WELCH
by Gardner Denver

Operation Manual (EN)
Translation of the german original manual

Scroll pumps

Models:

► scrollvac S 10

► scrollvac S 15

460004
2017-02-15

Gardner Denver Thomas GmbH
Am Vogelherd 20
98693 Ilmenau
Germany
T +49 3677 604 0
F +49 3677 604 131
welch.emea@gardnerdenver.com
www.welchvacuum.com

Customer Support +49 3677 604 0

We are constantly working on the further development of all our product types.

Reprinting or reproduction of this manual, including extracts, is not allowed without the prior written permission of Co. Gardner Denver Thomas GmbH.

All rights under the copyright laws are expressly reserved by Co. Gardner Denver Thomas GmbH.

We reserve the right to make changes and amendments.

Contents

1 Important Information ... 4
1.1 General Information ... 4
1.2 Target Groups ... 4
1.3 Intended Use ... 4
1.4 Use for an Unauthorized Purpose ... 4
1.5 Safety Devices ... 5
1.6 Meaning of the Warning notes ... 5
1.7 Product Standards, Safety Regulations ... 5
2 Basic Safety Instructions ... 6
2.1 General Information ... 6
2.2 Electricity ... 6
2.3 Mechanical Systems ... 6
2.4 Hazardous Substances ... 7
2.5 High Temperatures ... 7
3 Description ... 8
3.1 Design ... 8
3.2 Area of Application ... 9
3.3 Function ... 9
3.3.1 Working Principle ... 9
3.3.2 Vapour pressure tolerance ... 10
3.3.3 Dry-running sealing and sealing systems ... 10
3.3.4 Basic chemical resistance ... 10
3.4 Standard accessories ... 11
3.4.1 Overview and order numbers ... 11
3.4.2 Intake filter, helium tight OMEH 30/25 ... 12
3.4.3 Condensate separator PT 25 ... 12
3.4.4 Condenser SKS 40/25 ... 12
3.4.5 Cooling Trap welded and dismounted ... 12
3.4.6 Vacuum valves ... 12
3.5 Scope of Delivery ... 12
4 Technical Data ... 13
4.1 View of device and dimensions ... 13
4.2 Intake Pressure / Pumping Speed – Diagram ... 14
4.3 Device data ... 14
5 Installation and Operation ... 15
5.1 Unpacking ... 15
5.2 General references ... 15
5.3 Installation and Connection ... 15
5.4 Connecting to the electricity supply ... 16
5.4.1 Type of motor protection ... 16
5.4.2 Selection of the protection ... 16
5.5 Operation ... 17
5.5.1 Starting-up ... 17
5.5.2 Operation to pump out condensable vapours ... 17
5.5.2.1 Resistance chart ... 18
5.5.3 Closing down ... 18
5.6 Storage ... 18
5.7 Scrap Disposal ... 18
6 Maintenance and Servicing ... 19
6.1 Maintenance Performed by the User ... 19
6.1.1 Replacing the special sliding seals ... 19
6.2 Maintenance by the Manufacturer ... 20
6.3 Damage Report ... 20
7 Troubleshooting ... 21
8 Overview of spare parts ... 22
8.1 Service kit ... 22
8.2 View of spare part ... 23
8.2.1 List of spare parts ... 24

EC Declaration of Conformity

1 Important Information

1.1 General Information

The Scroll Pumps conform to the following directives:

2006 / 42 / EC	Machinery Directive
2014 / 30 / EU	Electromagnetic Compatibility Directive

The CE sign is located on the rating plate. Observe the binding national and local regulations when fitting the pump into installations!

Our products are sold worldwide and can therefore be equipped with the typical national plugs and for the various voltages. You will find more information about the available pump designs on our web page in the internet.

1.2 Target Groups

This Operating Manual is intended for the personnel planning, operating and maintaining Scroll Pumps.

This group of people includes:

- Designers and fitters of vacuum apparatus,
- Employees working on commercial laboratory and industrial vacuum technology applications and
- Service personnel for scroll pumps.

The personnel operating and maintaining the rotary vane pumps must have the technical competence required to perform the work that has to be done.
The user must authorize the operating personnel to do the work that has to be done.
The personnel must have read and understood the complete Operating Manual before using the rotary vane pumps.
The Operating Manual must be kept at the place of use and be available to the personnel when required.

1.3 Intended Use

- The layout of the scroll pump must be appropriate for the conditions of use. The user bears the sole responsibility for this.
- The scroll pump may only be operated under the conditions stated
  - in the "Technical Data" section,
  - on the type plate, and
  - in the technical specification for the order concerned.

1.4 Use for an Unauthorized Purpose

It is forbidden to use the pump for applications deviating from the technical data stated on the type plate or the conditions stated in the supply contract, or to operate it with missing or defective protective devices.

1.5 Safety Devices

Measures such as the following are for the safety of the operating personnel:

- electrical connection with a protective conductor (operating mode S1) and an earthing plug,
- Motor protection switch (thermal) and
- “Hot Surface" label on the pump body - warning notice

The scroll pump must not be operated without these elements.

1.6 Meaning of the Warning notes

Take note of the warning notes. They are in the following box:

	CAUTION ! / WARNING !
Hazard which may lead to serious injuries or material damage.	

1.7 Product Standards, Safety Regulations

Scroll Pumps meet the following product standards:

DIN EN ISO 12100:2011-03	Safety of machinery - General principles for design - Risk assessment and risk reduction
DIN EN ISO 13857:2008-06	Safety of machinery - Safety distances to prevent hazard zones being reached by upper and lower limbs
DIN EN 1012-2:2011-12	Compressors and vacuum pumps - Safety requirements - Part 2: Vacuum pumps
DIN EN ISO 2151:2009-01	Acoustics - Noise test code for compressors and vacuum pumps - Engineering method (grade 2)
DIN EN 60204-1:2014-10	Safety of machinery - Electrical equipment of machines - Part 1: General requirements
DIN EN 61000-6-2:2011-06 **DIN EN 61000-6-4:2011-09**	Electromagnetic compatibility (EMC) - Part 6-2: Generic standards - Immunity for industrial environments Part 6-4: Generic standards - Emission standard for industrial environments
DIN EN 61010-1/A1:2015-04	Safety requirements for electrical equipment for measurement, control and laboratory use - Part 1: General requirements
DIN EN 50110-1:2014-02	Operation of electrical installations
Directive 2012/19/EU	Electrical and electronics - old devices (WEEE)
Directive 2011/65/EU	Dangerous materials in electrical and electronics devices (RoHS II)
China - RoHS II	Environment protection law - China 2016-01

The following additional safety regulations apply in the FR Germany:

BGV A3	Electrical equipment and operating materials
VBG 5	Power-driven machines
BGR 120	Guidelines for laboratories
BGI 798	Hazard assessment in the laboratory
BGG 919 (VBG 16)	Accident prevention regulations for "compressors"
BGR 189 (BGR 195;192;197)	Use of protective working clothes

Observe the standards and regulations applying in your country when you use the scroll pumps.

2 Basic Safety Instructions

2.1 General Information

Warning notices must be observed. Disregarding them may lead to damage to health and property.

The scroll sumps must be operated by personnel who can detect impending dangers and take action to prevent them from materialising.

The manufacturer or authorized authorised workshops will only service or maintain the scroll pump if it is accompanied by a fully completed damage report. Precise information about the contamination (also negative information if necessary) and thorough cleaning of the Scroll Pump are legally binding parts of the contract.

Contaminated scroll pumps and their individual parts must be disposed of in accordance with the legal regulations.

The local regulations apply in foreign countries.

2.2 Electricity

Scroll pumps of operation mode S1 are supplied. Please note that the testing must be repeated in accordance with DIN EN 0105, DIN EN 0702 and BGV A 2 in case of portable devices of operation mode S1.

The local regulations apply in foreign countries.

Please note the following when connecting to the electrical power supply system:

- The electrical power supply system must have a protective connector according to DIN VDE 0100-410 (IEC 60364-4-41).
- The protective connector must not have any breaks.
- The connecting cable must not be damaged.

2.3 Mechanical Systems

Improper use can lead to injuries or material damage. Observe the following instructions:

- Only operate the scroll pumps with the specified flange-mounting components.
- Hazardous substances must be separated out as far as this is technically possible before they reach the pump.
- External mechanical stresses and vibrations must not be transmitted to the pump. Only use flexible vacuum hoses for connecting scroll sumps.
- The pump must not be used to suck up fluids. Lay the exhaust pipe so that it slopes downwards, so allowing condensate to flow out of the pump. Collect the condensate and dispose of it in an environmentally compatible manner.
- Maintain a space of least 20 cm between the pump and adjacent parts in order to enable the pump to cool.

⚠	**CAUTION !**
Solid particles in the pumping medium impair the pumping action and can lead to damage. Prevent solid particles penetrating into the pump!	

2.4 Hazardous Substances

The operating company bears the responsibility for the use of the scroll pump.

Hazardous substances in the gases to be pumped can cause personal injuries and property damage. Pay attention to the warning notices for handling hazardous substances.

The local regulations apply in foreign countries.

Combustible Gases

Examine before switching on whether that can form gas combustible gas/air mixtures which can be promoted! Consider the regulations of the guideline 1999/92 EC.

Aggressive gases or vapours

As indicated in the resistance chart *in chapter 5.5.2.1*, scroll pumps are conditionally suitable for pumping aggressive gases or vapours.

Poisonous gases

Use a separator when pumping poisonous or harmful gases. Prevent such substances from leaking out of the appliance or pump. Treat these substances according to the applicable environmental protection regulations.

Test the strength and leak-tightness of the connecting lines and the connected apparatus. Prevent environmental poisons, e.g. mercury, getting into the scroll pumps.

Fulfil the requirements, for example:

- German Hazardous Substances Regulation (GefStoffV) of 01. December 2010
- Regulations 2016/1179/EU
  (classification, packaging and identification of hazardous substances),
- Manufacturer's safety data sheets on hazardous substances.

2.5 High Temperatures

The scroll pump may heat up as a result of the temperature of the gas being pumped and through intrinsic heating. The temperature of the scroll pump heads can reach 50 °C during operation.

Prevent the following maximum permissible temperatures from being exceeded.

- + 40 °C for the environment, and
- + 20 °C for the gas to be pumped.

The motor is protected against overload by a protective switch.

3 Description

3.1 Design

Scroll Pumps models **scrollvac S 10** and **scrollvac S 15** a dry-running vacuum pump in spiral design. The pumping speed is 10 $m^3 \cdot h^{-1}$ and/or 15 $m^3 \cdot h^{-1}$.

The pump drive with a special-purpose built-in motor is flanged directly to the pump casing top part. The scroll rotor is fastened to the solid motor or pump shaft which runs on anti-friction bearings. The stationary counter spiral to the scroll rotor is located in the stator. A fan located under the stator is used for cooling.

The entire pump consisting of drive, pump casing top part, and stator is mounted vertically to the plastic base and its recessed handles.

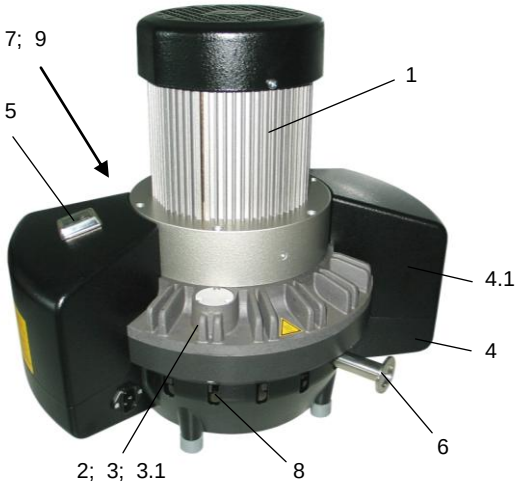

Fig. 1 Scroll pump

1	-	Drive
2	-	Pump casing - upper part
3	-	Stator complete
3.1	-	Fan
4	-	Foot complete
4.1	-	Recessed grips
5	-	On / Off switch
6	-	Exhaust port (pressure)
7	-	Intake port
8	-	Screw plug for inert gas connection (gas ballast)
9	-	Type plate

The Scroll pump has the following features:

- Compact vertical design
- silent and low-vibration operation
- continuous operation even with high intake pressures
- Intake and exhaust ports are designed with small flanges according to DIN 28403
- Important parts are easy to service and replace

Special features :

- The vertical design and the omission of the working valve or exhaust valve ensure the smooth drainage of any condensate forming inside the pump, thus avoiding damage to the pump.
- A specific surface coating of the parts which are in contact with the fluid guarantees that the pump has a basic chemical resistance as specified in the resistance chart *in chapter 5.5.2.1.* In addition, the coating provides the required sliding properties in combination with the sealing strip inserted at the front side of the spirals.
- All static seals (e.g., O-rings) are made of either FKM or EPDM.

3.2 Area of Application

The field of application covered by the dry-running scroll pump covers the whole range of vacuum technology both in laboratory and in industrial applications.

The function of the scroll pump is to generate an ultimate pressure of up to $7 \cdot 10^{-2}$ mbar

- either as a single pump, or
- as a fore-pump for turbo-molecular pumps.

The scroll pump can be used to pump biological, toxic, and radioactive gases or vapours as indicated in the resistance chart *in chapter 5.5.2.1*, and evacuate containers or vacuum systems up to the high vacuum range.

⚠	**CAUTION !**
The scroll pump must <u>not</u> be used for extracting explosive gases or vapours. **The scroll pump must <u>not</u> be operated in rooms which might contain explosive gases and vapours!**	

3.3 Function

3.3.1 Working Principle

The stationary spiral (stator) and the driven spiral (scroll rotor) mesh, forming sickle-shaped pump chambers which are diminished continuously from the outer inlet (suction port) to the inner outlet (exhaust port) by the scroll rotor's gyroscope movement, thus compressing the gas they hold and pushing it out.

Two pumping cycles are performed per revolution.

Fig. 2 Working principle of the Scroll pump

3.3.2 Vapour pressure tolerance

The scroll pump has a vapour pressure tolerance of 50 mbar (measured for water). This is a very good value for scroll pumps, and it has been achieved by the following design features:

- **Vertical installation of drive or pump shaft, and consequent horizontal position of scroll or pump rotor:**
  Any condensates which might accumulate in the pump can drain without any problem from the stator and rotor system through the discharge port.

- **No working valve or exhaust valve:**
  Vapours can pass freely through the discharge port without being condensated by the opening pressure of an upstream exhaust valve.

- **Gas ballast system:**
  The condensation of vapours is reduced by feeding in ambient air (gas ballast) during the compression process. Inert gases (N_2, Ar) can be used as gas ballast for special applications. The scroll pump is always working with gas ballast.

´

3.3.3 Dry-running sealing and sealing systems

The dry-running sealing of the rotor-stator arrangement is obtained both by the coating of the metal parts, and by a special sealing strip. An optimum match is achieved between both friction partners in this combination.
The sealing system consists of the spiral-shaped sealing strip used to pack the pump chambers, and of two closed sealing strips for sealing the bearings and the casing space.

3.3.4 Basic chemical resistance

The selected type of coating and the sealing strip material provide the scroll pump with a basic chemical resistance as specified in the resistance chart, *chapter 5.5.2.1*.

3.4 Standard accessories

3.4.1 Overview and order numbers

Description	Order no.
OMEH 30/25 Suction filter, helium tight	700012-01
PT 25 Condensate separator	700145
SKS 40/25 Condenser	700066
Cooling Trap welded DN 25 KF	705121
Cooling Trap dismounted DN 25 KF	705102
VA 25 HS HV angle valve DN 25 KF manual - with screw spindle stainless steel	700101
VA 25 HE HV Angle valve DN 25 KF manual - with eccentric stainless steel	700102
VS 25 HS HV Straight-trough valve DN 25 KF manual - with screw spindle stainless steel	700104
VS 25 HE HV Straight-trough valve DN 25 KF manual - with eccentric stainless steel	700105
VA 25 PE HV Angle valve DN 25 KF electropneumatic 24 VDC stainless steel	700361
VA 25 PA HV Angle valve DN 25 KF electropneumatic 24 VDC aluminium	700366
VA 25 ME HV Angle valve DN 25 KF electromagnetic 80-250 V, 50/60 Hz stainless steel	700371
VA 25 MA HV Angle valve DN 25 KF electromagnetic 80-250 V, 50/60 Hz aluminium	700374
VS 25 PE HV Straight-trough valve DN 25 KF electropneumatic 24 VDC stainless steel	700377

3.4.2 Intake filter, helium tight OMEH 30/25

The intake filter should be flanged directly to the pump's intake port if there is any particulate pollution (dust) on the suction side. Please note that the filter's flow resistance will reduce the pumping speed, and that this effect will be even stronger as particulate load increases. Accordingly, this filter requires continuous servicing when used. Ensure that no moisture penetrates into the filter.
If the OMEH 30/25 is used as suction-side filters, then it is to be installed against the appropriate direction of arrow.

3.4.3 Condensate separator PT 25

A condensate separator must be flanged to the intake port in order to protect the pump against the direct intake of liquid droplets. The connection of a condensate separator to the delivery side is useful whenever there is a risk of condensate return flow from the exhaust pipe into the pump. Use the DN 25 small flange elbow joint, purchase *order number 701443*, to enable the condensate separator to be flanged directly to either the intake port or the discharge port of the pump in the condensate separator's position of normal use.

3.4.4 Condenser SKS 40/25

Condensate formation in the pump chambers is inevitable whenever the vapour pressure tolerance of the pump (50 mbar for water) is exceeded during the vacuum process. Vapours must be condensated completely on the upstream side in order to avoid this effect. Condensers are used for substances which present a high vapour pressure (e.g., for solvents), i.e., in an operating pressure range of > 1 mbar.
The condenser's design prevents it from being flanged directly to the scroll pump, and it should be integrated into the suction line for this reason.

3.4.5 Cooling Trap welded and dismounted

Fluids with a low vapour pressure within the operating range of < 1 mbar should be frozen or condensated completely by cold traps as the scroll pump itself will hardly be able to expulse these fluids. Cold traps should be installed between two vacuum valves in the suction line.

3.4.6 Vacuum valves

The scroll pump does not have any integrated intake port valve so that the intake port or the connected vacuum appliance will be ventilated whenever the pump is turned off. To prevent this, it is useful to connect a vacuum valve directly to the intake port of

3.5 Scope of Delivery

The scope of delivery is specified in the supply contract.

4 Technical Data

4.1 View of device and dimensions

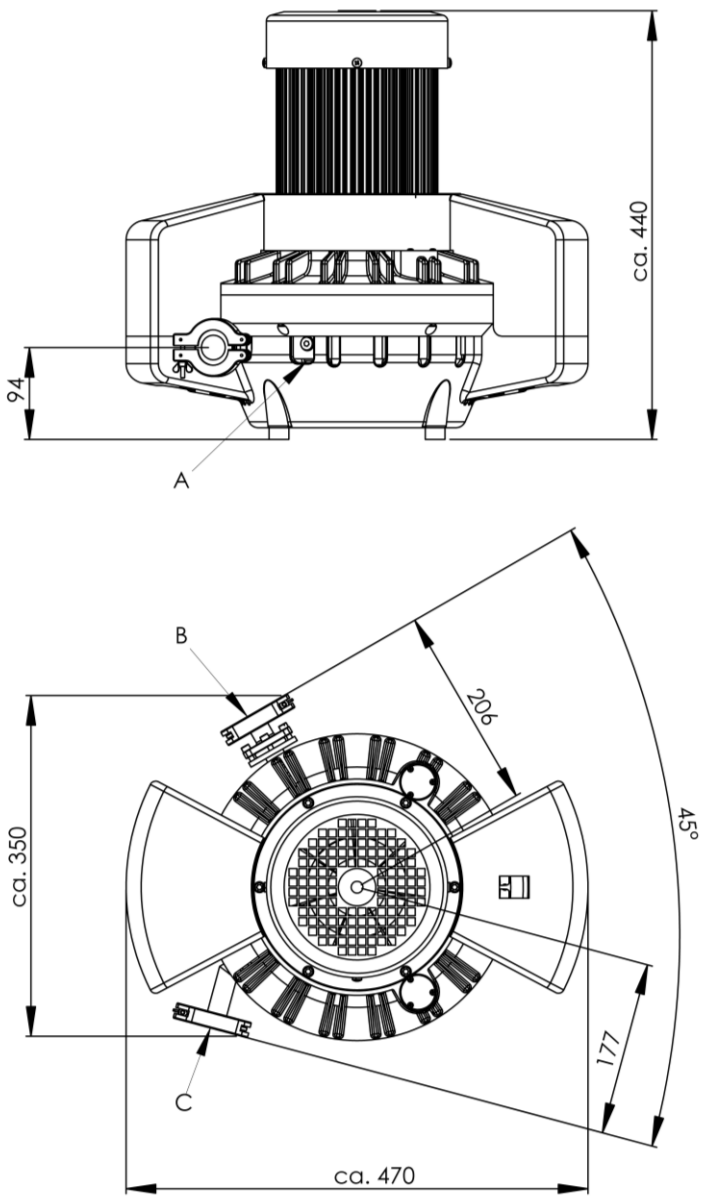

A	-	Gas ballast valve - setup
B	-	Exhaust connection DN 25 KF
C	-	Intake connection DN 25 KF

Fig. 3 View of device and dimensions

The information presented in this material is based on technical data and test results of nominal units. It is believed to be accurate and reliable and is offered as and aid to help in the selection of products.
It is the responsibility of the user to determine the suitability of the product for the intended use and the user assumes all risk and liability whatsoever in connection therewith. Gardner Denver Thomas GmbH does not warrant, guarantee or assume any obligation or liability in connection with this information.

4.2 Intake Pressure / Pumping Speed – Diagram

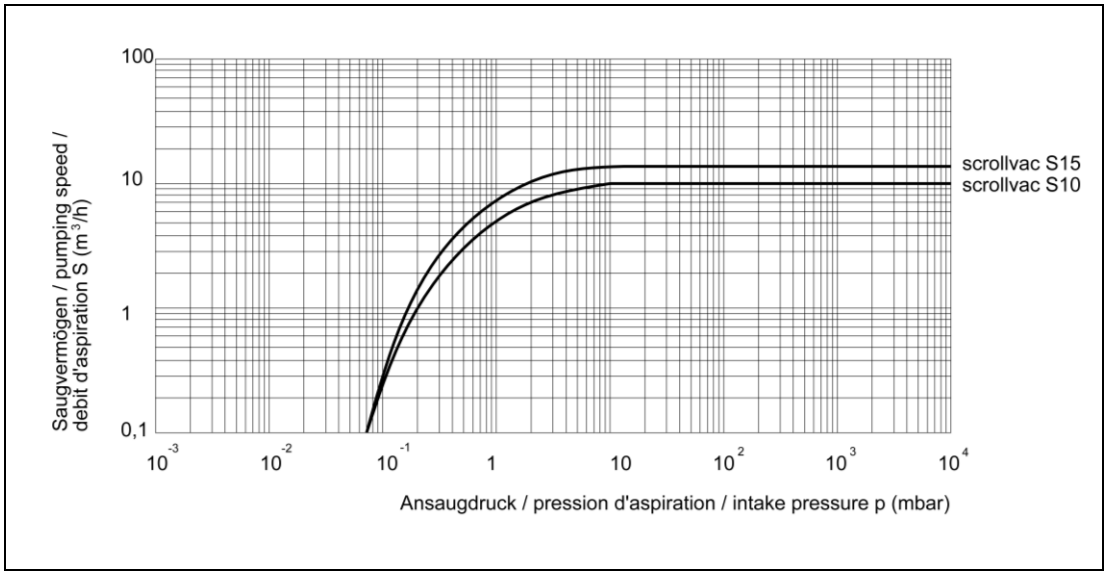

Fig. 4 Intake Pressure / Pumping Speed - Diagram

4.3 Device data

Parameter	Unit	scrollvac S 10	scrollvac S 15
Pumping speed 50/60 Hz nominal	$m^3 / \cdot h^{-1}$	10.7 / 12.4	15.3 / 18.4
Pumping speed 50/60 Hz pneurop, DIN 28426 part 1		9.5 / 11.2	14.5 / 17.2
Ultimate pressure with rated speed 1500/min (50 Hz) to DIN 28426	mbar	7×10^{-2}	7×10^{-2}
Ultimate pressure with gas ballast total		1×10^{-1}	1×10^{-1}
Max. inlet pressure	bar	1	1
Max. outlet pressure		1	1
Connection flanges	-	DN 25 KF	DN 25 KF
Max. ambient temperature	°C	+ 40	+ 40
Max. operating gas temperature		+ 40	+ 40
Reference surface sound pressure level DIN EN ISO 2151	dB (A)	< 60	< 60
Water vapour tolerance	mbar	50	50
Voltage / Frequency (Different data upon customer request)	V, Hz	115/230, 50/60	115/230, 50/60
Motor power	kW	0.55	0.55
Operating mode	-	S 1	S 1
Type of protection DIN EN 60529		IP 54	IP 54
Class of insulation DIN EN 600034-1		F (160°C)	F (160°C)
Dimension (W/D/H)	mm	470 / 320 / 440	470 / 320 / 440
Weight approx.	kg	30	30
Order numbers	-	**460004**	**460005**

5 Installation and Operation

5.1 Unpacking

Carefully unpack the scroll pump.

Check the pump for:

- Transport damage,
- Conformity with the specifications of the supply contract (model, electrical supply data),
- Completeness of the delivery.

Please inform us without delay if there are discrepancies between the delivery and the contractually agreed scope of delivery, or if damage is detected.
Please take note of the general terms of business of the manufacturing firm.
In case of a claim under warranty, the device must be returned in packaging that is suitable for protecting it during transport.

5.2 General references

According to its intended use the capacity of the scroll pump depends on:

- the kind of assembly
- accessories
- vacuum piping system

In addition, fail-safe operation is determined by the mode of maintenance.
Elements such as valves, filters, condensers a.s.o. should be provided as early as in the conception.
The materials of the vacuum piping should be selected in such a way that they will be resistant to the media to be delivered!

5.3 Installation and Connection

1. Install the scroll pump on a flat and solid surface.
2. Remove the protective caps on the intake and exhaust ports.
3. Connect the vacuum connection to the intake port, and the exhaust pipe to the discharge port.

⚠	**WARNING !**
Be sure not to mix up intake port and discharge port at the wrong connections! **To ensure a maximum delivery rate, the suction pipe's inside diameter must be not less than 25 mm, and the line must be as short as possible.**	

4. Connect the scroll pump to the electrical supply.
5. Regularly check and clean the air inlet of the motor ventilator.
6. The structural elements used on the inlet and outlet sides must be resistant to the media to the pumped. The pressure on the outlet side must not exceed 0.1 bar (ü)!
7. A pressure that is slightly below the air pressure helps to avoid pollution of gases, and reduces corrosion.

5.4 Connecting to the electricity supply

The scroll pump is supplied with complete electrical wiring. It is connected via an appliance cable and a power supply plug.

⚠	**CAUTION !**
Should the user change the electrical connection, for example for fitting into a system, then this may only be performed by a electronics expert under observance of the accident prevention regulations.	

It is generally suggested to protect the motor by 120 per cent of is rated power in consideration of the starting and switch-on response.

5.4.1 Type of motor protection

Motor protective switches with bimetal interrupter contacts or protective relays are used.
All A.C. motors are provided with a thermal overload protection ex works, protecting the motor and vacuum pump from damage or destruction, respectively.

5.4.2 Selection of the protection

When selecting the protection two operating phases should be taken into consideration:

- Switch-on
- Continuous operation

The following values are approximate values and may vary.

Switch-on:
The motor rating is substantially higher.
After starting at a low ambient temperature (< 18 °C), the operating temperature may remain within the starting power range for another 10 to 20 minutes until the vacuum pump has run hot.

Starting power	5 to 7- fold of the rated power value
Operation power	2- fold of the rated power value

Continuous operation:
Power consumption is either slightly above or below the specified nominal current when the scroll pump has warmed up, depending on the intake pressure.

5.5 Operation

	CAUTION !
Observe the basic safety instructions when using the pump.	

5.5.1 Starting-up

Press the power switch to start the scroll pump when it has been fully installed both to the power supply and to the vacuum network.

	CAUTION !
Ambient temperature is 5° C to 40° C. **The lowest start-up temperature is specified at 5° C.**	

5.5.2 Operation to pump out condensable vapours

- The scroll pump must have reached its operating temperature of 50° C before any condensable vapours can be evacuated. This operating temperature corresponds to an exhaust gas temperature (gas ballast) of approx. 70° C.

	CAUTION !
The scroll pump must warm up while the intake port is closed for approximately 30 min at an ambient temperature of about 20° C before the evacuation of condensable vapours can be started.	

- Avoid any overpressure at the discharge port or in the exhaust pipe. To avoid this, make sure that
  - the line does not include any extreme reductions in cross-section;
  - vertical pipe routing is avoided as condensate may flow back from the line to the pump otherwise; a condensate separator is whenever this cannot be avoided;
  - a separate vapour extraction is installed when large amounts of vapour occur especially in collector exhaust pipes.
- The pump must not be shut down and cool down when the vacuum process is terminated but it must be regenerated, i.e., the rests of the fluid pumped before must be expelled.

	CAUTION !
After pumping condensable vapours, the scroll pump must keep running for another 30 to 60 min approximately, while keeping the intake port closed.	

- The pump must be protected either by a condenser, or by a cooling trap *(see chapters 3.4.4 and 3.4.5)* whenever the pump cannot deliver the vapour amounts produced during the vacuum process without generating condensation.

5.5.2.1 Resistance chart

The scroll pump is resistant to the following chemicals:

- acetone	- isopropanol
- acrylic acid	- methanol
- benzene	- toluene
- chloroform	- methylbenzene
- ethanol	- trifluoroacetic acid
- ethylene	- water

5.5.3 Closing down

In normal use, it is sufficient to switch the scroll pump off electrically. Additional measures are not required.

Whenever condensable vapours are pumped, the pump must be kept running while the intake port is closed for another 30 to 60 minutes, approximately, after pumping is complete *(according to chapter 5.5.2)*.

Disconnect the pump from the power supply whenever it is shut down for a longer period of time. Close the connecting ports.

5.6 Storage

The pumps are to be stored in a low-dust, interior room within the temperature range from + 5 to + 40 °C and at a relative air humidity < 90%.

Leave the protective elements on the intake and exhaust ports. Another equally good protection may be used.

5.7 Scrap Disposal

	CAUTION !
The scroll pumps must be disposed of in accordance with the 2012/19/EU guideline and the specific national regulations. **Contaminated scroll pumps must be decontaminated according to the laws.**	

6 Maintenance and Servicing

6.1 Maintenance Performed by the User

The maintenance of the scroll pump is limited to replacing the special sliding seals under normal operating conditions, i.e., when air or inert gas is pumped.

⚠	**CAUTION !**
Only perform the work that is described here, and that which is permitted to be done by the user. **All other maintenance and service work may only be performed by the manufacturer or a dealer authorized by him.** **Beware of the pump parts being possibly contaminated by hazardous substances. Wear protective clothing if there is contamination.**	

6.1.1 Replacing the special sliding seals

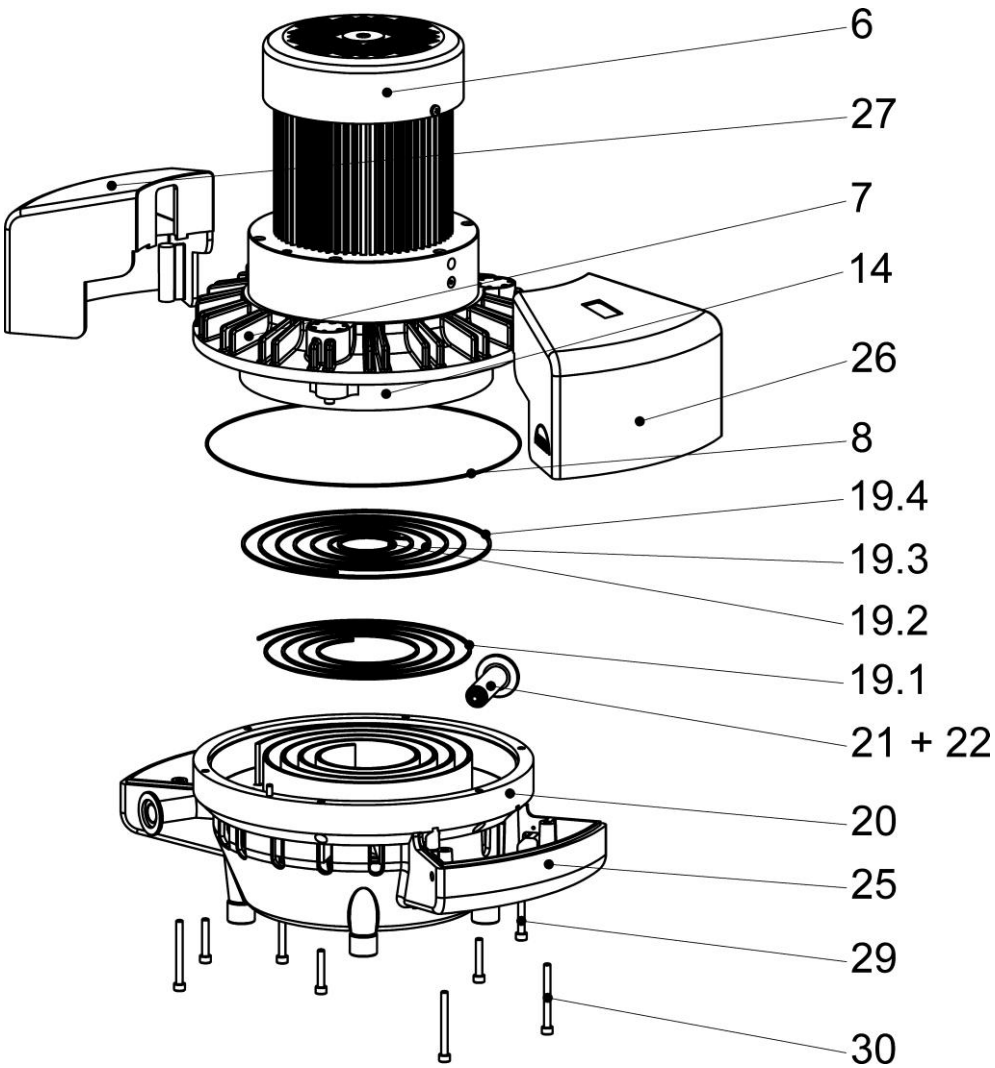

Fig. 5 Replacing the special sliding seals

Sequence :

1.	Switch off the pump, disconnect the pump from the power supply, and wait for the pump to cool down to room temperature.
2.	Carefully turn the pump around, and put it on the motor (motor fan) **(6)**.
3.	Unscrew 4 screws **(30)**, and remove the recessed handles **(26; 27)**.
4.	Unscrew the discharge port **(21)** with the O-ring **(22)**.
5.	Unscrew 6 screws **(29)**, and remove the stator **(20)** with foot **(25)**. Turn the stator **(20)** around, and put it down on the foot **(25)**.
6.	When removing the stator **(20)**, make sure that the O-ring **(8)** remains in the guiding grooves of the pump casing **(7)**.
7.	Remove the sliding seals **(19.1; 19.2; 19.3; 19.4)** from the grooves.
8.	Check whether there is any foreign material in the spirals or in the grooves.
9.	Clean the inside of stator **(20)**, and the pump casing **(7)** with the pump rotor **(14)**, using a soft, dry and lint-free cloth.
10.	Insert new sliding seals into the grooves provided for the sliding seals.
11.	Position and screw the stator **(20)** with foot **(25)** onto the pump casing **(7)** with the motor again. The precise position of stator to pump casing is set using a locating pin. When positioning the stator, make sure that the inserted sliding seal does not fall out again.
12.	Proceed in reverse order for assembly from now on.
13.	When it is completely assembled again, the scroll pump must run in with a closed intake port for approximately 1 hour. Ultimate pressure must be checked after this.

6.2 Maintenance by the Manufacturer

Repairs and maintenance going beyond the extent of the work described *in chapter 6.1* or reconditioning or modification may only be performed by the manufacturer or authorized workshops.
The prerequisites for a handover are a complete and factually correct damage report, and a clean pump.
Motor, pump casing, stator, base, and recessed handles must be cleaned whenever radioactive matter or fluids hazardous to human health or to the environment are pumped.

WARNING !

The user shall be liable for the consequences of an incorrect damage report or a contaminated pump. The statements in the damage report are legally binding.

6.3 Damage Report

You find the form of the damage report to the Download on our web page in the menu "service" and "Downloads". www.welchvacuum.com
If you should not have an entrance to the Internet, you can request the form also gladly with us, under phone +49 3677 604 0.

WARNING !

Incomplete or incorrectly completed damage reports may endanger the service personnel!
Provide full information about contamination, and clean the pump thoroughly before handing it over to third parties.

7 Troubleshooting

During the warranty period, intervention in the diaphragm pumps and accessory components may only be made by the manufacturing firm.

Trouble	Cause	Remedy	
		by:	***with:***
Vacuum pump does not start	No power supply	***Qualified electrician***	Check electrical installation
	Drive (Motor) defective	***Service workshop***	Exchange
Vacuum pump does not generate a vacuum or only an inadequate one	Connected apparatus, connecting elements and/or seals leaking	***User or Service workshop***	Identify and seal the leak, replace the seals if necessary, *as described in chapter 6.1.1*
	Vacuum pump dirty		General maintenance / cleaning
Running noise	Vacuum pump dirty		General maintenance / cleaning
Cable	defective and/or brittle	***Qualified electrician***	Exchange of the cable

8 Overview of spare parts

The spare parts lists contain all the spare parts and all the information necessary for ordering.

When ordering, please quote the description, quantity, serial number and order number!

⚠	**CAUTION !**
We are not liable for any damage caused by the installation of any parts not supplied by the manufacturer.	

8.1 Service kit

Order no. 402201

Description	Piece	Order no.
Sliding seal	1	460531
O-Ring ∅ 285 x 2	1	829346

8.2 View of spare part

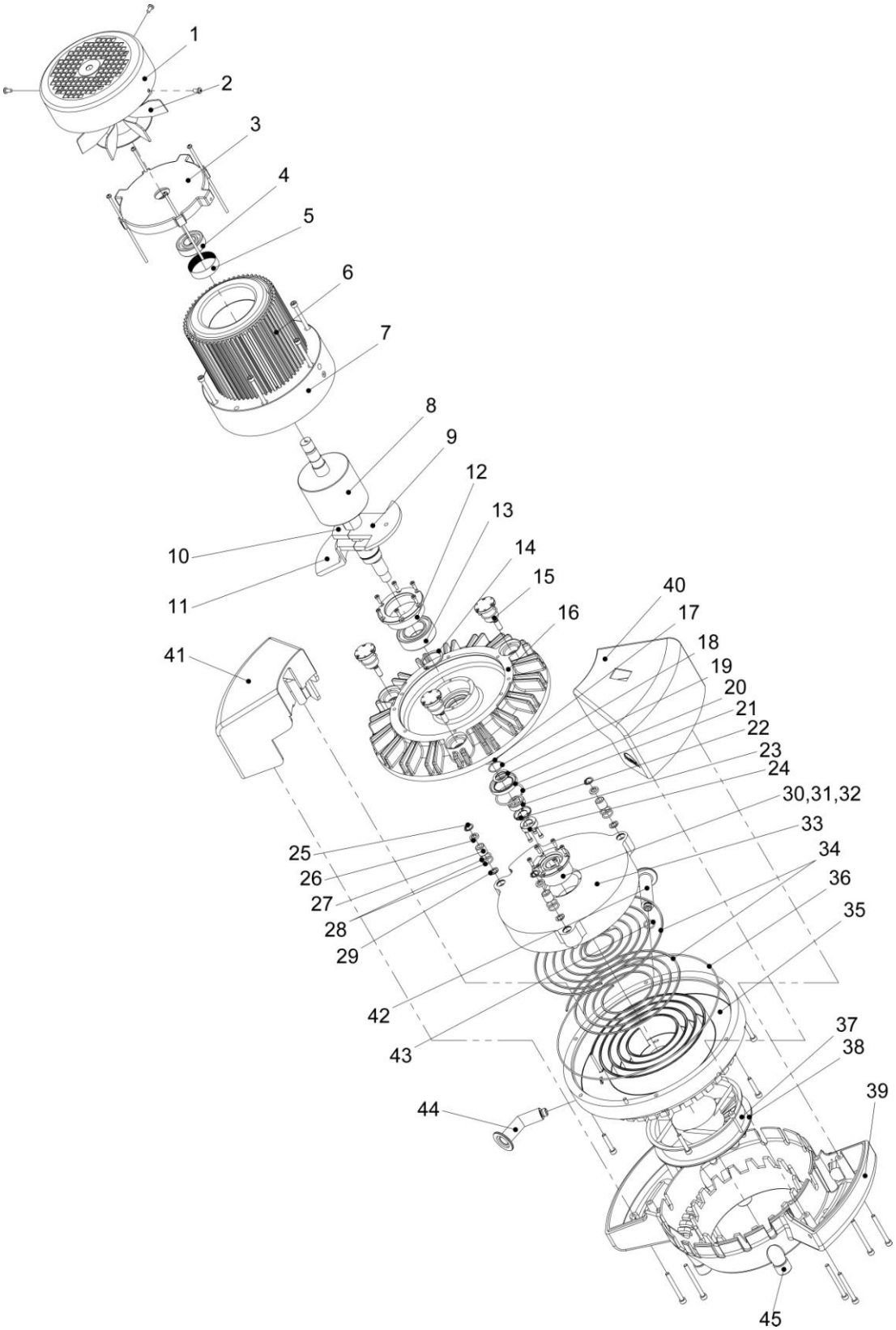

Fig. 6 Exploded view - scroll pump

8.2.1 List of spare parts

⚠	**CAUTION !**
Only those spare parts marked with an (*) may be fitted by the customer.	

Pos. No.	Description	Piece	scrollvac S 10	scrollvac S 15
1	Fan cover	1	460534-10 *	460534-10 *
2	Fan	1	826477-02 *	826477-02 *
-	**Motor casing complete** *consisting of position: 3 – 7*	**1**	**460538**	**460538**
3	- End shield, B-bearing	1	460504	460504
4	- Grooved ball bearing 20 x 47 x 14	1	824961	824961
5	- Tolerance sleeve	1	825781	825781
6	- Motor 100/115/230V; 50/60Hz; 0,55kW	1	826477-1	826477-1
7	- Motor support	1	460505	460505
-	**Pump casing - upper part complete** *consisting of position: 8 – 34*	**1**	**460511-01**	**460511-01**
8	- Main eccentric	1	826477-2	826477-2
9	- Balancing weight 2	1	460509-01	460509-01
10	- Balancing weight 1+2	2	460508	460508
11	- Balancing weight 1	1	460507-01	460507-01
12	- Main bearing clamping sleeve	1	460510	460510
13	- Skew-angle roller bearing	1	824969	824969
14	- Safety ring 35 x 1,5	1	824831	824831
15	- Eccentric assembly	3	460542	460542
16	- Casing cover	1	460512	460512
17	- Support sleeve	1	460532	460532
18	- Waved spring washer (round wire) 25,4	1	824677	824677
19	- Close tolerance spacer 20 x 28 x 1	1	824957-2	824957-2
20	- Shaft seal ring ∅ 32 x 47 x 6	1	829407	829407
21	- Retaining ring	1	824846	824846
22	- Safety nut part 1	1	460519	460519
23	- Sealing ring for safety nut	1	460519-01	460519-01
24	- Safety nut part 2	1	460520	460520
25	- Safety ring 15 x 1	3	824830	824830
26	- Shaft seal ring ∅ 8 x 15 x 3	3	829410	829410
27	- Needle roller bearing without inner ring	3	824966	824966
28	- O-Ring ∅ 15 x 2	9	829311-1	829311-1
29	- Finger spring washer 15,11	3	824675-02	824675-02
30	- Rotor bearing clamping sleeve	1	460518	460518
31	- Skew-angle roller bearing 20 x 47 x 14	1	824969-1	824969-1
32	- Grooved ball bearing 20 x 47 x 14	1	824961-1	824961-1
33	- Rotor	1	460516-01	460516-01
34	- Seal	1	460531 *	460531 *
35	Stator	1	460522-01	460522-01
36	O-Ring ∅ 285 x 2	1	829346 *	829346 *
37	Axial-flow fan 24V DC	1	829816	829816
38	Guard for axial-flow fan	1	829821-01	829821-01
39	Foot	1	460528-10 *	460528-10 *
40	Handle 1	1	460529-10 *	460529-10 *
41	Handle 2	1	460530-10 *	460530-10 *
42	Exhaust (Pressure port)	1	460523 *	460523 *
43	O-Ring EPDM ∅ 12 x 2	1	829217-3	829217-3
44	Suction port	1	460524	460524
45	Rubber metal-pad	4	829141-2 *	829141-2 *
-	Mains connection cable IEC with plug CEE (D) L=1.5 m	1	825885	825885
	Mains connection cable IEC with plug BS (UK) L=1.5 m	1	825878	825878
	Mains connection cable IEC with plug NEMA 5-15 (US) L=2.5 m	1	825903	825903

EG - Konformitätserklärung

EC Declaration of Conformity / *CE Déclaration de Conformité*

DIN EN ISO / IEC 17050

(de) **Hiermit erklären wir**	WELCH by Gardner Denver	**Gardner Denver Thomas GmbH** Am Vogelherd 20 98693 Ilmenau Germany	T +49 3677 604 0 F +49 3677 604 131 welch.emea@gardnerdenver.com www.welchvacuum.com

unter eigener Verantwortung, dass nachstehendes Produkt aufgrund seiner Konzipierung und Bauart sowie in den von uns in Verkehr gebrachten Unterlagen den nachfolgend aufgeführten EG-Richtlinien und Normen entspricht.
Bei einer nicht mit uns abgestimmten Änderung des Produkts verliert diese Erklärung ihre Gültigkeit.

(en) We (Gardner Denver Thomas GmbH) herewith declare under our sole responsibility that the product described below is in accordance with the following Directives standards and other technical specifications regarding design and version when delivered from our factory.
This declaration becomes invalid whenever the product has been modified without our consent.

(fr) *Nous (Gardner Denver Thomas GmbH) certifions par la présente, que le produit décrit ci-après est conforme, tant dans sa conception que dans sa réalisation, aux normes de sécurité et d'hygiène exigées par les standards de la CE.*
En cas de modification du produit sans notre accord, cette déclaration devient caduque.

Bezeichnung des Produkts (Pumpen / Pumpstände) Description of product (pumps / pump systems) *Description du produit (pompes / pompe systèmes)*	**Scrollpumpen** / Scroll pumps / *Pompes à spirales* **scrollvac S 10, scrollvac S 15**
Artikel-Nr. / Fabrication No. / *No. de fabrication*	460004, 460005
Baujahr / Year of manufacture / *Annee de fabrication*	**2017**

Das Produkt entspricht folgenden Richtlinien und Normen: / The product is in conformity with the following Directives and standards: / *Le produit est conforme aux directives et standards suivants:*

X	**2006/42/EG**	**Maschinenrichtlinie** / EC machinery directive / *directive CE sur les machines* (17.05.2006)
	2014/34/EU	**ATEX-Richtlinie für Verwendungen in explosionsgefährdeten Bereichen, Anhang III** / ATEX Guideline for use in potentially explosive atmospheres, Appendix III / *ATEX Directive for applications in hazardous areas, Annex III*
X	**2014/30/EU**	**Elektromagnetische Verträglichkeit** / EC Electromagnetic Compatibility Directive / *Directive CE relative à la compatibilité électromagnétique*
X	**2011/65/EU**	**Gefährliche Stoffe in Elektro- und Elektronikgeräten (RoHS II) /** Dangerous materials in electrical and electronics devices (RoHS II) / *Substances dangereuses dans les appareils électriques et électroniques (RoHS II)*
X	**2012/19/EU**	**Elektro- und Elektronik - Altgeräte (WEEE)** / Electrical and electronics - old devices (WEEE) / *Électro et électronique - appareils de contralto (WEEE)*
X	**China – RoHS II**	**Umweltschutzgesetz** – China 2016-01 / Environment protection law / *Loi sur la protection de environnement*

Angewandte harmonisierte Normen: / Applied harmonized standards: / *Standards appliques et harmonises:*

	DIN EN 1127-1: 2011-10	**Explosionsfähige Atmosphären – Explosionsschutz - Teil 1: Grundlagen und Methodik** / Explosive atmospheres - Explosion prevention and protection - part 1: Basic concepts and methodology / *Atmosphères explosives - Protection contre les explosions - partie 1 : prescriptions et méthodologie*
	DIN EN 13463-1: 2009-07	**Nicht-elektrische Geräte für den Einsatz in explosionsgefährdeten Bereichen - Teil 1: Grundlagen und Anforderungen /** Non-electrical equipment for use in potentially explosive atmospheres - part 1: Basic method and requirements / *Appareils non électriques destinés à être utilisés en atmosphères explosibles - partie 1 : prescriptions et méthodologie*
	DIN EN 13463-5: 2011-10	**Nicht-elektrische Geräte für den Einsatz in explosionsgefährdeten Bereichen - Teil 5: Schutz durch konstruktive Sicherheit ‚c' /** Non-electrical equipment for use in potentially explosive atmospheres - part 5: Protection by constructional safety 'c' / *Appareils non électriques destinés à être utilisés en atmosphères explosibles - partie 5 : protection par sécurité de construction « c »*
X	**DIN EN ISO 12100: 2011-03**	**Sicherheit von Maschinen - Allgemeine Gestaltungsleitsätze Risikobeurteilung und Risikominderung /** Safety of machinery - General principles for design - Risk assessment and risk reduction / *Sécurité des machines - / Principes généraux pour l'évaluation des risques et la réduction des risques*
X	**DIN EN ISO 13857: 2008-06**	**Sicherheit von Maschinen - Sicherheitsabstände gegen das Erreichen von Gefährdungsbereichen mit den oberen und unteren Gliedmaßen** / Safety of machinery - Safety distances to prevent hazard zones being reached by upper and lower limbs / *Sécurité des machines - Distances de sécurité empêchant les membres supérieurs et inférieurs d'atteindre les zones dangereuses*
X	**DIN EN 1012-2: 2011-12**	**Kompressoren und Vakuumpumpen - Sicherheitsanforderungen - Teil 2: Vakuumpumpen** / Compressors and vacuum pumps - Safety requirements - part 2: Vacuum pumps / *Compresseurs et pompes à vide - Exigences de sécurité - partie 2: pompes à vide*
X	**DIN EN ISO 2151: 2009-01**	**Akustik - Geräuschmessnorm für Kompressoren und Vakuumpumpen - Verfahren der Genauigkeitsklasse 2** / Acoustics - Noise test code for compressors and vacuum pumps – Engineering method (grade 2) / *Acoustique - norme de mesure des émissions pour les compresseurs et les pompes à vide - Procédé de classe de précision 2*
X	**DIN EN 60204-1: 2014-10**	**Sicherheit von Maschinen - Elektrische Ausrüstung von Maschinen - Teil 1: Allgemeine Anforderungen** / Safety of machinery - Electrical equipment of machines - part 1: General requirements / *Sécurité des machines - Equipement électrique des machines - partie 1: Prescriptions générales*
X	**EN 61000-6-2: 2011-06**	**Elektromagnetische Verträglichkeit (EMV) - Teil 6-2: Fachgrundnormen - Störfestigkeit für Industriebereiche** / Electromagnetic compatibility (EMC) - part 6-2: Generic standards - Immunity for industrial environments / *Compatibilité électromagnétique (EMV) - partie 6-2: Normes génériques - Immunité pour les environnements industriels*
X	**EN 61000-6-4: 2011-09**	**Elektromagnetische Verträglichkeit (EMV) - Teil 6-4: Fachgrundnormen - Störaussendung für Industriebereiche** / Electromagnetic compatibility (EMC) - part 6-4: Generic standards - Emission standard for industrial environments environments / *Compatibilité électromagnétique - partie 6-4: Normes génériques - Emissions de parasites pour les activités industrielles*
X	**DIN EN 50110-1: 2014-02**	**Betrieb von elektrischen Anlagen /** Operation of electrical installations / *Fonctionnement des installations électriques*
X	**DIN EN 61010-1/A1:2015-04**	**Sicherheitsbestimmungen für elektrische Mess-, Steuer-, Regel- und Laborgeräte - Teil 1: Allgemeine Anforderungen** / Safety requirements for electrical equipment for measurement, control and laboratory use - part 1: General requirements / *Consignes de sécurité pour les appareils électriques de mesure, de commande, de régulation ou de laboratoire - partie 1: Prescriptions générales*

Datum / Data		**2017-02-15**
Qualitätsbeauftragter / Quality representative / *Délégué de qualité*	**Name** / Name / *Nom* **Gerd Reinhardt**	
Produktmanager / Product manager / *Directeur de produit*	**Name** / Name / *Nom* **Oliver Fickert**	