WELCH
by Gardner Denver

Operation Manual (EN)

Translation of the german original manual

Hold-Back-Pump

Model:

► HBP 101

112036

2016-12-20

Gardner Denver Thomas GmbH
Am Vogelherd 20
98693 Ilmenau
Germany
T +49 3677 604 0
F +49 3677 604 131
welch-ilmvac@gardnerdenver.com
www.welchvacuum.com

Customer Support +49 3677 604 0

We are constantly working on the further development of all our product types.

Reprinting or reproduction of this manual, including extracts, is not allowed without the prior written permission of Co. Gardner Denver Thomas GmbH.

All rights under the copyright laws are expressly reserved by Co. Gardner Denver Thomas GmbH.

We reserve the right to make changes and amendments.

Contents

1 Important Information ... 4
1.1 General information ... 4
1.2 Target groups ... 4
1.3 Intended Use ... 4
1.4 Use for an Unauthorized Purpose ... 4
1.5 Safety Devices ... 5
1.6 Meaning of the Warning notes ... 5
1.7 Product Standards, Safety Regulations ... 5
2 Basic Safety Instructions ... 6
2.1 General information ... 6
2.2 Electricity ... 6
2.3 High Temperatures ... 6
2.4 Hazardous Substances ... 7
2.4.1 Explosive, aggressive and poisonous gases ... 7
2.5 Mechanical System ... 7
3 Description ... 8
3.1 Design ... 8
3.2 Principle of Operation ... 9
3.3 Areas of Application ... 9
3.4 Advantages of Use ... 10
3.5 Accessories ... 10
3.5.1 Optional Components for Various Rotary Vaporizers ... 11
3.5.1.1 Possibilities of connecting the HBP 101 to the Rota - without a fitted cooler - ... 11
3.5.1.2 Possibilities of connecting the HBP 101 to the Rota - with a fitted cooler - ... 12
3.6 Scope of Delivery ... 12
4 Technical Data ... 13
4.1 Dimensions ... 13
4.2 Intake Pressure / Pumping Speed – Diagram ... 13
4.3 Device Data ... 14
5 Installation and Operation ... 15
5.1 Unpacking ... 15
5.2 Installation, Connection - Vacuum schematic ... 15
5.2.1 Installation ... 16
5.2.2 Assembly of the screw connection for the suction connection ... 18
5.2.3 Electrical connection ... 18
5.3 Storage ... 18
5.4 Scrap Disposal ... 18
5.5 Operation ... 19
5.6 Intervention Options during the Process ... 20
5.7 Sensor ... 20
5.7.1 Assembly ... 20
5.8 PC - Operating software “WELCH-Control 424” ... 21
5.8.1 Set automatic start and stop times (alarm times) ... 22
5.8.2 Calibrating the sensor from the PC ... 22
6 Maintenance and Servicing ... 23
6.1 General Requirements ... 23
6.2 Maintenance Performed by the User ... 23
6.2.1 Maintenance of the diaphragm pump ... 23
6.2.1.1 Disassembly of the Diaphragm Pump ... 24
6.2.1.2 Assembly of the Diaphragm Pump ... 24
6.2.1.3 Test ... 25
6.2.2 Regular maintenance of other components ... 25
6.3 Maintenance by the Manufacturer ... 25
6.4 Damage Report ... 25
7 Troubleshooting ... 26
8 Spare Parts Overview ... 27
8.1 Service kit ... 27
8.2 Spare parts view - Complete unit HBP 101 ... 28
8.2.1 Spare parts list - Complete unit HBP 101 ... 29
8.3 Spare parts view - Diaphragm pump MPC 301 Z ... 30
8.3.1 Spare parts list - Diaphragm pumps MPC 301 Z ... 31

EC Declaration of Conformity

1 Important Information

1.1 General information

The Hold-Back-Pump conforms to the:

2006 / 42 / EC	Machinery Directive
2014 / 30 / EU	Electromagnetic Compatibility Directive

The CE sign is located on the rating plate. Observe the binding national and local regulations when fitting the system into installations.
Our products are sold worldwide and can therefore be equipped with the typical national plugs and for the various voltages. You will find more information about the available pump designs on our web page in the internet.

1.2 Target groups

This Operating Manual is intended for the personnel planning, operating and maintaining the Hold-Back-Pump.
This group of people includes:

- Designers and fitters of vacuum apparatus,
- Employees working on commercial laboratory and industrial vacuum technology applications and
- Service personnel for Hold-Back-Pump.

The operating and maintaining personnel of the Hold-Back-Pump must have the technical competence required to perform the work that has to be done.
The user must authorize the operating personnel to do the work that has to be done.
The personnel must have read and understood the complete Operating Manual before using the Hold-Back-Pump.
The Operating Manual must be kept at the place of use and be available to the personnel when required.

1.3 Intended Use

- The layout of the Hold-Back-Pump must be appropriate for the conditions of use. The user bears the sole responsibility for this.
- The Hold-Back-Pump may only be operated under the conditions stated
  - in the "Technical Data" chapter,
  - on the rating plate, and
  - in the technical specification for the order concerned.
- The Hold-Back-Pump with an integrated chemical-resistant diaphragm pump are designed for an optimised distillation process. Safe, optimal distillation results can be achieved by complying with the currently valid regulations. These mainly lie in a reduction of the environmental impact.

1.4 Use for an Unauthorized Purpose

It is forbidden to use the pump for applications deviating from the technical data stated on the type plate or the conditions stated in the supply contract, or to operate it with missing or defective protective devices.

1.5 Safety Devices

Measures such as the following are for the safety of the operating personnel:

- operating mode S1 (with grounding connector)
- Built-in thermocouple (motor)
- Ground connection
- Rupture protected glass components
- Warning notes

The Hold-Back-Pump must not be operated without these elements.

1.6 Meaning of the Warning notes

Take note of the warning notes. They are in the following box:

⚠	**CAUTION ! / WARNING !**
Hazard which may lead to serious injuries or material damage.	

1.7 Product Standards, Safety Regulations

The Hold-Back-Pump fulfils the following product standards:

DIN EN ISO 12100:2011-03	Safety of machinery - General principles for design - Risk assessment and risk reduction
DIN EN ISO 13857:2008-06	Safety of machinery - Safety distances to prevent hazard zones being reached by upper and lower limbs
DIN EN 1012-2:2011-12	Compressors and vacuum pumps - Safety requirements - Part 2: Vacuum pumps
DIN EN ISO 2151:2009-01	Acoustics - Noise test code for compressors and vacuum pumps - Engineering method (grade 2)
DIN EN 60204-1:2014-10	Safety of machinery - Electrical equipment of machines - Part 1: General requirements
DIN EN 61000-6-2:2011-06 **DIN EN 61000-6-4:2011-09**	Electromagnetic compatibility (EMC) - Part 6-2: Generic standards - Immunity for industrial environments Part 6-4: Generic standards - Emission standard for industrial environments
DIN EN 61010-1/A1:2015-04	Safety requirements for electrical equipment for measurement, control and laboratory use - Part 1: General requirements
DIN EN 50110-1:2014-02	Operation of electrical installations
Directive 2012/19/EU	Electrical and electronics - old devices (WEEE)
Directive 2011/65/EU	Dangerous materials in electrical and electronics devices (RoHS II)
China - RoHS II	Environment protection law - China 2016-01

The following additional safety regulations apply in the FR Germany:

BGV A3	Electrical equipment and operating materials
VBG 5	Power-driven machines
BGR 120	Guidelines for laboratories
BGI 798	Hazard assessment in the laboratory
BGG 919 (VBG 16)	Accident prevention regulations for "compressors"
BGR 189 (BGR 195;192;197)	Use of protective working clothes

Observe the standards and regulations applying in your country when you use the Hold-Back-Pump.

2 Basic Safety Instructions

2.1 General information

⚠	**CAUTION !**
Warning notices must be observed. Disregarding them may lead to damage to health and property.	

The Hold-Back-Pump must be operated by personnel who can detect impending dangers and take action to prevent them from materialising.

The user/operator is responsible for correct installation and safe operation.

After work has finished, the hold-back pump must continue to run for about ten minutes with the suction pipe open in order to clean the valves.

The manufacturer or authorized authorised workshops will only service or maintain the hold-back-pump if it is accompanied by a fully completed damage report. Precise information about the contamination (also negative information if necessary) and thorough cleaning of the pump are legally binding parts of the contract.

Contaminated Hold-Back-Pump and their individual parts must be disposed of in accordance with the legal regulations.

The local regulations apply in foreign countries.

2.2 Electricity

The Hold-Back-Pump is delivered in operating mode S1. Please note that the testing must be repeated in accordance with DIN EN 0105, DIN EN 0702 and BGV A 2 in case of portable devices of operating mode S1.

The local regulations apply in foreign countries.

Please note the following when connecting to the electrical power supply system:

- The electrical power supply system must have a protective connector according to DIN VDE 0100-410 (IEC 60364-4-41).
- The protective connector must not have any breaks.
- The connecting cable must not be damaged.
- All interfaces are under low voltage according to DIN VDE 0100-410.

2.3 High Temperatures

The diaphragm pump may heat up as a result of the temperature of the gas being pumped and through intrinsic heating.

Use suitable devices to prevent the maximum permissible temperatures from being exceeded.

- $<$ 40 °C for the environment, and
- $<$ 60 °C for the gas to be pumped.

The motor for single phase alternating current is protected against overload by an integrated motor protection switch.

2.4 Hazardous Substances

⚠	**CAUTION !**
The operating company bears the responsibility for the use of the Hold-Back-Pump. Hazardous substances in the gases to be pumped can cause personal injuries and property damage. Pay attention to the warning notices for handling hazardous substances.	

The local regulations apply in foreign countries.

2.4.1 Explosive, aggressive and poisonous gases

If aggressive or poisonous gases are used or occur, the user must recognize this state of affairs and compensate for them by taking appropriate measures complying with the relevant, currently valid regulations.

2.5 Mechanical System

Improper use can lead to injuries or material damage. Observe the following instructions:

- Only operate the hold-back-pump with hoses of the specified dimensions.
- Solid particles in the pumping medium impair the pumping action and can lead to damage. Prevent their penetrating into the pump.
- Hazardous substances must be separated out as far as this is technically possible before they reach the pump.
- External mechanical stresses and vibrations must not be transmitted to the system. Only use a flexible laboratory hose for connecting the hold-back-pump.
- The overpressure generated at the pressure port must not exceed 1 bar for a short time.
- Set the safety suction system on a flat and horizontal surface.
- Prevent dyes exuding.
- For cooling purposes, maintain an air gap of about 5 cm between the pump and surrounding surfaces.
- The diaphragm pump must be given maintenance if it makes unusual noises.
- The exhaust must be connected to a suitable air evacuation duct.
- The bath temperature set at the vaporizing flask must not exceed the boiling point of the solvent used at room temperature.

When handling glass vessels, pay attention to:

- Only use glass vessels with a plastic coating for splinter protection.
- Only use vessels which are suitable for use with vacuums (e.g. round-bottomed flasks). We recommend that only glass components supplied by the manufacturer are used. Do not use Erlenmeyer flasks.
- Before each evacuation, check glass vessels for damage which might impair their strength, replace them if any such damage is found.
- Do not heat glass vessels on one side only.
- Retardation of the boiling of the gases to be pumped can lead to a sudden pressure increase. Prevent retardation of boiling by means of suitable measures (e.g. turbulent agitation).
- For your own safety, operate the HBP 101 only in a fume chamber.

3 Description

3.1 Design

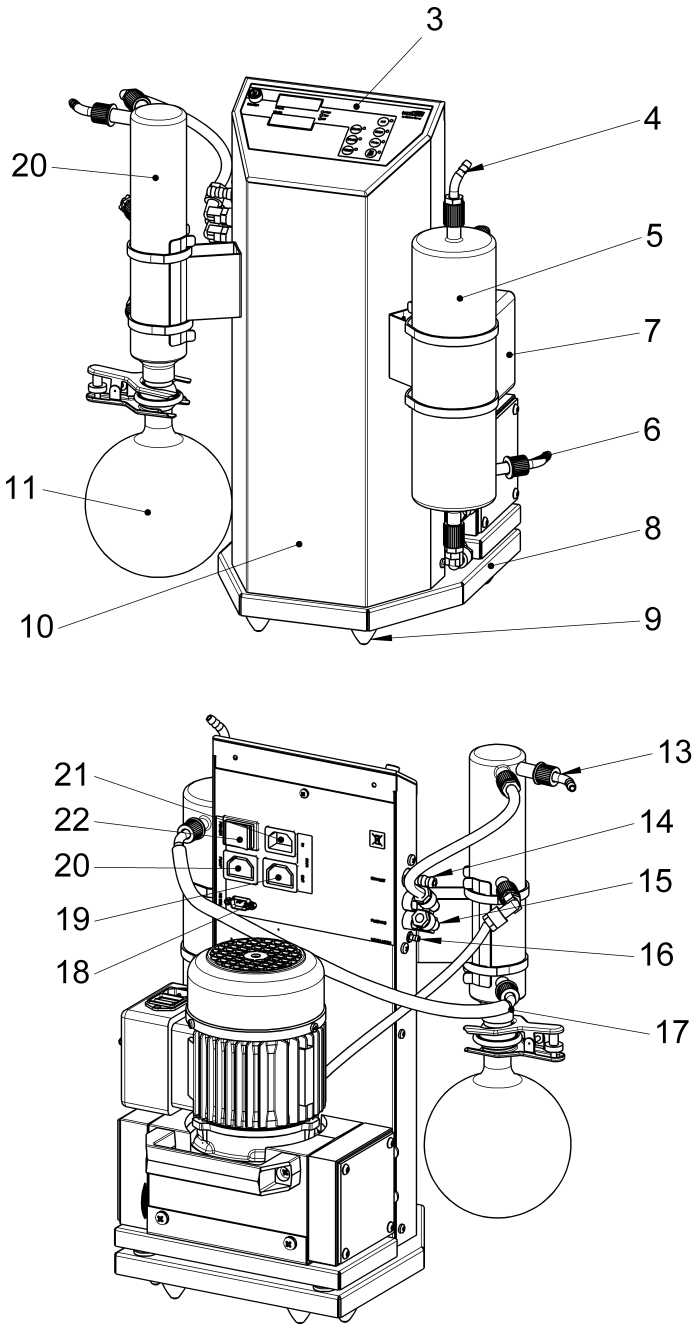

1	Socket for sensor
2	Pressure display with used sensor
3	Control unit / Operator controls (Keyboard)
4	Suction connection (Connection to Rotary evaporator)
5	Cooler 1
6	Cooling water - back flow
7	Diaphragm pump MPC
8	Basic plate
9	Swivelling feet
10	Central column
11	Collecting flask 1000 ml
12	Cooler 2
13	Cooling water - feed flow
14	Outgoing air (Exhaust)
15	Flushing gas (Flushing – Connection to Rotary evaporator)
16	Ventilation
17	Cooling water bridge between coolers 1 and 2
18	SUB-D socket (RS 232)
19	Inlet connector for non-heating apparatus for an additional external device (main OUT)
20	Inlet connector for non-heating apparatus for MPC (pump)
21	Network inlet connector for non-heating apparatus (main IN)
22	ON/OFF – Switch (power)

Fig. 1 Design HBP 101, Front- and rear unit

The Hold-Back Pump HBP 101 is a vacuum pump with upstream condensation of the solvent. It is designed as a closed system.

A chemical-resistant, modified diaphragm pump **(7)** is used as the vacuum pump. It is complete and is attached as a separate module to the base plate **(8)**, and electrically connected via a connector for non-heating apparatus **(21)** on the back wall of the central column **(10)** and the control unit **(3)**.

The operator controls **(3)** are located on the top surface of the column. The entire control system is fitted in the column.

The distilled-off solvents are collected in the laterally attached 1000 ml round-bottomed flask **(11)**.

The customer has to connect the suction connector **(4)** and the flushing gas **(15)** of the hold-back pump to his vaporization appliance. We recommend the use of a rotary evaporator without a cooler.

The electrical connection to the network is made by plugging a device connecting cable into the socket for non-heating apparatus **(21)** fitted in the rear wall of the central column. The device switch **(22)** is located next to the above-mentioned connector.

3.2 Principle of Operation

The boiling temperature of the solvent is attained by increasing the temperature of the solvent or solvent mixture via a vaporization unit, and by the reduced pressure generated by the diaphragm pump **(7)**. The vaporized solvent is condensed in the cooler 1 **(5)**. The condensate thus created inevitably leads to a minimization of the volume being pumped by the diaphragm pump.

A defined quantity of gas is removed via flushing gas valve **(15)** from the pressure-side of the closed work circuit of the pump and fed to the suction-side of the diaphragm pump **(7)** in one set work cycle. This quantity of gas causes a brief increase in pressure. The condensate produced is extracted, and the diaphragm pump is activated. The condensate produced is extracted and collected in a condensate vessel **(11)**. The boiling retardation is corrected at the same time. The procedure described is continued alternately until the pump reaches the ultimate pressure.

3.3 Areas of Application

Hold-Back-Pumps have been specially developed for vacuum distillation in the chemical laboratory.

The Hold-Back-Pump can autonomously separate solvents mixtures from the non-distillable product without a fraction change. This happens continually in the optimal ratio to the information content of the solvent used. The objective is to minimize environmental contamination.

The hold-back pump is made of chemically resistant materials (PTFE, PEEK, PVDF, FFKM) appropriate for the range of applications. These materials guarantee a high level of reliability and a long service life.

3.4 Advantages of Use

The main advantages of the device are its compact size, its completely oil-free operation, , and automatically, optimal distillation control with the objective of maintaining the lowest emission rates.

Neither a complicated control and regulation unit nor a fraction change is required during the process of distilling mixtures. This ensures that the product is separated within one vaporization cycle. The vaporization of the solvent thus always takes place at the optimal boiling point. You do not need to precisely calculate the boiling temperature of the solvent or solvent mixture or exactly determine the vacuum of the system for the process.
The product is generated quickly and without losses in a closed circuit without environmental impacts. The process proceeds automatically.

3.5 Accessories

Illustration	Description
	Adapter – Ball B S 35 Made of borosilicate glass. Connector Gl 18 with screw connection and sealing ring DN 8. **Order no. 700348**
	Adapter – Ball B S 35 Made of borosilicate glass, with hose nozzle DN 10. **Order no. 828857-16**
	Sensor For measurement of process vacuum level. Vacuum connection: screw connection Gl 14 Output signal: 0.5 – 4.5 V **Order no. 112543-10**
 Please state length ordered.	***Vacuum hose PTFE 8/ 6x1mm*** Hose for outgoing air line **Order no. 828331**
	Vacuum hose PTFE 10/ 8x1mm Hose for suction line **Order no. 828332**
	Mains connection cable IEC with plug type 12 (CH) for HBP 101 in 230 V **Order no. 825877**

3.5.1 Optional Components for Various Rotary Vaporizers

3.5.1.1 Possibilities of connecting the HBP 101 to the Rota - without a fitted cooler -

Illustration	Description
	Adapter for Rotary Vaporizer – 50 / 158 Adapter for rota with long vaporizing tube. Made of borosilicate glass. Flange, external diameter = 50 mm Flange, internal diameter = 35 mm Flange height = 10 mm Two connections Gl 14 with blind cap and Gl 18 with screw connection and sealing ring DN 10. Fixing via glass screw connection and arrangement for filling the evaporating flask via hose nozzle DN 8 and swivel tap plug. **Order no. 700181-01**
	Adapter for Rotary Vaporizer – 50 / 70 Adapter for rota with short vaporizing tube. Made of borosilicate glass. Flange, external diameter = 50 mm Flange, internal diameter = 35 mm Flange height = 10 mm Two connections Gl 14 with blind cap and Gl 18 with screw connection and sealing ring DN 10. Fixing via glass screw connection and arrangement for filling the evaporating flask via hose nozzle DN 8 and swivel tap plug. **Order no. 700181**
	Adapter for Rotary Vaporizer – 50 / 120 Adapter for rota with being certain vaporizing tube. Made of borosilicate glass. Flange, external diameter = 50 mm Flange, internal diameter = 35 mm Flange height = 10 mm Two connections Gl 14 with blind cap and Gl 18 with screw connection and sealing ring DN 10. Fixing via glass screw connection and arrangement for filling the evaporating flask via hose nozzle DN 8 and swivel tap plug. **Order no. 700349**
	Adapter for Rotary Vaporizer – Gl 45 - Gl 18 Made of borosilicate glass, complete with screw cap Gl 45 and seal. Connector Gl 18 with screw connection and sealing ring DN 8. **Order no. 700345**

3.5.1.2 Possibilities of connecting the HBP 101 to the Rota - with a fitted cooler -

Illustration	Description
	Adapter – Socket A S 35 Made of borosilicate glass, with hose nozzle DN 10. **Order no. 828857-15**
	Adapter – Socket A S 35 Made of borosilicate glass. Connector Gl 18 with screw connection and sealing ring DN 8. **Order no. 700346**
	Adapter – Socket A S 35 with glass stopcock Made of borosilicate glass, with hose nozzle DN 10. **Order no. 828857-18**
	Adapter – Socket A S 35 with glass stopcock Made of borosilicate glass. Connector Gl 18 with screw connection and sealing ring DN 8. **Order no. 700347**

3.6 Scope of Delivery

The scope of delivery is specified in the supply contract.

4 Technical Data

4.1 Dimensions

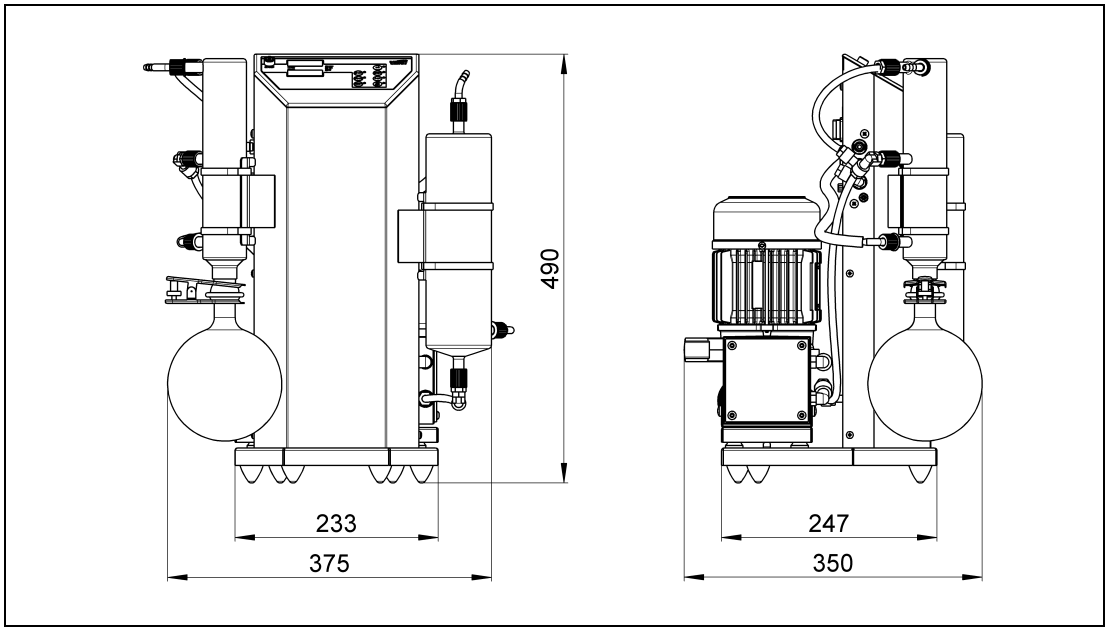

Fig. 2 Dimensions

4.2 Intake Pressure / Pumping Speed – Diagram

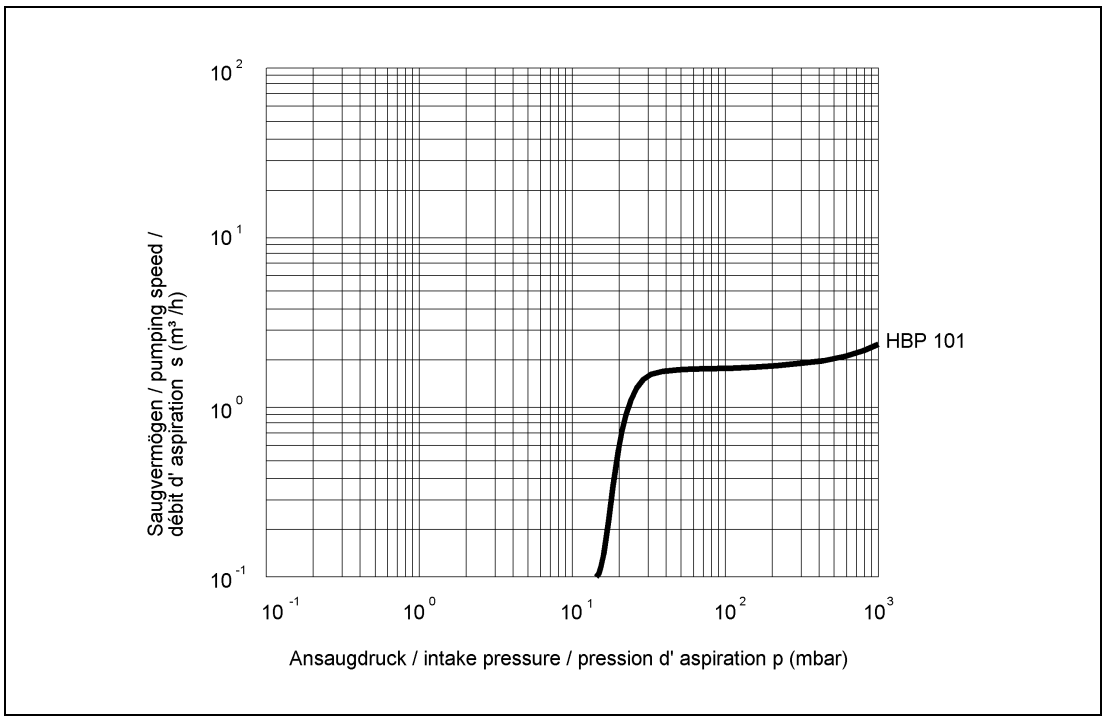

Fig. 3 Intake Pressure / Pumping Speed – Diagram

4.3 Device Data

Parameter	Unit	Data
Pumping speed 50/60 Hz DIN 28432	m^3 / h	2.3 / 2.5
	l / min	38 / 41
Ultimate pressure	mbar	10 - 15 (self-regulating)
Overpressure	bar	1
Sound pressure level	dB (A)	45
Suction connection	-	GL 14 with squeezing ring 10 for hose – outside diameter 10 mm *or* Hose nozzle DN 8 for hose – inside diameter 8 mm
Exhaust connection		Hose nozzle DN 8 for hose – inside diameter 8 mm
Cooling water connection		
Round bottom flask, pressure side	ml	1000
Solvent recovery	%	100
Cold water flow	°C	< 5
Voltage	V	230 / 115
Frequency	Hz	50/60
Power consumption	W	180
Operating mode	-	S 1
Type of protection DIN EN 60529		IP 42
Fuse	A	Thermal contact / electrical fuse
Dimensions (W/D/H)	mm	375 / 350 / 490
Weight	kg	18.8
Order numbers for:	-	
- **Hold-Back Pump - 230 V** *inclusive mains connection cable IEC with plug CEE, UK*		112036
- **Hold-Back Pump - 115 V** *inclusive mains connection cable IEC with plug US*		112036-01

The information presented in this material is based on technical data and test results of nominal units. It is believed to be accurate and reliable and is offered as and aid to help in the selection of products. It is the responsibility of the user to determine the suitability of the product for the intended use and the user assumes all risk and liability whatsoever in connection therewith. Gardner Denver Thomas GmbH does not warrant, guarantee or assume any obligation or liability in connection with this information.

5 Installation and Operation

5.1 Unpacking

Carefully unpack the Hold-Back-Pump. Check for:

- Transport damage,
- Conformity with the specifications of the supply contract (type, electrical supply data),
- Completeness of the delivery.

Please inform us without delay if there are discrepancies between the delivery and the contractually agreed scope of delivery, or if damage is detected.
Please take note of the general terms of business of the manufacturing firm.
In case of a claim under warranty, the device must be returned in packaging that is suitable for protecting it during transport.

5.2 Installation, Connection - Vacuum schematic

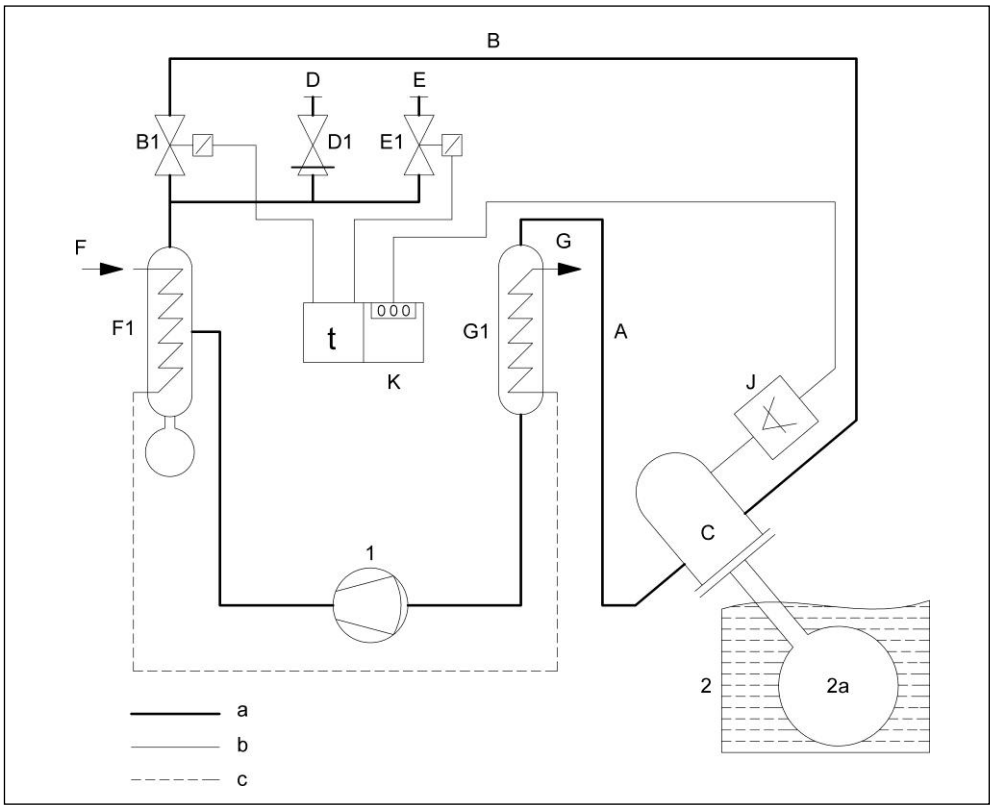

1	Hold-Back-Pump	**F**	Cooling water – feed flow
2	Rotary evaporator with evaporator piston *(user side)*	**F1**	- Cooler 2
2a		**G**	Cooling water - back flow
A	Suction line	**G1**	- Cooler 1
B	Flushing gas line ***(Flushing)***	**H**	Power supply
B1	- Flushing gas valve	**J**	Vacuum sensor with pressure indicator and connection
C	Adapter 50/70 with 3 connections	**J1**	Plug connector
D	Hose nozzle DN 8 ***(Exhaust)***	**K**	Control unit (internal) with display
D1	- Relief valve	**a**	***Vacuum line***
E	Hose nozzle DN 4 ***(Ventilation)***	**b**	***Electrical line***
E1	- Ventilation valve	**c**	***Cooling water***

Fig. 4 Vacuum schematic

5.2.1 Installation

	Figures	Process
1.	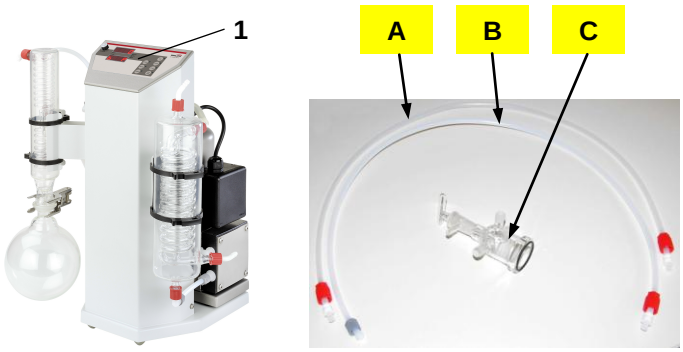	Carefully remove the Hold-Back-Pump **(1)**, the hoses with the screw connections **(A + B)** and the adapter **(C)** from the shipping case.
2.	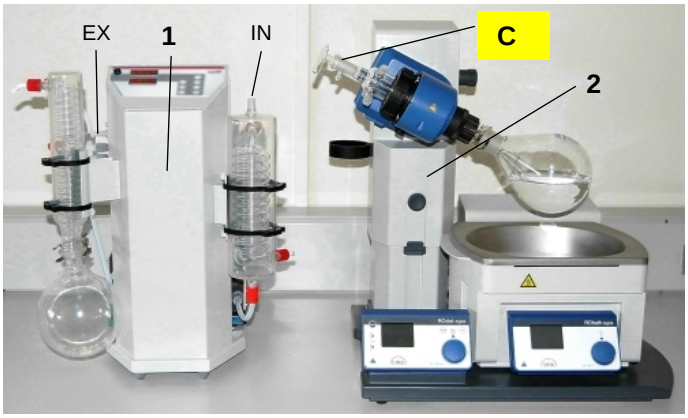	Set the Hold-Back-Pump **(1)** with rotary evaporator **(2)** on a flat and horizontal surface. Remove the protective caps on the connections and check that the all other connections are properly seated. Attach the adapter **(C)** on the rotary evaporator **(2)** union nut and tension spring.
3.	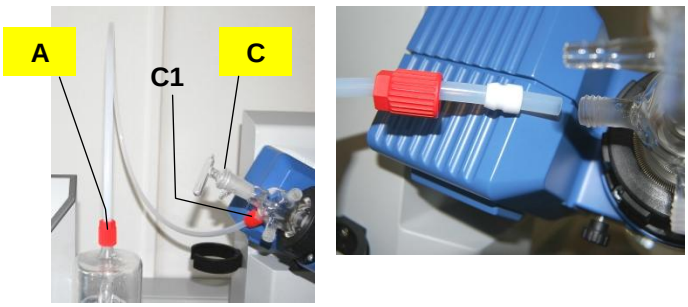	Connect the intake connection **(A)** to the vaporization appliance via adapter **(C)** with a hose. The suction hose should be at the under side **(C1)** of the adapter **(C)**.

	Figures	Process
4.	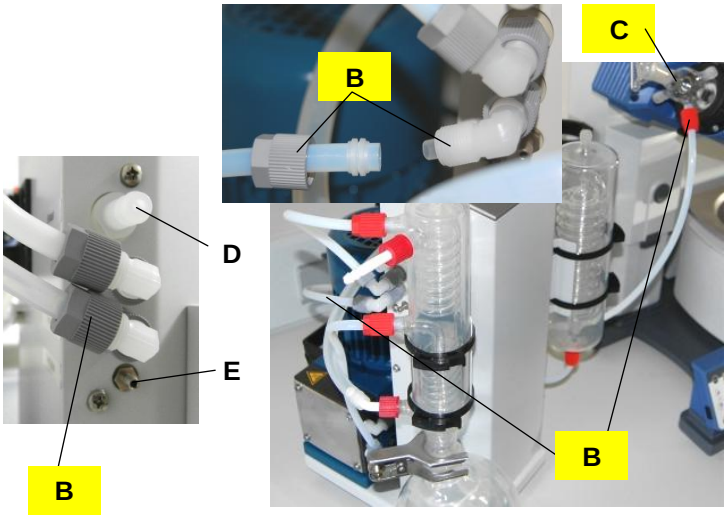	Connect the flushing gas line ***"Flushing"*** **(B)** to the vaporization appliance via - *middle connection* - adapter **(C)**. Connect the ***"Exhaust"*** pump exhaust air duct to the central exhaust air duct of the laboratory by the hose nozzle DN 8 **(D)**. For a possible necessary ***"Ventilation"*** with inert gas, this is to realize via the hose nozzle DN 4 **(E)**.#
5.		Connect the cooling water feed flow **(F)** and back flow **(G)** lines via hose nozzle DN 8. - The cooling water back flow **(G)** must be unpressurized. - The flow temperature of the cooling water should be at approx. 5 °C. - The user must provide the essential hose locking devices. - The user is to determine the required flow rate of cooling water and set.
6.		Connect the Hold-Back-Pump to the power supply **(H)** now.
7.	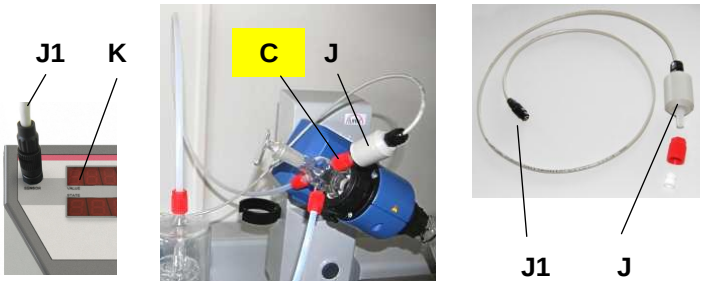	Connect the vacuum sensor **(J)** via - *upper connection* - adapter **(C)**. The electrical connection of the vacuum sensor is via the plug connector **(J1)** on the display **(K)**. If the sensor is not used, the appropriate port on your adapter is so blind to close.

5.2.2 Assembly of the screw connection for the suction connection

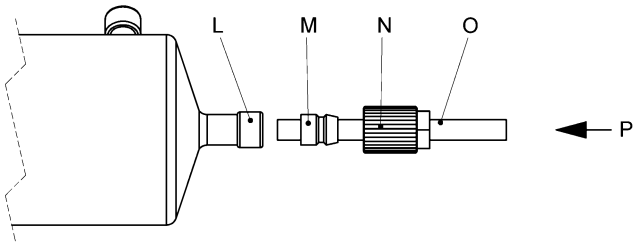

L	Thread GL
M	Clamping ring
N	Union nut
O	PTFE Vacuum hose
P	of the Rotary evaporator

Fig. 5 Instruction for assembly of the screw connection for the suction connection (IN)

CAUTION !

We recommend selecting and using components described *in chapter 3.5.1* **for connecting the HBP 101 to the user's vaporization appliance.**
It is not necessary to use the standard cooler on the rotary vaporizer.

5.2.3 Electrical connection

The Hold-Back-Pump is supplied with complete electrical wiring.
The electrical connection is made by plugging an appliance connection cable into the socket on the rear side of the appliance. The pump is connected via the marked device socket on the rear panel. The device's main switch is also located on the back panel (*see fig. 1*).

5.3 Storage

The pumps are to be stored in a low-dust, interior room within the temperature range from + 5 to + 40 °C and at a relative air humidity < 90%.
Leave the protective elements on the suction and pressure ports. Another equally good protection may be used.

5.4 Scrap Disposal

CAUTION !

The Hold-Back-Pumps must be disposed of in accordance with the 2012/19/EU guideline and the specific national regulations.
Contaminated pump systems must be decontaminated according to the laws.

5.5 Operation

⚠	**CAUTION !**
Observe the basic safety instructions when using the Hold-Back-Pump!	

The process may be initiated after the vacuum and electrical systems of the hold-back-pumps have been installed (*see fig. 4*), and after completing the preparatory chemical work for the vacuum distillation. It must be ensured that the vaporizing flask is only to max 50% full at the start, and that the total amount it contains does not exceed the volume of the collecting flask.

To do this, first switch on the main power supply switch on the back of the device and turn on the cold water flow. The flow temperature of the cooling water should be < 5 °C in order to achieve optimum results.

The operating keyboard is located on the top of the column.

The function of the rotary evaporator is explained in the manufacturer's operating manual.

⚠	**CAUTION !**
The coolant temperature must be lower than the condensation point of the current solvent in the available vacuum. **It is not necessary to preselect a precise bath temperature of customer's vaporization appliance as the system finds the boiling point of the solvent itself. However, it should not be higher than the boiling point of the solvent at standard pressure.**	

The process is started by pressing the **START** button on the display and it runs until the technically determined minimum under pressure has been attained.

Description of the automatic expiration:

- The pressure is automatically lowered until, in each case, the first boiling point is reached and controlled according to the solvents used. This means that all the solvents in the evaporating flask are extracted one after the other, and the product, which is not to be distilled, remains behind in the flask.
- An automatic control set for this procedure prevents frothing over in the evaporating flask. The substance or substances to be distilled off are collected on the pressure-side in the round-bottomed flask attached to the column.
- A fraction change is no longer needed even when using solvent mixtures.
- If the Hold-Back-Pump is fitted with a sensor, the adjacent pressure is displayed. If that is not the case, the display shows 0 = no pressure; AP = active control program.

The "vaporization-distillation" process has finished when no more solvent is extracted. The process is ended with the **STOP** key on the display and the complete system is automatically vented. An inert gas can be introduced into the system via the DN 4 "Ventilation" hose nipple in order to protect the product.

Stop	stops the process
Start	starts the process
on / off	switches the control and the indicator on of off

⚠	**WARNING !**
The unit must not be operated without suitable protective devices, please refer *to chapter 1.5.*	

5.6 Intervention Options during the Process

If with sensitive substances the in-built protection against frothing over is inadequate at the start of the process, or if the process is to be accelerated, it is possible to intervene manually by using the keys on the user interface.

Break	In there is frothing, the sensitivity of the system is reduced by one step and the system carries on working in this setting.
P min	Accelerating the distillation by actuating longer evacuating times.
AIR	Option of a brief manual venting or feeding inert gas during the distillation.
RESET	Resetting all settings. The distillation process starts from the beginning without automatic venting.

5.7 Sensor

If you would like a visual indication of the pressure during the operation of your Hold-Back-Pump, then the supplied sensor can be possible to mount *(see also figure 4, pos. J*).

5.7.1 Assembly

- Insert the vacuum connector of the sensor into a given GL14 port and secure with the screw cap *(see figure 5)*.
- Lay the cable to the display, insert the miniature plug into the socket and lock it in position. The pressure is indicated directly. If the pressure display does not appear, the sensor must be calibrated as described *in chapter 5.8.*

5.8 PC - Operating software “WELCH-Control 424”

The Hold-Back Pump can be operated and sensor can be calibrated easily from a PC with this software.

In order to do this, the operating software supplied on a CD has to be installed, and the ***HBP*** linked to the ***PC*** via the RS 232 – COM 1..4 (O-Modem).

The following user interface appears on the screen after the start

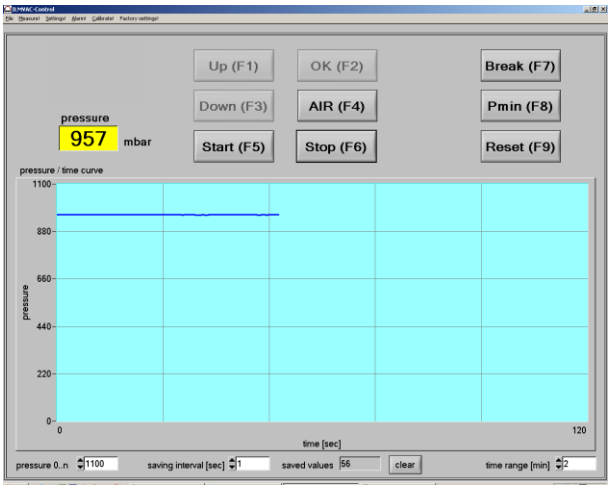

The illustration shows the pressure pattern in active condition.
The chronological and pressure display ranges can be set with the lower buttons on the user interface.
Data can also be recorded in the PC memory, which can then be stored as an ASCII file in the ***"File / Save memory"*** menu.
The curve can be printed out by the system printer via the ***"File / Print curve"*** menu.

Only activate mode A when using the HBP.
Unused buttons will be marked in grey.

The buttons correspond to the buttons on the unit. However, the buttons cannot be held down.

In active **MODE**, the **AIR** button can be used with the mouse like on the unit. Pressing the mouse button opens the valve, releasing it closes the valve again. However, this only works if the mouse pointer is still on the **AIR** button.

The **START** button starts in the operating mode shown in the **MODE** window. The restrictions in the menu do not apply here, so any operating mode can be started.

In active **MODE**, the **START** button only shows the set values on the controller display.

The **STOP** key terminates the active operating mode.

You can switch between "***Settings***", "***Measure***", "***Alarm***" and "***Calibrate***" via the menu.

The "**Settings**" are not activates in **mode A**. It is not required to adjust the settings in this special case.

5.8.1 Set automatic start and stop times (alarm times)

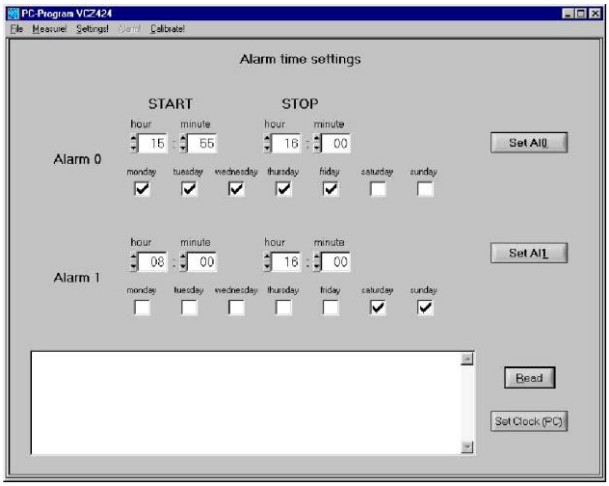

The alarms behave like the **START** and **STOP** buttons.
Two inter-dependent alarms can be set. These should not overlap chronologically. Each alarm triggers at the set time on the set day of the week.

If the end time is earlier than the start time, then it works until this time on the next day.

5.8.2 Calibrating the sensor from the PC

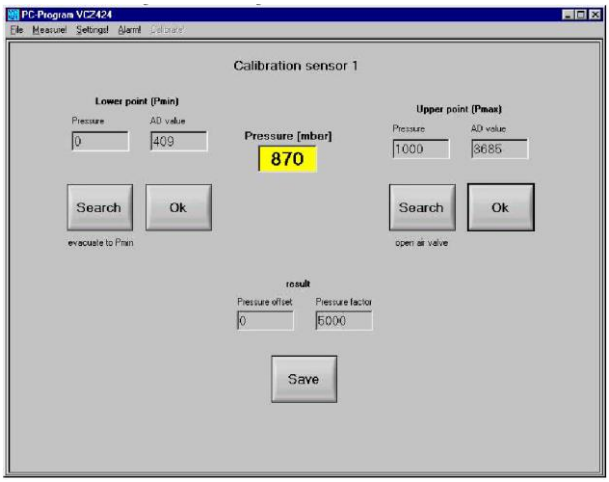

Calibration is only possible if the current password has been entered under the *"**File**"* menu.
(Date as hexadecimal number)

With **SEARCH**, evacuation is for the lower point. If the pressure does not fall any further, the value can be entered by using a comparison measurement device and accepted with **OK**.
The system is vented and the barometric pressure is entered as the upper point. Here again, a confirmation should not be made until the value has been reached. The calculated correction values are displayed.

⚠	**CAUTION !**
Ensure that the pressure to be set is also present at the sensor.	

6 Maintenance and Servicing

6.1 General Requirements

Repairs of the Hold-Back-Pumps may only be performed by the manufacturer or authorized workshops. The prerequisites are a complete and factually correct damage report, and a clean and, if necessary, a decontaminate device.

Send in defective devices for repair either to the manufacturer or to an authorized workshop.

The information about the contamination or thorough cleaning is legally binding parts of the contract.

⚠	**WARNING !**
When repairing contaminated units, be sure to observe the applicable user specifications regarding decontamination as required. **Provide full information about the type of contamination and the used materials and clean the pump thoroughly before handing it over to third parties.**	

6.2 Maintenance Performed by the User

6.2.1 Maintenance of the diaphragm pump

At the end of the working day, run the device in cleaning mode for about 10 minutes with the gas ballast valve open. When necessary, flush the pump with a suitable solvent-air-mixture via the intake connection.

Maintenance operations of the diaphragm pump must be performed at regular intervals, the length of which will depend upon the medium pumped. The maintenance intervals must be set specifically for the substances being used. We recommend a period of 1,000 hours. This maintenance must be performed as described *in chapter 6.*

Scope of permissible work

- Open the pump heads.
- Inspect the pump chambers, diaphragms and valves.
- Clean the interior of the pump, change the diaphragms and valves.

Tools required

Tool kit: Order no. 402105, *consists of:*

- Order no. 829801 Pin type face wrench, adjustable, size 3,
- Order no. 829801-6 Allan key, size 4
- Order no. 829801-8 Open spanner, size SW 10
- Order no. 829801-2 Open spanner, size SW 14

6.2.1.1 Disassembly of the Diaphragm Pump

1. Disconnect the power supply and secure against switching on again.
2. Disconnect the suction and pressure-side media lines and the electrical connection (plug).
3. Use an open spanner (size 10) to unscrew and remove the fixing nuts of the pump underneath the mounting plate.
4. Open the screw clamps **(9)** of the hoses **(10)** on the pump body with the SW 14 open spanner.
5. Remove four machine screws **(1)** from each pump head with an allan key, size 4.
6. Lift off the pressure plate **(2)**, the connection head **(3)** and the pump head **(6)**. The O-rings **(4)**, valves **(5)** and diaphragm **(8)** are now freely exposed.
7. Loosen if necessary the diaphragm **(8)** at the strain washer **(7)** by turning the size 3 pin type face wrench anticlockwise.
8. Clean the valves **(5)** and the diaphragm **(8)** with a soft cloth and acetone.
9. Check that the drive is in good working order.

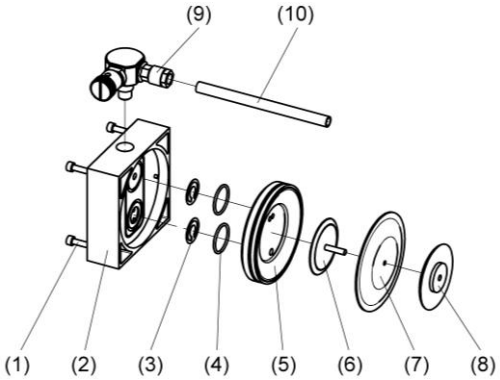

Fig. 6 Disassembly, assembly

⚠	**WARNING !**
Renew defective parts, if necessary! Wear protective gloves! **Parts must be renewed at the intervals stated in this Operating Manual or as specified by the user internally!** **Do not clean with compressed air!**	

6.2.1.2 Assembly of the Diaphragm Pump *(see Fig. 6)*

1. Place the pump so that the diaphragm is lying in a horizontal position.
2. Use the size 3 pin-type face wrench to tighten the pressure disc **(9)**, the diaphragm **(8)** and the strain washer **(7)** with the correct torque of 6 - 7 Nm.
3. Bring the diaphragm **(8)** into the central position.
4. Put on the pump head **(6)** and align it according to the types of valves.
5. Insert the valves **(5)** and the O-rings **(4)**.
   Ensure that they are lying completely flat. Do not insert the burred side facing the sealing surface.
6. Put on the connecting head **(3)** and align it with the locating pin.
7. Put the pressure plate **(2)** onto the connecting head and tighten the 4 machine screws with a torque of 4 - 5 Nm in diagonal order.
8. Reattach the hose **(10)** connections with clamping ring screw fittings **(9)**.
9. Put the pump on the mounting plate, secure it, and restore connections.

6.2.1.3 Test

- Connect a vacuum measuring device to the suction connector and measure the ultimate pressure. If the device is working properly, then the figure stated in the technical data must be attained within a maximum of one minute.
- The pump must not make any abnormal noises.
- Moving parts must not touch each other.

6.2.2 Regular maintenance of other components

- Check all glass components regularly for integrity clean and replace them as and when necessary.
- Empty the round-bottomed collection flask in good time (comply with the disposal regulations).
- Check screw connections for tightness and tightened when necessary.
- Check vacuum hoses for leaks and, if necessary, replace them.
- Check the running noises of the vacuum pump regularly.
- Check the electrical supply lines for any damage.

⚠	**CAUTION !**
Only perform the work that is described here, and that which is permitted to be done by the user. **All other maintenance and service work may only be performed by the manufacturer or a dealer authorized by him. Beware of the device parts being possibly contaminated by hazardous substances.** **Please observe the applicable disposal regulations! Wear protective clothing!**	

6.3 Maintenance by the Manufacturer

Repairs and maintenance going beyond the extent of the work described *in chapter 6.2* or reconditioning or modification may only be performed by the manufacturer or authorized workshops.

⚠	**WARNING !**
The user shall be liable for the consequences of an incorrect damage report or a contaminated pump. The statements in the damage report are legally binding.	

6.4 Damage Report

You find the form of the damage report to the Download on our web page in the menu "service" and "Downloads". www.welchvacuum.com
If you should not have an entrance to the Internet, you can request the form also gladly with us, under phone +49 3677 604 0.

⚠	**WARNING !**
Incomplete or incorrectly completed damage reports may endanger the service personnel! Provide full information about contamination, and clean the pump thoroughly before handing it over to third parties.	

7 Troubleshooting

Only manufacturing firm and authorized service workshops may work on the pump and their accessories during the warranty period.

Trouble	Cause	Remedy	
		by:	***with:***
Vacuum pump does not start	No power supply	***Qualified electrician***	Check electrical installation
	Motor defective	***Service workshop***	Exchange
	Pump body defective		Repair and/or exchange
Vacuum pump does not generate a vacuum or only an inadequate one	Connected apparatus and/or connecting elements leaking	***User or Service workshop***	Identify and seal the leak, replace the seals and/or hoses if necessary.
	Vacuum pump leaking		Check the hose connections between the pump heads, replace the hoses and/or fittings if necessary.
	Pump head leaking	***Service workshop***	Repair and/or exchange
	Diaphragm defective	***User or Service workshop***	Exchange of the diaphragm *(see chapter 6.2)*
	Valve defective		Exchange of the valve *(see chapter 6.2)*
	Vacuum pump dirty		General maintenance / cleaning
	Valves dirty		Cleaning condensates and foreign objects out of the valves.
Running noise	Vacuum pump dirty	***User or Service workshop***	General maintenance / cleaning
Glass components	defective and/or leaking	***User***	Exchange of the glass parts or seals
Cable(s)	defective and/or brittle	***Qualified electrician***	Exchange of the cable(s)

8 Spare Parts Overview

The spare parts list contains all the spare parts and all the information necessary for ordering.
When ordering, please quote the description, quantity, serial number and order number!

	CAUTION !
We are not liable for any damage caused by the installation of any parts not supplied by the manufacturer.	

8.1 Service kit

Designation	Order no.
Service kit	402035

The service kit consists of:

Designation	Piece	Order no.
O-Ring ø 25 x 2	4	829250-4
O-Ring ø 3 x 1.5	4	829190-1
Valve	4	400656-3
Diaphragm	2	400732-04

8.2 Spare parts view - Complete unit HBP 101

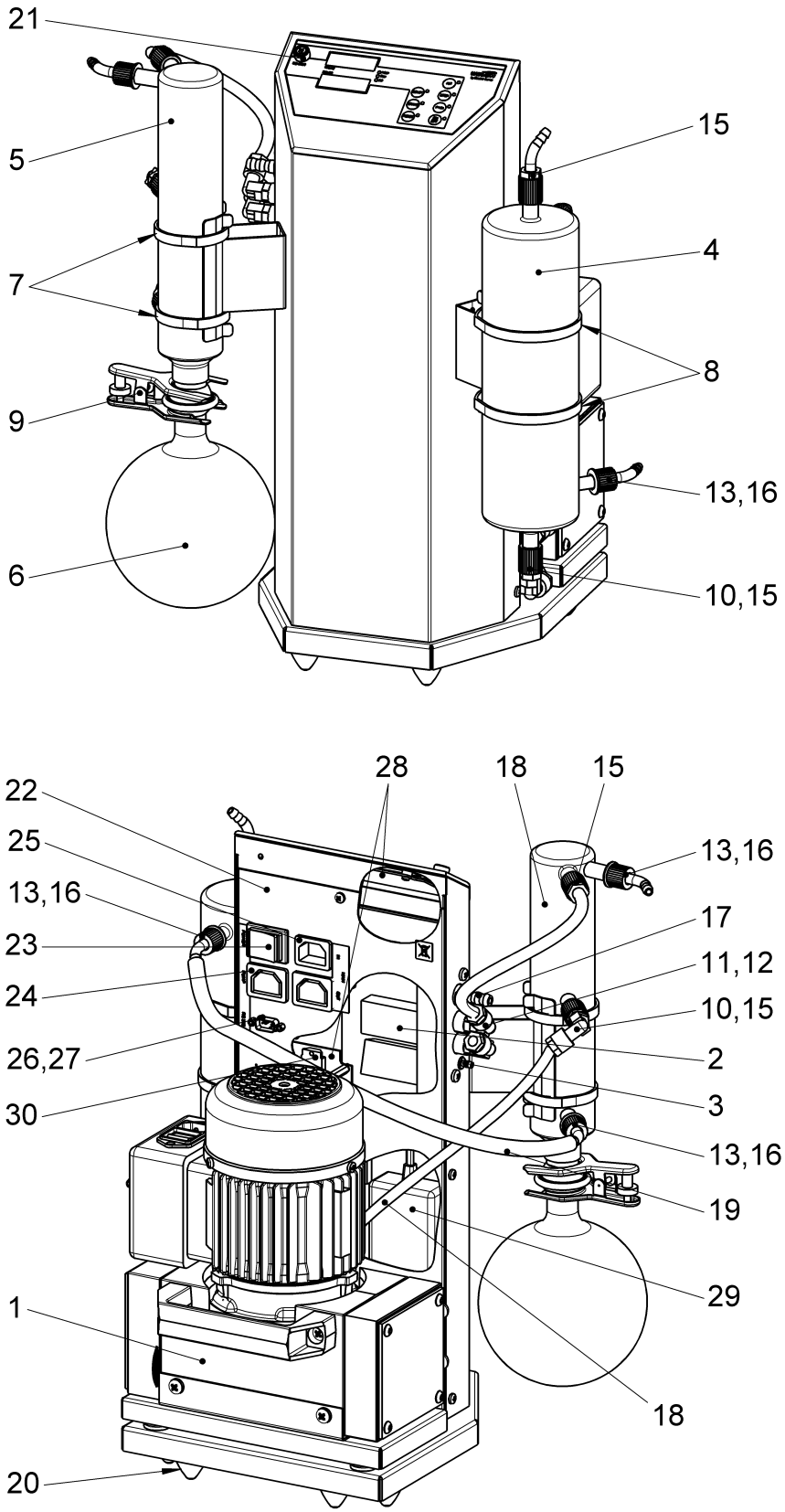

Fig. 7 Front- and rear unit HBP 101

8.2.1 Spare parts list - Complete unit HBP 101

Item no.	Designation	Piece	230 V	115 V
			Order no. 112036	Order no. 112036-01
			Order no.	**Order no.**
1	Diaphragm pump MPC 301 Z *(consisting of - see chapter 8.3)*	1	4000481-35	4000481-36
2	Valve block complete	1	112534	112534
3	Inserted bush	1	160537	160537
4	Cooler 1	1	828857-26	828857-26
5	Cooler 2	1	828857-25	828857-25
6	Round-bottomed flask 1000 ml – KS 35	1	828841-3	828841-3
7	Retaining strap 53 – 57 mm	2	824128	824128
8	Retaining strap 76 – 80 mm	2	824129	824129
9	Ball and socket clamp KS 35, stainless steel	1	828845	828845
10	Threaded elbow joint with setting stud PVDF 8 – A8	2	829913-2	829913-2
11	Threaded elbow joint PVDF 8	2	829917	829917
12	Setting nipple PVDF A8 – 1/8“	2	829915	829915
13	Screw cap GL 14 red	4	828872	828872
14	Clamp ring PVDF 8	1	829919-2	829919-2
15	Screw cap GL 14/8 red with clamp ring	4	828872-4	828872-4
16	Hose nozzle bent PP, GL 14 with seal	4	828872-2	828872-2
17	Hose nozzle PP, DN 8 – R ¼“	1	710798	710798
18	Vacuum hose PTFE 8 / 6x1 mm	1 m	828331	828331
19	Silicone hose (inside diameter 6 mm x wall thickness 3 mm)	0.5 m	828374	828374
20	Rubber metal-pad	6	829138	829138
21	Subminiature round plug - 4 pole	1	825277-1	825277-1
22	Rear panel complete *(consisting of item no.: 23 - 30)*	1	112532-10	112532-10
23	- Switch green	1	825184	825184
24	- Socket for non-heating apparatus	2	825274-7	825274-7
25	- Plug for non-heating apparatus	1	825274-2	825274-2
26	- 9 pole connector Sub D	1	825275-6	825275-6
27	- Dust cap for connector Sub-D 9-polig	1	825275-2	825275-2
28	- Controller VCZ 424 without casing	1	827398-02	827398-02
29	- Power pack for VCZ 424	1	827398-04	827398-04
30	- Load relay	1	825741	825741
-	Mains connection cable IEC with plug CEE (D)	1	825885	-
	Mains connection cable IEC with plug BS (UK)	1	825878	-
	Mains connection cable IEC with plug NEMA 5-15 (US)	1	-	825903
ENCLOSED	Adapter 50/70 with 3 connections	1	700181-02	700181-02
	Vacuum hose PTFE 8 / 6x1 mm	3x 1 m	828331	828331
	T screw connection PVDF, 8 – 8 – 8	1	829926	829926
	Clamp ring PVFD 8	2	829919-2	829919-2
	Silicone seal for GL 18 (16x8) with sleeve	1	828856-2	828856-2
	Screw cap GL 14/8 red with clamp ring	1	828872-4	828872-4
	Operating software „WELCH-Control 424“ on CD with cable	1	620617	620617

8.3 Spare parts view - Diaphragm pump MPC 301 Z

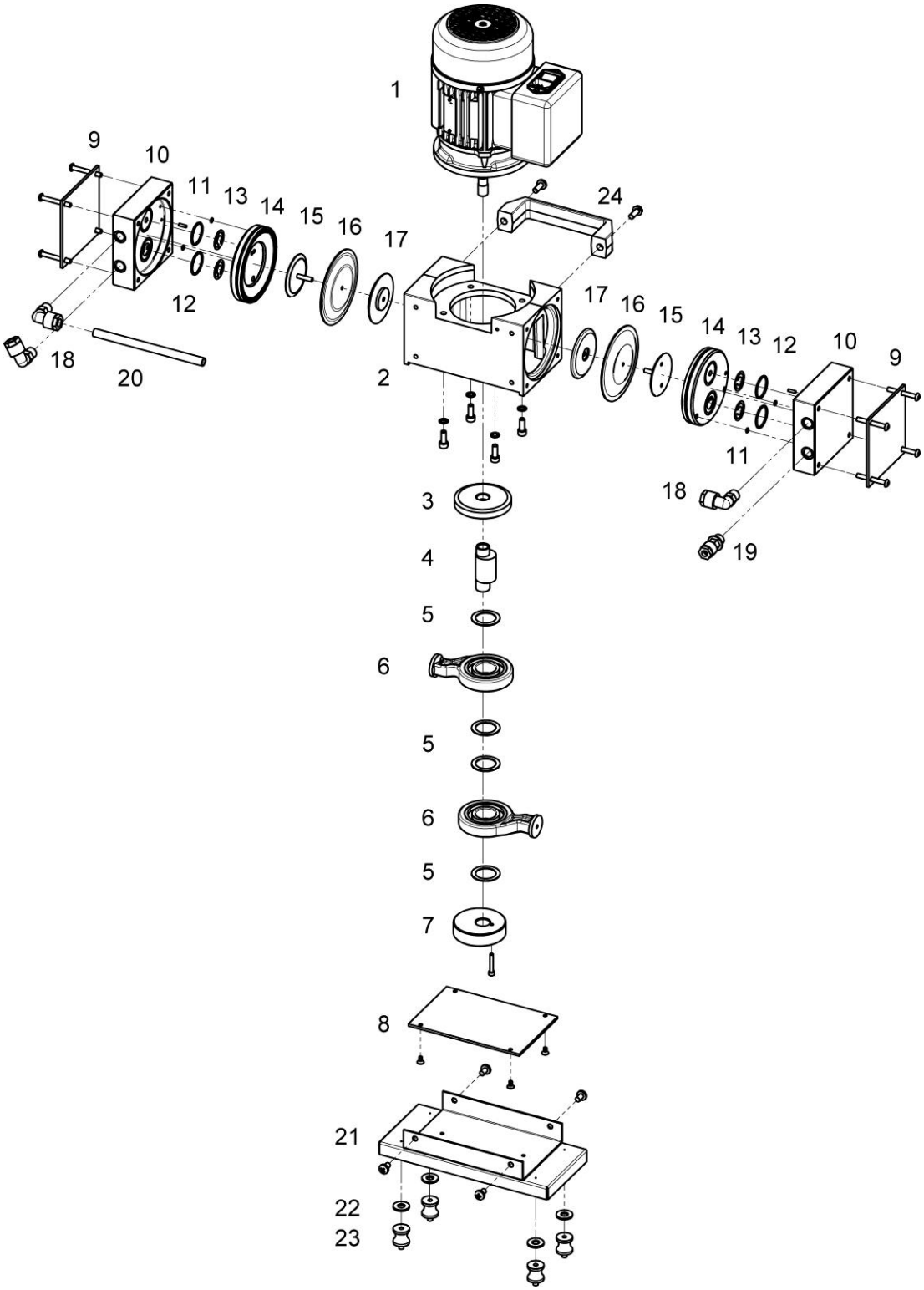

Fig. 8 Exploded view MPC 301 Z

8.3.1 Spare parts list - Diaphragm pumps MPC 301 Z

Item no.	Designation	Piece	230 V	115 V
			Order no. 4000481-35	Order no. 4000481-36
			Order no.	**Order no.**
- ***)**	Basic pump complete *(consisting of item no. 1 – 8)*	1	410402	410402-01
1	- Alternating-current motor with plug – non-heating plug combination	1	826420	826422-1
2	- Pump casing	1	400640	400640
3	- Flywheel mass	1	400649	400649
4	- Eccentric cam	1	400648	400648
5	- Close tolerance spacer 25 x 35 x 1	4	824957-1	824957-1
6	- Piston rod with ball bearing	2	400647-01	400647-01
7	- Mass balance	1	400678	400678
8	- Covering	1	400641-02	400641-02
9	Pressure plate	2	400706	400706
10	Connection head	2	400709-01	400709-01
11	O-Ring PTFE, ø 3 x 1.5	4	829190-1	829190-1
12	O-Ring FFKM, ø 25 x 2	4	829250-4	829250-4
13	Valve	4	400656-3	400656-3
14	Pump head	2	400705-01	400705-01
15	Tensioning washer	2	400707	400707
16	Diaphragm	2	400732-04	400732-04
17	Pressure washer	2	400680	400680
18	Threaded elbow joint PVDF 8 – ¼“	3	829929	829929
19	Straight threaded joint with seal edge PVDF 8 – ¼“	1	829919-1	829919-1
20	Vacuum hose PTFE 8 / 6x1 mm	0.5 m	828331	828331
21	Pump holder	1	115515	115515
22	Washer	4	112538	112538
23	Rubber metal-pad	4	829129	829129
24	Handle	1	828631	828631
25	Cable extension for non-heating IEC 3 x 0.1 mm (L = 0.6m)	1	825882-1	825882-1

***)** The "basic pump" module (items 1 – 8) can only be supplied complete under order number 410402 or 410402-01.

EG - Konformitätserklärung

EC Declaration of Conformity / *CE Déclaration de Conformité*

DIN EN ISO / IEC 17050

(de) **Hiermit erklären wir**	WELCH by Gardner Denver	**Gardner Denver Thomas GmbH** Am Vogelherd 20 98693 Ilmenau Germany	T +49 3677 604 0 F +49 3677 604 131 welch-ilmvac@gardnerdenver.com www.welchvacuum.com

unter eigener Verantwortung, dass nachstehendes Produkt aufgrund seiner Konzipierung und Bauart sowie in den von uns in Verkehr gebrachten Unterlagen den nachfolgend aufgeführten EG-Richtlinien und Normen entspricht.
Bei einer nicht mit uns abgestimmten Änderung des Produkts verliert diese Erklärung ihre Gültigkeit.

(en) We (Gardner Denver Thomas GmbH) herewith declare under our sole responsibility that the product described below is in accordance with the following Directives standards and other technical specifications regarding design and version when delivered from our factory.
This declaration becomes invalid whenever the product has been modified without our consent.

(fr) *Nous (Gardner Denver Thomas GmbH) certifions par la présente, que le produit décrit ci-après est conforme, tant dans sa conception que dans sa réalisation, aux normes de sécurité et d'hygiène exigées par les standards de la CE.*
En cas de modification du produit sans notre accord, cette déclaration devient caduque.

Bezeichnung des Produkts (Pumpen / Pumpstände) Description of product (pumps / pump systems) *Description du produit (pompes / pompe systèmes)*	**Hold-Back-Pumpe** / Hold-Back-Pump / *Pompe Hold-Back* HBP 101
Artikel-Nr. / Fabrication No. / *No. de fabrication*	112036, 112036-01
Baujahr / Year of manufacture / *Annee de fabrication*	**2016**

Das Produkt entspricht folgenden Richtlinien und Normen: / The product is in conformity with the following Directives and standards: / *Le produit est conforme aux directives et standards suivants:*

X	**2006/42/EG**	**Maschinenrichtlinie** / EC machinery directive / *directive CE sur les machines* (17.05.2006)
	2014/34/EU	**ATEX-Richtlinie für Verwendungen in explosionsgefährdeten Bereichen, Anhang III** / ATEX Guideline for use in potentially explosive atmospheres, Appendix III / *ATEX Directive for applications in hazardous areas, Annex III*
X	**2014/30/EU**	**Elektromagnetische Verträglichkeit** / EC Electromagnetic Compatibility Directive / *Directive CE relative à la compatibilité électromagnétique*
X	**2011/65/EU**	**Gefährliche Stoffe in Elektro- und Elektronikgeräten (RoHS II) /** Dangerous materials in electrical and electronics devices (RoHS II) / *Substances dangereuses dans les appareils électriques et électroniques (RoHS II)*
X	**2012/19/EU**	**Elektro- und Elektronik - Altgeräte (WEEE)** / Electrical and electronics - old devices (WEEE) / *Électro et électronique - appareils de contralto (WEEE)*
X	**China – RoHS II**	**Umweltschutzgesetz** – China 2016-01 / Environment protection law / *Loi sur la protection de environnement*

Angewandte harmonisierte Normen: / Applied harmonized standards: / *Standards appliques et harmonises:*

	DIN EN 1127-1: 2011-10	**Explosionsfähige Atmosphären – Explosionsschutz - Teil 1: Grundlagen und Methodik** / Explosive atmospheres - Explosion prevention and protection - part 1: Basic concepts and methodology / *Atmosphères explosives - Protection contre les explosions - partie 1 : prescriptions et méthodologie*
	DIN EN 13463-1: 2009-07	**Nicht-elektrische Geräte für den Einsatz in explosionsgefährdeten Bereichen - Teil 1: Grundlagen und Anforderungen /** Non-electrical equipment for use in potentially explosive atmospheres - part 1: Basic method and requirements */ Appareils non électriques destinés à être utilisés en atmosphères explosibles - partie 1 : prescriptions et méthodologie*
	DIN EN 13463-5: 2011-10	**Nicht-elektrische Geräte für den Einsatz in explosionsgefährdeten Bereichen - Teil 5: Schutz durch konstruktive Sicherheit ‚c' /** Non-electrical equipment for use in potentially explosive atmospheres - part 5: Protection by constructional safety 'c' / *Appareils non électriques destinés à être utilisés en atmosphères explosibles - partie 5 : protection par sécurité de construction « c »*
X	**DIN EN ISO 12100: 2011-03**	**Sicherheit von Maschinen - Allgemeine Gestaltungsleitsätze Risikobeurteilung und Risikominderung /** Safety of machinery - General principles for design - Risk assessment and risk reduction / *Sécurité des machines - / Principes généraux pour l'évaluation des risques et la réduction des risques*
X	**DIN EN ISO 13857: 2008-06**	**Sicherheit von Maschinen - Sicherheitsabstände gegen das Erreichen von Gefährdungsbereichen mit den oberen und unteren Gliedmaßen** / Safety of machinery - Safety distances to prevent hazard zones being reached by upper and lower limbs / *Sécurité des machines - Distances de sécurité empêchant les membres supérieurs et inférieurs d'atteindre les zones dangereuses*
X	**DIN EN 1012-2: 2011-12**	**Kompressoren und Vakuumpumpen - Sicherheitsanforderungen - Teil 2: Vakuumpumpen** / Compressors and vacuum pumps - Safety requirements - part 2: Vacuum pumps / *Compresseurs et pompes à vide - Exigences de sécurité - partie 2: pompes à vide*
X	**DIN EN ISO 2151: 2009-01**	**Akustik - Geräuschmessnorm für Kompressoren und Vakuumpumpen - Verfahren der Genauigkeitsklasse 2** / Acoustics - Noise test code for compressors and vacuum pumps – Engineering method (grade 2) / *Acoustique - norme de mesure des émissions pour les compresseurs et les pompes à vide - Procédé de classe de précision 2*
X	**DIN EN 60204-1: 2014-10**	**Sicherheit von Maschinen - Elektrische Ausrüstung von Maschinen - Teil 1: Allgemeine Anforderungen** / Safety of machinery - Electrical equipment of machines - part 1: General requirements / *Sécurité des machines - Equipement électrique des machines - partie 1: Prescriptions générales*
X	**EN 61000-6-2: 2011-06**	**Elektromagnetische Verträglichkeit (EMV) - Teil 6-2: Fachgrundnormen - Störfestigkeit für Industriebereiche** / Electromagnetic compatibility (EMC) - part 6-2: Generic standards - Immunity for industrial environments / *Compatibilité électromagnétique (EMV) - partie 6-2: Normes génériques - Immunité pour les environnements industriels*
X	**EN 61000-6-4: 2011-09**	**Elektromagnetische Verträglichkeit (EMV) - Teil 6-4: Fachgrundnormen - Störaussendung für Industriebereiche** / Electromagnetic compatibility (EMC) - part 6-4: Generic standards - Emission standard for industrial environments environments / *Compatibilité électromagnétique - partie 6-4: Normes génériques - Emissions de parasites pour les activités industrielles*
X	**DIN EN 50110-1: 2014-02**	**Betrieb von elektrischen Anlagen /** Operation of electrical installations / *Fonctionnement des installations électriques*
X	**DIN EN 61010-1/A1:2015-04**	**Sicherheitsbestimmungen für elektrische Mess-, Steuer-, Regel- und Laborgeräte - Teil 1: Allgemeine Anforderungen** / Safety requirements for electrical equipment for measurement, control and laboratory use - part 1: General requirements / *Consignes de sécurité pour les appareils électriques de mesure, de commande, de régulation ou de laboratoire - partie 1: Prescriptions générales*

Datum / Data		**2016-12-20**
Qualitätsbeauftragter / Quality representative / *Délégué de qualité*	**Name** / Name / *Nom* **Gerd Reinhardt**	
Produktmanager / Product manager / *Directeur de produit*	**Name** / Name / *Nom* **Oliver Fickert**	