Operation Manual (EN)
Original version of the operation manual

Rotary vane pumps
Two-stage

Models:

Series CRVpro

CRVpro 16
CRVpro 24
CRVpro 30

P1700017
2017-08-07

EMEA
Gardner Denver Thomas GmbH
Am Vogelherd 20
98693 Ilmenau
Germany
Phone: +49 3677 604-0
Fax: +49 3677 604-131
E-Mail: welch.emea@gardnerdenver.com
www.welchvacuum.de

America
Gardner Denver Thomas Inc.
1601 Feehanville Drive
Suite 550
Mt. Prospect, IL 60056
USA
Phone: +1 847 676-8800
Fax: +1 847 677-8606
E-Mail: welch.na@gardnerdenver.com
www.welchvacuum.com

Asia Pacific
Gardner Denver
Room 2206, Qiangsheng Mansion
No. 145 Pujian Road
200127 Shanghai
China
Phone: +86 21 51860238
Fax: +86 21 50396221
E-Mail: welch.as@gardnerdenver.com
www.welchvacuum.com

Global Headquarters
Gardner Denver Thomas GmbH
Livry-Gargan-Str. 10
82256 Fürstenfeldbruck
Germany

We are constantly working on the further development of all our product types. Reprinting or reproduction of this manual, including extracts, is not allowed without the prior written permission of Co. Gardner Denver Thomas GmbH.

All rights under the copyright laws are expressly reserved by Co. Gardner Denver Thomas GmbH.

We reserve the right to make changes and amendments.

Contents

1 Important Information 1
1.1 Meaning of the Warning and Information notes 1
1.2 General Information 1
1.3 Target Groups 2
1.4 Intended Use 2
1.5 Use for an Unauthorized Purpose 2
1.6 Product Standards, Safety Regulations 3
2 Basic Safety Instructions 4
2.1 General Information 4
2.2 Electricity 4
2.3 Mechanical Systems 4
2.4 Hazardous Substances 5
2.5 High Temperatures 5
3 Description 6
3.1 Design 6
3.2 Area of Application 6
3.3 Scope of Delivery 7
3.4 Function 7
3.4.1 Principles of Vacuum Pump Operation 7
3.4.2 Working Principle of Rotary vane pumps 7
3.4.3 Working Principle of Two-Stage Rotary vane pumps (CRVpro Series) 8
3.4.4 Oil Functions 10
3.4.5 Pump Lubrication 10
3.4.6 Exhaust Filter 10
3.4.7 Gas Ballast 10
4 Technical Data 12
4.1 Dimensions 12
4.2 Pumping Speed / Intake Pressure ï Diagram 12
4.3 Device Data 13
4.4 Motor Data 13
4.5 Lubrication Data 13
4.6 Order Numbers 14
5 Installation and Operation 15
5.1 Unpacking 15
5.2 Pump Mounting 15
5.3 Pump Location / Environmental Conditions 15
5.4 General References 16
5.5 Installation and Connection 16
5.5.1 Connecting to the Electricity Supply 17
5.5.2 Installation of the Grounding Plug 18

Contents

5.5.3 Motor Protection ... 19
5.6 Starting-up ... 19
5.7 Operating Temperature ... 20
5.8 Oil for Drawing off Oxygen ... 20
5.9 Gas Ballast Control ... 20
5.10 Closing down ... 21
5.11 Storage ... 21
5.12 Scrap Disposal ... 21
6 Maintenance and Servicing ... 22
6.1 Oil Level Control ... 22
6.2 Oil Colour Check ... 23
6.3 Oil Change ... 23
6.3.1 Draining the Oil ... 23
6.3.2 Filling up with Oil ... 24
6.3.3 Flushing ... 24
6.3.4 Frequency of Oil Changes ... 25
6.4 Shaft Seal Replacement ... 25
6.5 Major Factory Repair ... 25
7 Troubleshooting ... 26
8 Overview of Accessories ... 27
8.1 Overview and Order Numbers for EMEA, Asia ... 27
8.2 Overview and Order Numbers for Americas ... 28
8.3 Inlet Condensor AKS 25 ... 29
8.4 Oil Mist Separator AKD 25 ... 30
8.5 Sorption trap SOF ... 30
9 Overview of Spare Parts ... 32
9.1 Fastening Kit ... 32
9.2 Seal Kit ... 33
9.3 Lip Seal Kit ... 33
9.4 Oil Drain Valve Kit ... 33
9.5 Service Kit ... 34
9.6 List of Spare Parts ... 35
10 EC Declaration ... 37
11 Global Contact ... 38

1 Important Information

1.1 Meaning of the Warning and Information notes

Take note of the warning notes which are in the following boxes:

	CAUTION ! / WARNING !
Hazard which may lead to serious injuries or material damage.	

	WARNING !
Hot surface which may lead to serious injuries or material damage.	

Information which are only relevant of CE operation are marked in following boxes:

CE	**ONLY RELEVANT FOR CE (220-240V / 50HZ) OPERATION**
Only relevant for CE 220-240V / 50Hz operation	

Information which are only relevant of UL operation are marked in following boxes:

For UL	**ONLY RELEVANT FOR UL (115V, 230V / 60HZ) OPERATION**
Only relevant for UL 115V, 230V / 60Hz operation	

1.2 General Information

	CAUTION !
IMPORTANT SAFETY INSTRUCTIONS - SAVE THESE INSTRUCTIONS **To reduce the risks of fire or explosion, electrical shock, and the injury to persons, read and understand all instructions included in this manual. Be familiar with the controls and the proper usage of the equipment.**	

The CE/UL sign is located on the rating plate. Observe the binding national and local regulations when fitting the pump into installations!

Note: The English version is the original version of the operation manual.

Our products are sold worldwide and can therefore be equipped with the typical national plugs and for the various voltages.

CE	ONLY RELEVANT FOR CE (220-240V / 50HZ) OPERATION

The Rotary vane pump conform to the following directives:

2006/42/EC	Directive on machinery
2012/19/EU	Directive on waste electrical and electronic equipment
2011/65/EU	Directive on the restriction of the use of certain hazardous substances in electrical and electronic equipment

1.3 Target Groups

This operating manual is intended for the personnel planning, operating and maintaining standard, two-stage, rotary vane pumps.
This group of people includes:

- Designers and fitters of vacuum apparatus
- Employees working on commercial laboratory and industrial vacuum technology applications
- Service personnel for rotary vane pumps

The personnel operating and maintaining the rotary vane pumps must have the technical competence required to perform the work that has to be done and understand the hazards involved. The user must authorize the operating personnel to do the work that has to be done. The personnel must have read and understood the complete operating manual before using the rotary vane pumps.
The operating manual must be kept at the place of use and be available to the personnel when required.

1.4 Intended Use

The layout of the rotary vane pump must be appropriate for the conditions of use. The user bears the sole responsibility for this.
The rotary vane pump may only be operated under the conditions stated:

- in the ñTechnical Dataòchapter
- on the type plate and
- in the technical specification for the order concerned

1.5 Use for an Unauthorized Purpose

It is forbidden to use the pump for applications deviating from the technical data stated on the type plate, in the operating manual or the conditions stated in the supply contract, or to operate it with missing or defective protective devices.

The CRVpro standard pumps are not suited for pumping liquids.

1.6 Product Standards, Safety Regulations

CE	**ONLY RELEVANT FOR CE (220-240V / 50HZ) OPERATION**

The rotary vane pump meet the following product standards:

EN 60204-1	Safety of machinery - Electrical equipment of machines - Part 1: General requirements

Observe the standards and regulations applying in your country when you use the rotary vane pump.

2 Basic Safety Instructions

IMPORTANT SAFETY INSTRUCTIONS
SAVE THESE INSTRUCTIONS

2.1 General Information

⚠	**CAUTION !**
To reduce the risks of fire or explosion, electrical shock, and the injury to persons, read and understand all instructions included in this manual. Be familiar with the controls and the proper usage of the equipment	

- Warning notices must be observed. Disregarding them may lead to damage to health and property.
- The rotary vane pumps must be operated by personnel who can detect impending dangers and take action to prevent them from materializing.
- The rotary vane pumps is intended for indoor use only.
- The manufacturer or authorized workshops will only service or maintain the rotary vane pump if it is accompanied by a fully completed damage report. Precise information about the contamination (also negative information if necessary) and thorough cleaning of the rotary vane pump are legally binding parts of the contract.
- Contaminated rotary vane pumps and their individual parts must be disposed of in accordance with the legal regulations. The local regulations apply in foreign countries.

2.2 Electricity

Please note the following when connecting to the electrical power supply system:

- The electrical power supply system must have a protective connector according to IEC 60364-4-41 (for CE operation only).
- The protective connector should not have any breaks.
- The connecting cable should not be damaged.

2.3 Mechanical Systems

Improper use can lead to injuries or material damage. Observe the following instructions:

- Only operate the rotary vane pumps with the specified flange-mounting components.
- Hazardous substances must be separated out as far as this is technically possible before they reach the pump.
- External mechanical stresses and vibrations must not be transmitted to the pump. Only use flexible vacuum hoses for connecting rotary vane pumps.
- The pump should not be used to suck up fluids. Lay the exhaust pipe so that it slopes downwards, so allowing condensate to flow out of the pump. Collect the condensate and dispose of it in an environmentally compatible manner.
- Maintain a space of least 20 cm between the pump and adjacent parts in order to enable the pump to cool.

⚠	**CAUTION !**
Solid particles in the pumping medium impair the pumping action and can lead to damage. Prevent solid particles penetrating into the pump!	

2.4 Hazardous Substances

⚠	**CAUTION !**
The operating company bears the responsibility for the use of the Rotary vane pump.	

Hazardous substances in the gases to be pumped can cause personal injuries and property damage. Pay attention to the warning notices for handling hazardous substances.
The local regulations apply in foreign countries.

Combustible and explosive Gases
Examine before switching on whether that can form gas combustible gas/air mixtures which can be promoted! Consider the regulations of the guideline 1999/92/EC.
It is not permitted to pump gases that are combustible or prone to explosion.

Aggressive gases
The rotary vane pumps are not certified according to ATEX directive 2014/34/EU.

Poisonous gases
Use a separator when pumping poisonous or harmful gases. Prevent such substances from leaking out of the appliance or pump. Treat these substances according to the applicable environmental protection regulations.
Test the strength and leak-tightness of the connecting lines and the connected apparatus.
Prevent environmental poisons, e.g. mercury, getting into the rotary vane pumps.

2.5 High Temperatures

The rotary vane pump may heat up as a result of the temperature of the gas being pumped and through intrinsic heating. In dependence on the operation mode, the casing temperature can reach 90 °C (motor). Prevent the following maximum permissible temperature from being exceeded.

- + 40 °C for the environment

The motor is protected against overload by a suitable protective device.

3 Description

3.1 Design

The CRVpro series vacuum pumps are oil-sealed, two-stage rotary vane pumps.
The drive motor is directly flange-mounted onto the motor cover of the pump holder and the pump shaft and the motor shaft are connected to each other by an elastic coupling.
The bearings of the interior pump body are force-fed lubricated sliding bearings.

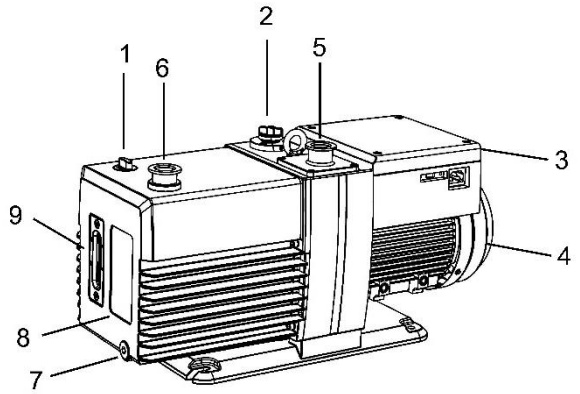

1 -	Screw-plug for oil filling
2 -	Rotary knob for setting the gas ballast valve; direction of rotation: to the left = open to the right = closed
3 -	On / Off switch
4 -	Drive motor
5 -	Suction port
6 -	Exhaust port
7 -	Oil drain screw-plug
8 -	Type plate
9 -	Oil inspection glass

Fig. 1 Rotary vane pump (CRVpro 16, 24, 30)

3.2 Area of Application

The range of application of our oil-sealed rotary vane pumps encompasses the entire field of vacuum technology, both for use in the laboratory and in industry.

The task is to create an ultimate pressure of 10^{-3} mbar (ultimate pressure partial 10^{-4} mbar):

- as a single vacuum pump
- as a fore-vacuum pump for oil diffusion pumps or as turbomolecular pumps

The rotary vane pump can evacuate containers or vacuum installations up into the high vacuum range.

⚠	**WARNING !**
The rotary vane pump must not be used for extracting explosive gases or vapours. The rotary vane pump must not be operated in rooms which might contain explosive gases.	

3.3 Scope of Delivery

Followed the scope of delivery for standard order numbers. The scope of delivery for other order numbers is specified in the supply contract.

		Americas				EMEA	Asia
Description		115V, Standard	115V, Hose barb adapter	115V, Flare fitting, handle	230V, hose barb adapter	230V, Standard	230V, CN Plug
Ordering Information	**CRVpro 16**	**3161-00**	**3161-01**	**3161-02**	**3162-01**	**3162-00**	**3163-00**
	CRVpro 24	**3241-00**	**3241-01**		**3242-01**	**3242-00**	**3243-00**
	CRVpro 30	**3301-00**	**3301-01**		**3302-01**	**3302-00**	**3303-00**
Factory wired for		115V / 60 Hz	115V / 60 Hz	115V / 60 Hz	220-240V / 50Hz, 230V/60Hz	220-240V / 50Hz, 230V/60Hz	220-240V / 50Hz, 230V/60Hz
Centering ring with dirt trap		1	1	1	1	1	1
Centering ring		1	1	1	1	1	1
Protection cap		1	1	1	1	1	1
Plastic ring		1	1	1	1	1	1
Clamping ring (DN16KF)		-	-	-	-	-	-
Clamping ring (DN25KF)		2	2	2	2	2	2
Manual (English)		1	1	1	1	1	1
Manual (German)		1	-	-	-	1	-
1 liter vacuum oil bottle		3	3	3	3	3	3
Line cord (US-plug; 115V NEMA 5-15)		1	1	1	-	-	-
Line cord (US-plug; 230V NEMA 6-15)		-	-	-	1	-	-
Line cord (EU-plug; CEE 7/4)		-	-	-	1	1	-
Line cord (UK-plug; BS1363)		-	-	-	-	1	-
Line cord (CN-plug; AS/NZS 3112)		-	-	-	-	-	1
Hose barb adapter (NW16 5/8")		-	-	-	-	-	-
Hose barb adapter (NW 25 3/4")		-	1	-	1	-	-
Flange adapter (NW16 to NW25)		-	-	-	-	-	-
IEC male to female		-	-	-	-	-	-
Flare fitting		-	-	1	-	-	-
Handle		-	-	1	-	-	-

3.4 Function

3.4.1 Principles of Vacuum Pump Operation

The main purpose of a vacuum pump is to reduce the pressure in a vessel or a closed system. The degree of pressure reduction is dependent upon the requirements of the application and the type of vacuum pump employed.

3.4.2 Working Principle of Rotary vane pumps

Pressure reduction in a closed system is accomplished by repeatedly removing a portion of the original volume of gas contained in the system. Removal is performed by the action of the rotating elements of the pump which cause a given space to be successfully enlarged and diminished. Figure 2 illustrates a chapter through a typical stage of rotary-vane pump. Note that this figure is not intended to illustrate exactly the internal components of the pumps; its purpose is to illustrate the general operating principles of vacuum pumps.

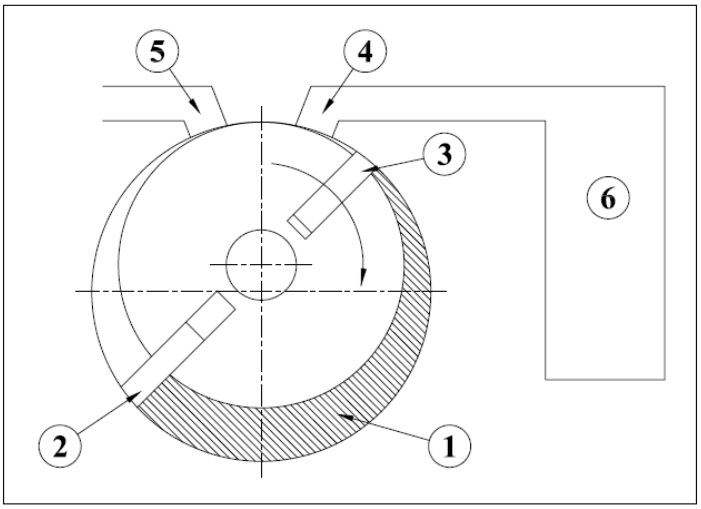

Fig. 2 Rotary vane pump Principle

The rotary action of the pump creates a hollow space of chamber (1) which expands as the pump rotates. As the chamber expands, the pressure in the chamber decreases. As a result, gas is drawn into the chamber due to the difference in pressure between the chamber and the inlet (4) to the chamber (The inlet is the only place where gas can flow into the chamber). Once the vane (3) moves past the inlet (4), it seals the inlet against the chamber (1) and the gas becomes trapped between the vanes (2 and 3). The chamber (1) formed by the enclosed space between the vanes then begins to decrease in volume as the rotor revolves, compressing the gas. The pressure of the compressed gas becomes greater than atmospheric pressure. When the vane (2) moves past the exhaust port (5) the compressed gas in the chamber is forced out through the exhaust port. This expansion/compression cycle constitutes one complete cycle of the pump operation. This cycle is repeated as the vane (2) passes the intake port and seals it against the atmosphere. Therefore, two pump cycles are performed during each revolution of the pump rotor.

3.4.3 Working Principle of Two-Stage Rotary vane pumps (CRVpro Series)

Two pump stages (fore-stage and high-stage) are arranged in series in order to improve the end pressure and the pumping speed at lower pressures. The intake takes place in the first stage (high-stage), the compression and the outlet in the second stage (fore-stage).

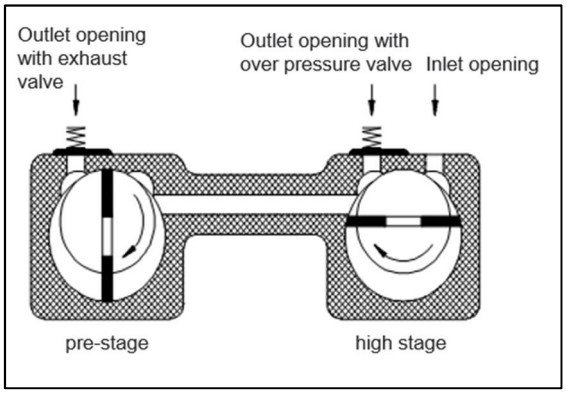

Fig. 3 Pre-stage / high stage

When in operation, the intake stage is at lower pressure and the exhaust stage is at higher pressure relative to each other. Each stage contains a rotor assembly consisting of a rotor with two vanes and a stator. The two rotors are combined on one shaft, and the two stators are combined in a common housing. The pump shaft turns the rotors, causing the vanes in each chapter to sweep the surface of their stators. The vanes are pressed against the stators by centrifugal force. Each stage has an exhaust valve. Gas expelled from the first stage exhaust passes through an interstage port to the intake of the second stage. The second stage compresses the gas further, then expels it from the second stage exhaust valve to the atmosphere. The oil carried along with the gas is separated out by a filter (available accessory). An adjustable gas ballast valve is located in the pumpôs exhaust stage. The purpose of the gas ballast is to prevent vapours condensing in the vacuum pump. A dosed quantity of air (gas ballast) can be let into the pump body during the compression by opening the gas ballast valve. The function of the gas ballast valve is described more in detail in chapter 3.4.7 ñGas Ballastò.

Effects of Continued Pressure Reduction

The quantity of gas in the vessel (6) is reduced with each evacuation cycle. The gas remaining in the vessel expands to fill the vessel and consequently with each cycle the pressure in the vessel is reduced. This is a manifestation of Boyleôs Law which states that, for a constant temperature, the volume of a body of gas is inversely proportional to its pressure; i.e., if the volume is enlarged the pressure must be reduced.
As the amount of gas in the vessel is steadily diminished, its pressure is correspondingly reduced. The action of the pump must therefore compress a successively smaller quantity of gas with each cycle to something greater than atmospheric pressure in order to expel it from the pump.
At the beginning of an evacuation sequence, the compression ratio is very small. In the first cycle of operation the pump draws in a volume of gas at atmospheric pressure and expels it at approximately atmospheric pressure. Since the exhaust valve is generally spring loaded to provide a good seal, the pressure required to open it is somewhat greater than atmospheric pressure.

Ultimate Pressure

As described previously, a quantity of gas is removed from the system with each cycle of the pump. Therefore, the pressure of the gas remaining in the system is reduced with each pump cycle. Since the pump can remove only a small portion of the gas with each pump cycle, it is obvious that this method of evacuation can never completely remove all the gas in the vessel. In addition to this, all the components of the system contain minute sources of gas leakage which are impossible to seal completely against atmospheric pressure. Outgassing of materials within the system provide additional sources of gas.
As a result, after prolonged pumping, a state of equilibrium is reached in which the gas introduced from all the leakage sources is balanced by the ability of the pump to remove gas from the system. This state of equilibrium is referred to as the ultimate pressure or blankoff pressure of the pump and its system. No matter how much additional pumping time is provided, no further reduction in system pressure will be accomplished once ultimate pressure is attained.

Intake Anti-suck back Protection

When power to the pump is turned off, this device closes automatically, maintaining vacuum in the system being evacuated, and vents the inside of the pump to atmospheric pressure.

3.4.4 Oil Functions

⚠	**WARNING !**
Vacuum pump is shipped without oil inside to prevent possible spillage during shipment. Oil must be added prior to use!	

The oil fulfils the following functions in the vacuum pump:

- lubricating the sliding parts, such as rotor, vane, radial shaft seals
- sealing the moving parts against the stator wall to reduce leaks
- conducting the heat of compression to the metal walls (cooling)

The oil transports the polluted particles and corrosive media and thus effects continuous cleaning of the internal surfaces.

3.4.5 Pump Lubrication

To ensure efficient operation and proper maintenance, and to minimize noise and oil vapors, it is important to use the correct type and quantity of oil. DirectorrÊ Premium vacuum oil has been especially developed to have the proper viscosity, low vapor pressure, and chemical stability needed to produce peak pumping efficiency. The ultimate vacuum guarantee on Welch pumps applies only when this oil is used. Each pump is supplied with sufficient oil for filling. Additional oil is available. See chapter 8 Overview of Accessories.

3.4.6 Exhaust Filter

Any oil-sealed vacuum pump tends to discharge oil mist from its exhaust port when the pump operates under high-flow conditions, such as when the pumpõs intake is at or near atmospheric pressure. Typically, oil mist in the form of a white puff of õsmokeò can be seen from the exhaust port when no filter is used. Once the vacuum level and the corresponding air flow through the pump are reduced, very little, if any, oil mist will be emitted. An exhaust filter is recommended for any vacuum pump installation where the pump operates at high intake pressures for a prolonged period of time. Oil droplets entrained in the pumpõs exhaust are removed by the exhaust filter element. Use of an exhaust filter typically reduces or baffles pump noise as well. Exhaust filters are sometimes referred to as oil mist eliminators. See chapter 8 Overview of Accessories.

3.4.7 Gas Ballast

Condensates could have collected in the vacuum pump if:

- the vacuum pump is new
- it has not been used for long periods
- the pump's maximum tolerance of water vapour pressure has been exceeded

When pumping condensable vapours, they may be compressed during the compression phase above the saturated vapour pressure and condense.

This causes considerable deterioration in the vacuum pumpõs performance:

- ultimate pressure is not achieved
- corrosion occurs
- heavy oil contamination and formation of emulsions

⚠	**CAUTION !**
Operating with gas ballast increases the operating temperature of the vacuum pump by 5 – 10 K.	

The gas ballast valve can increase the pumpôs water vapour tolerance. In many vacuum pump applications the gases being pumped from a system are a combination of permanent gases and undesirable vapours such as water vapour. Under some conditions, the vapours condense in the second stage of the pump and contaminate the oil. The gas ballast valve reduces oil contamination by decreasing or eliminating vapour condensation.
Vapour condensation is most likely to take place when the gas compression ratio is high, i.e. when the pump compresses a relatively large volume of gas to a small volume. Whether or not condensation takes place is dependent upon several factors, including the proportion of permanent gases to vapours at the pump intake. If the gases being pumped consist entirely of vapours, condensation will definitely occur unless the gas ballast valve is opened. The gas ballast valve adds a small amount of air at atmospheric pressure to the gas being compressed in the second stage. This reduces the compression required to push the gas out past the exhaust valve (less reduction in volume is required), and therefore reduces or eliminates condensation.
When the gas ballast valve is open, the pump has to work a little harder, resulting in a slight increase in operating temperature. The increase in temperature is small, however, and is not harmful to the pump. Also, the pump is slightly noisier, and the pumpôs ultimate pressure is somewhat reduced. Therefore, the gas ballast valve should be kept closed when it is not needed. Note that the gas ballast is not equally effective on all different types of chemical vapours, so it may not always eliminate condensation completely.
Should condensate form despite actuation of the gas ballast device, the suction port must be closed and the pump operated with gas ballast for a lengthy period (about 2 hours).

4 Technical Data

4.1 Dimensions

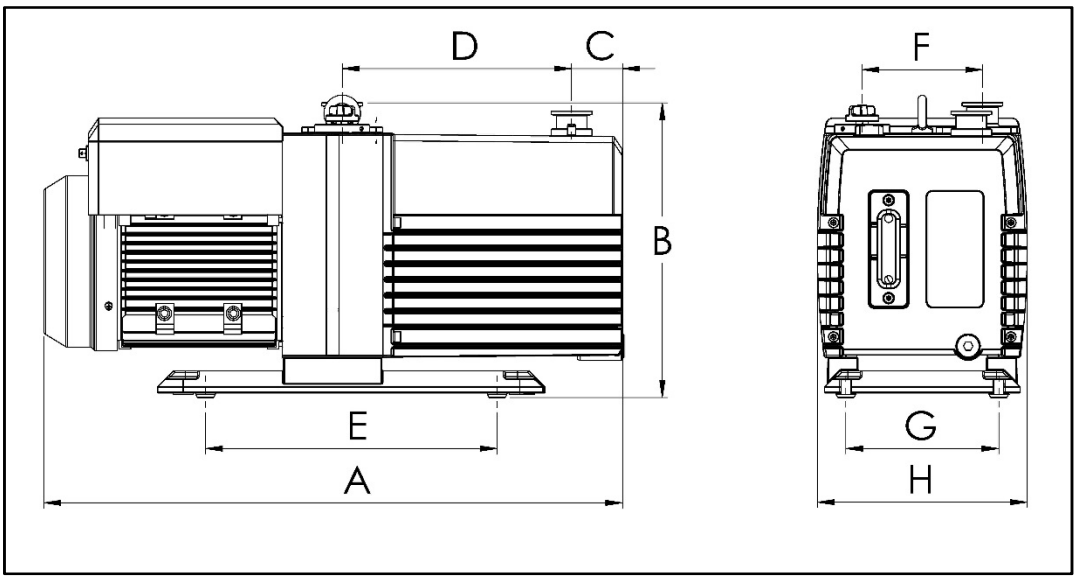

Fig. 4 Dimensions (in mm)

Pump type	A	B	C	D	E	F	G	H
	(in mm)							
CRVpro 16	569	281	50	225	286	118	150	206
CRVpro 24	569	281	50	225	286	118	150	206
CRVpro 30	569	281	50	225	286	118	150	206

4.2 Pumping Speed / Intake Pressure – Diagram

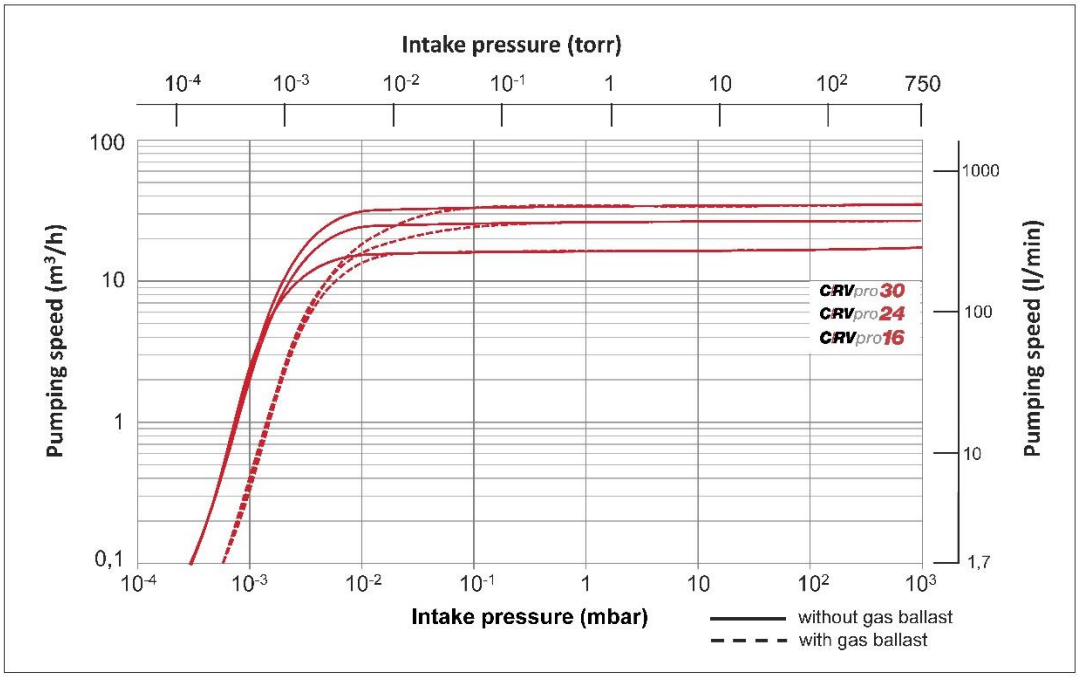

Fig. 5 Pumping Speed / Intake Pressure - Diagram CRVpro 16, 24, 30

4.3 Device Data

Parameter	Unit	CRVpro 16	CRVpro 24	CRVpro 30
Free Air Displacement (max. pumping speed)				
- @ 50Hz	m^3/h (L/min)	18.3 (306)	26.2 (438)	33.1 (553)
- @ 60Hz	CFM (L/min)	12.8 (362)	18.3 (518)	22.1 (625)
Pumping speed (Ø-data 133 to 1013 mbar)				
- @ 50Hz	m^3/h (L/min)	16.8 (281)	24 (401)	29 (484)
- @ 60Hz	CFM (L/min)	11.9 (337)	17 (481)	20.5 (580)
Ultimate pressure				
- without gas ballast partial	mbar (Torr)	3×10^{-4} (2×10^{-4})		
- without gas ballast total	mbar (Torr)	3×10^{-3} (2×10^{-3})		
- with gas ballast open 1 total	mbar (Torr)	5×10^{-3} (4×10^{-3})		
- with gas ballast open 2 total	mbar (Torr)	6×10^{-3} (5×10^{-3})		
Max. inlet pressure	bar	1.5		
Max. outlet pressure	bar	0.2		
Connection flanges	DN	KF25		
Ambient temperature	°C	10 - 40		
Noise level (50Hz)	dB (A)	Ò55		
Oil filling	ml	2400	2200	2100
Dimensions (W/D/H)	mm (inch)	569/206/289 (22.4/8.1/11.4)		
Shipping Carton Dimensions (W/D/H)	mm (inch)	680/381/381 (26.7/15/15)		
Weight	kg (lbs.)	37 (81.6)	38.5 (84.9)	39.5 (87)
Shipping Weight	kg (lbs.)	42 (92.6)	43.5 (95.9)	44.5 (98.1)

4.4 Motor Data

Parameter	Unit	CRVpro 16,24,30	
		50 Hz	60 Hz
Frequency	Hz	Frequency 50 Hz CE	Frequency 60 Hz (for UL)
Voltage	V	220-240	115 / 230
Motor power	kW	0.7	0.85
Nominal current	A	4.8	8.0 / 4.2
Motor speed 50/60Hz	rpm	1450	1715 / 1750
Type of protection		IP44	

4.5 Lubrication Data

Welch DirectorrÊ Premium vacuum oil is a triple-distilled hydrocarbon oil using severely hydrotreated base stock. The oil is designed to resist breakdown at higher RPMs and operating temperatures of direct-drive vacuum pumps. The hydrotreating virtually eliminates aromatics and sulfur to give good resistance to sludge and varnish formation over time in corrosive environments. DirectorrÊ Premium vacuum oil enables Welch direct-drive vacuum pumps to maintain the highest vacuum performance over time. The oil is light yellow.

CAS No.	64742-65-0
Vapor Pressure (at 25°C)	1×10^{-6} mbar (1×10^{-6} torr)
Viscosity (at 40°C)	65 cSt (305 SUS)
Specific Gravity	0.87

The technical data and operating characteristics of rotary vane pumps are only guaranteed if original Welch Directorr™ Premium vacuum oil is used!

4.6 Order Numbers

Choose the configuration of CRVpro 16, 24 and 30 according to your needs:

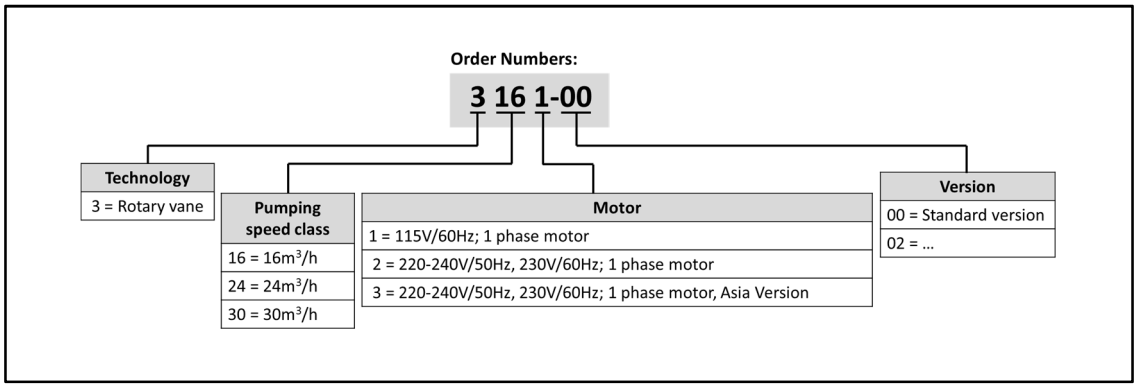

Fig. 6 Order number configuration for CRVpro 16, 24, 30

Lubrication

Order number for customer located in Americas:

Description		Order no.
DirectorrÊ Premium vacuum oil:	1 quart	8995P-11
	1 gallon	8995P-15
	5 gallon	8995P-20
	55 gallon	8995P-25

Order number for customer located in EMEA, Asia:

Description		Order no.
DirectorrÊ Premium vacuum oil:	1 liter	800995-01
	5 liter	800995-05
	10 liter	800995-10
	20 liter	800995-20
	200 liter	800995-200

5 Installation and Operation

5.1 Unpacking

Carefully unpack the rotary vane pump. Keep all paperwork and inspection tags for future reference.

Check the pump for:

- Transport damage
- Conformity with the specifications of the supply contract (model, electrical supply data)
- Completeness of the delivery

Please inform us without delay if there are discrepancies between the delivery and the contractually agreed scope of delivery, or if damage is detected.
Please take note of the general terms of business of the manufacturing firm.

In case of a claim under warranty, the device must be returned in packaging that is suitable for protecting it during transport.

5.2 Pump Mounting

For more rigid mounting requirements the pump base can be bolted directly to a surface using the 2 mounting holes and 2 slots featured on the base.

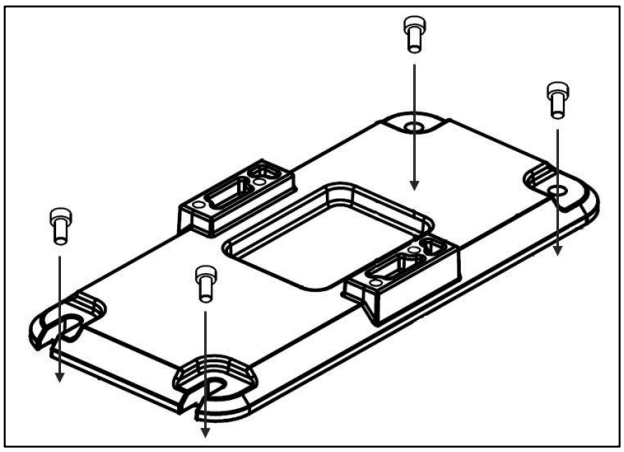

Fig. 7 Pump mounting

5.3 Pump Location / Environmental Conditions

The pump should be located in a clean and well-ventilated area and adequate space should be provided wherever possible for routine maintenance such as oil changes. For best performance, the pump should be located as closely as possible to its system. Determining factors for pump location should include length and size of connections, the number of bends, and the type of exhaust connections.

5.4 General References

⚠	**CAUTION !**
On continuous operation it's recommended to run the pump below 10mbar maximum vacuum pressure.	

According to its intended use the capacity of the vacuum pump depends on:

- the kind of assembly
- accessories
- the oil used
- additional connections
- vacuum piping system

In addition, fail-safe operation is determined by the mode of maintenance. Elements such as valves, filters, condensers should be provided as early as in the conception. The materials of the vacuum piping should be selected in such a way that they will be resistant to the media to be delivered!

5.5 Installation and Connection

1. Set the rotary vane pump on a flat and horizontal surface. If more rigid mounting is required, bolt the pump base to the surface. See chapter 5.2 Pump Mounting.
2. Remove the clamping ring and the protection cap of the suction and exhaust ports.
3. Attach the vacuum connection to the suction port and the exhaust pipe on the exhaust port. The suction and pressure ports must not be connected the wrong way round by mistake!

⚠	**WARNING !**
Never block or impede air flow from the exhaust port. High pressure can build up within the oil reservoir if the exhaust port is blocked. Check frequently, especially if exhaust is piped out of the building.	

⚠	**WARNING !**
Consider the warning reference on the terminal box of the motor!	

4. Check the AC power outlet to be sure that it is the same voltage and phase as the pump motor.
5. Recheck the oil level. If needed refill oil ï see chapter 6.3.2 Filling up with Oil. Please note that the pump are delivered without oil filling. Initial oil filling has to be done by the user.
6. Connect the rotary vane pump to the electrical supply. Please note the explanations on chapter 5.5.1 Connecting to the Electricity Supply.
7. How to operate the pump see chapter 5.6 Starting-up.

5.5.1 Connecting to the Electricity Supply

The standard pump is supplied with complete electrical wiring. It is connected via an appliance cable and a power supply plug. If the supply cord is damaged, it must be replaced by the manufacturer, its service agent or similarly qualified persons in order to avoid a hazard.

⚠	**WARNING !**
Should the user change the electrical connection, for example for fitting into a system, then this may only be performed by an electrical specialist under observance of the accident prevention regulations.	

- It is generally suggested to protect the motor by 120 percent of is rated power in consideration of the starting and switch-on response.
- Device connection cables and plugs must comply with the requirements of the line disconnection devices (current, output).
- The customer/user shall install the main and emergency stop switches.

5.5.2 Installation of the Grounding Plug

For UL	ONLY RELEVANT FOR UL (115V, 230V / 60HZ) OPERATION

This product must be grounded. In the event of an electrical short circuit, grounding reduces the risk of electric shock by providing an escape wire for the electric current. This product is equipped with a cord having a grounding wire with an appropriate grounding plug. The plug must be plugged into an outlet that is properly installed and grounded in accordance with all local codes and ordinances.

Check with a qualified electrician or serviceman when the grounding instructions are not completely understood, or when in doubt as to whether the product is properly grounded. Do not modify the plug provided; if it does not fit the outlet, have the proper outlet installed by a qualified electrician.

For 115V/60Hz version: this product is for use on a nominal 120-V circuit and has a grounding plug similar to the plug illustrated in Fig 9. Only connect the product to an outlet having the same configuration as the plug. Do not use an adapter with this product.

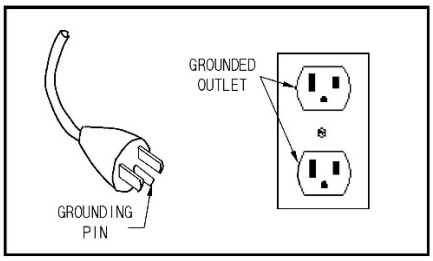

Fig. 8 Grounding plug illustration

For 230V/60Hz version: this product is for use on a circuit having a nominal rating more than 120V and is factory-equipped with a specific electric cord and plug for connection to a proper electric circuit. Only connect the product to an outlet having the same configuration as the plug. Do not use an adapter with this product. When the product must be reconnected for use on a different type of electric circuit, the reconnection shall be made by qualified service personnel.

Use only a 3-wire extension cord that has a 3-blade grounding plug, and a 3-slot receptacle that accepts the plug on the product. Make sure your extension cord is not damaged. When using an extension cord, be sure to use one heavy enough to carry the current your product draws. For lengths less than 25 ft, 14 AWG extension cords shall be used. An undersized cord results in a drop in line voltage and loss of power and overheating.

WARNING !

Improper installation of the grounding plug is able to result in a risk of electric shock. When repair or replacement of the cord or plug is required, do not connect the grounding wire to either flat blade terminal. The wire with insulation having an outer surface that is green with or without yellow stripes is the grounding wire.

5.5.3 Motor Protection

All A.C. motors are provided with a thermal overload protection ex works, protecting the motor and vacuum pump from damage or destruction, respectively. The motor manufacturer makes motor thermal overload protection available as an aid to minimize motor failure. Overload protection is a standard feature on the single-phase motor. The 115V motor has overload protection plus automatic reset after cool down. The 230V motor has overload protection plus manual reset after cool down. Once the thermal protector operated the user must turn off the pump and restart manually after cool down.

⚠	**CAUTION !**
The 115V motor has thermal overload protection plus automatic reset after cool down. **The 230V motor has overload protection plus manual reset after cool down. Once the thermal protector operated the user must turn off the pump and restart manually after cool down.**	

5.6 Starting-up

Observe the basic safety instructions when using the pump.

Before using the pump for the first time, it is recommended to spend a few minutes inspecting the pump and its electrical and vacuum connections. Please notice the information which are listed in chapter 5 Installation and Operation.

1. Connect the power cord to the power outlet.
2. Recheck the oil level and add or remove oil as needed. How to do this see chapter 6.1 Oil Level Control.
3. Close off the pump intake and the gas ballast valve, and run the pump at blankoff for a few minutes. The gurgling noise should go away after a few minutes of running; it is caused by the high volume of air that flows through the pump when the pump is first turned on. If the gurgling noise does not stop, check the oil level again to see if it is low. Also check the pump intake fitting to be sure that it is tight.
4. Once proper pump operation has been verified, the pump intake can be opened to the vacuum system.
5. After running the pump for a few minutes, check the oil level again. If the level is too high or too low, stop the pump, vent it to the atmosphere and add or remove oil as needed ï see chapter 6.3 Oil Change.
6. Before starting the pump when connection to the vacuum system, check all vacuum connections.

⚠	**CAUTION !**
Check the oil level prior to switching on the vacuum pump!	

5.7 Operating Temperature

The function of the vacuum pump filled with DirectorrÊ Premium vacuum oil is guaranteed between ambient temperatures of 10°C and 40°C. The lowest starting temperature is 12°C. The pump must be vented on the suction-side (suction port open).

	WARNING !
In dependence on the operation mode, the casing temperature can reach 90°C. Make sure that the vacuum pump has not been installed in an accessible area, and make provision for a guard against contacts!	

5.8 Oil for Drawing off Oxygen

	WARNING !
Pump should be not used for oxygen service! Oxygen at atmospheric pressure is exceptionally dangerous!	

For drawing off oxygen containing mixtures or pure oxygen the following must be taken into consideration:

- Mineral oils are flammable
- The more they oxidise, the quicker they lose their properties. For this reason they only can be used up to an oxygen percentage of maximum 30 per cent in the medium to be delivered.

In order to prevent any accumulation of oxygen in the discharge space, neutral gas such as nitrogen may be let in through a special inlet assembly. The percentage of oxygen is being reduced. The added amount of gas should be 5 times as much as the percentage of oxygen.

	CAUTION ! / WARNING !
There is a risk of explosion when pumping oxygen at a concentration above 30 percent.	

5.9 Gas Ballast Control

The principle of the gas ballast is described in chapter 3.4.7 Gas Ballast. To open or close the gas ballast turn the gas ballast switch to the position ñopen 1ò, ñopen 2ò or ñcloseò.

Operation with gas ballast when drawing off condensable vapours

We suggest operation with the gas ballast valve open, provided that the composition of gas in the vacuum pump to be drawn off is not known and cannot be ruled out.
If condensable gas and vapours are to be delivered, the latter or their condensates will mix with the oil. As a result of this, the pump performance will degrade. If the gas contains small amount of condensable gas, set the gas ballast to position ñopen 1ò. In case of more vapor use gas ballast position ñopen 2ò. With position ñopen 2ò gas ballast opened to the maximum.

5.10 Closing down

A few simple precautions are necessary before performing a pump shutdown.

1. If a gauge is connected to the system, first isolate the gauge, then turn off the power to the pump and open the system to the atmosphere.
2. If condensable media have been pumped, the vacuum pump must be run after pumping with the gas ballast valve open and the intake pipe closed.
3. If the vacuum pump is not going to be used for a sometime after pumping aggressive or corrosive media, or if it not going to be used for a long time, then proceed as follows:
    - If the pump oil is contaminated and the pump is going to be stored for a prolonged period, the oil should be changed before the pump is stored. Even if a pump is stored for a long period with oil initially in good condition, check the oil when the pump is restarted, and change the oil if necessary.
    - Close connecting ports with a rubber stopper or other suitable cover to protect the pump against contamination. An intake screen is furnished to prevent loose particles from entering.

	WARNING !
Take appropriate safety measures in case of having delivered dangerous media!	

5.11 Storage

The pumps are to be stored in a low-dust, interior room within the temperature range from + 5 to + 40 °C and at a relative air humidity < 90%.
Leave the protective elements on the suction and pressure ports. Another equally good protection may be used.

If the pump oil is contaminated and the pump is going to be stored for a prolonged period, the oil should be changed before the pump is stored. Even if a pump is stored for a long period with oil initially in good condition, check the oil when the pump is restarted, and change the oil if necessary.

5.12 Scrap Disposal

	CAUTION !
The rotary vane pumps must be disposed of in accordance with the 2012/19/EU directive and the specific national regulations. **Contaminated rotary vane pumps must be decontaminated according to the laws.**	

6 Maintenance and Servicing

Under normal operating conditions the maintenance of the Rotary vane pump is limited to:

- external cleaning
- checking running noises
- checking the level and quality of the oil
- regular oil changes

These maintenance intervals must be specified according to the prevailing operating conditions and adhered to. The bearings of the drive motors are life-long lubricated and so maintenance-free.

⚠	**CAUTION !**
Only perform the work that is described here, and that which is permitted to be done by the user. All other maintenance and service work may only be performed by the manufacturer or a dealer authorized by him. **Beware of the pump parts being possibly contaminated by hazardous substances. Wear protective clothing if there is contamination.**	

⚠	**WARNING !**
During repair or maintenance work which could endanger people because of moving or electrically live components, the vacuum pump must be made safe by removing the mains supply plug from the socket or by switching off the main contractor and preventing it from being switched on again!	

6.1 Oil Level Control

⚠	**CAUTION !**
Check the oil level regularly!	

The oil consumption varies according to the vacuum pump's operating conditions. In order to keep the vacuum pump at all times in an optimum operating condition, the oil level must be inspected at the oil sight glass. The oil level must at all times be showing between the upper and lower markings on the oil sight glass. The oil must be topped up if the oil level falls to the lower mark. We recommend to operate pump with oil filling at upper marking FULL. This minimize the service needs and allows better dilution of contaminants.

When additional oil is required, use only DirectorrÊ Premium vacuum oil, pump performance is not guaranteed with other brands of oil.

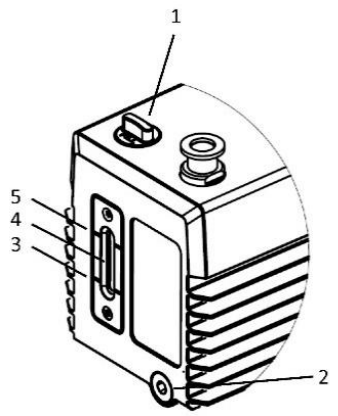

1 -	Oil fill plug
2 -	Oil drain plug
3 -	Lower marking MIN
4 -	Oil sight glass
5 -	Upper marking FULL

Fig. 9 Oil level control

6.2 Oil Colour Check

WARNING !

The condition and quality of the pump oil have a substantial effect upon the performance and operational readiness of the vacuum pump!

Comparing the colour of a sample of the pump oil with fresh oil provides an indication of the contamination of the pump oil. You obtain the oil needed for testing from the oil drain aperture with the vacuum pump switched off and at operating temperature.

Brown or black oil or oil smelling as if it has burnt must be removed from the vacuum pump. Flush the vacuum pump and fill up with fresh oil.

6.3 Oil Change

WARNING !

If the vacuum pump has been used to pump media which are dangerous to health then all measures must be taken to protect the service and operating personnel!

6.3.1 Draining the Oil

1. Block the inlet port and switch on the vacuum pump and let it work for about 10 minutes to warm the oil.
2. Switch off the pump, disconnect from the power outlet and from the vacuum system.
3. Unscrew the oil drain plug from the pump casing while the pump is at operating temperature.
4. Tilt the vacuum pump slightly, catches the oil in a suitable vessel and dispose of it in accordance with the applicable regulations.

⚠	**WARNING !**
Avoid skin contact with the oil! Dispose of the oil in accordance with the valid environmental protection regulations!	

6.3.2 Filling up with Oil

1. Switch off the pump, disconnect from the power outlet and from the vacuum system.
2. Remove the oil fill plug.
3. Pour in the oil until it reaches the upper mark ñFULLò
4. Screw in the oil fill plug together with the seal once again.
5. Block the inlet port and switch on the vacuum pump and let it work for about 2 minutes.
6. Check the oil level when the pump is switched off, repeat if necessary.

⚠	**WARNING !**
Avoid skin contact with the oil! Wash hands thoroughly after handling. Keep out of reach of children. Dispose of the oil in accordance with the valid environmental protection regulations! Do not overfill, excess oil tends to be splashed out the pump exhaust! Use only Directorr™ Premium vacuum oil.	

For best dilution of contaminants, especially on chemical applications, we recommend to keep always oil level at max.

6.3.3 Flushing

If the oil is heavily contaminated, the vacuum pump must be flushed, e.g.:

- heavy clouding by condensates
- suspended particles such as dust, fibres, abraded particles
- dark coloration of the oil

The flushing liquid should be the type of oil which is currently being used.

1. After the vacuum pump has been filled with fresh oil, allow it to warm up by running it with the suction port closed. If you have established that the old oil, which you have previously drained, was contaminated by condensate (e.g. water) then the gas ballast valve must be open.
2. Drain the flushing oil. If the oil still appears heavily contaminated, the flushing procedure must be repeated.

6.3.4 Frequency of Oil Changes

The oil change interval is completely dependent upon the running conditions of temperature, operating pressure, hours of daily operation, and upon the materials pumped. Clean, dry air at pressures below 0.7 mbar (50 mtorr) are the most forgiving conditions. To determine your own oil change interval, visually monitor the pump oil conditions at regular intervals. If you suspect harsh operating conditions, daily visual checks are recommended. When the oil becomes cloudy, dark or includes particles of solids, it is time to change the oil.

Be sure to use only DirectorrÊ Premium vacuum oil. The ultimate pressure guarantee applies only if this oil is used!

6.4 Shaft Seal Replacement

When the shaft seal in the mounting plate shows signs of excessive oil leakage, it should be replaced.
Before attempting replacement of the seal, the pump must be disconnected from the vacuum system and from the power outlet. A seal replacement kit is available. This kit contains the outer lip seal assembly and gasket, which can be replaced in the field. See chapter 10 ñOverview of Spare Partsò

6.5 Major Factory Repair

Repairs and maintenance going beyond the extent of the work described in the previous chapters or reconditioning or modification may only be performed by the manufacturer or authorized workshops.
Drain the oil before dispatching the pump and dispose of the oil according to the regulations.
The prerequisites for a handover are a complete and factually correct damage report, and a clean pump. Clean the pump aggregate and the pump casing after pumping media which are harmful to health and the environment. Fill up with sufficient oil to protect against corrosion during transport!

For more detailed information please visit our webpage: https://www.welchvacuum.com/service.html

If you should not have an entrance to the Internet, you can contact us via phone:

Europe: +49 3677 604 0
Americas: +1 847 676 8800
Asia: +86 21 5186 0238

⚠	**WARNING !**
Incomplete or incorrectly completed damage reports may endanger the service personnel! **Provide full information about contamination, and clean the pump thoroughly before handing it over to third parties. The user shall be liable for the consequences of an incorrect damage report or a contaminated pump. The statements in the damage report are legally binding.**	

7 Troubleshooting

Only manufacturing firm and authorized service workshops may work on the pump and their accessories during the warranty period.

Trouble	Cause	Remedy	
		by:	with:
Vacuum pump does not start	No power supply	Qualified electrician	Check electrical installation
	Motor defective	Service workshop	Exchange
	Coupling defective		Repair and/or exchange
	Starting temperature too low	User	Put vacuum pump in a warm place corresponding to the starting temperature
	Oil is resinous after too long storage	User or Service workshop	General maintenance / cleaning
Vacuum pump does not generate a vacuum	Ultimate pressure few mbar or atmospheric pressure, oil shortage	User	Top-up oil
	Oil is dirty		Operate with gas ballast, or perform oil change with flushing
	Oil supply to pump unit interrupted or reduced	User	Check that the oil circulation is functioning, measure the oil pressure at operating temperature, 1 - 1.2 bar overpressure, check that the pipes are clear and have no leaks
	Gas ballast valve open	User	Close the gas ballast valve
	Shaft seals defective	User or Service workshop	Exchange
	Work or pressure control valve defective		Exchange
	Intake valve defective		Repair
	Oil supply to pump aggregate reduced, Oil superimposition interrupted by work valve		Repair
	Built-up pressure in the oil casing too high because of exhaust gas pipe or oil mist filter	User or Service workshop	Check exhaust pipe, change filter insert
Vacuum pump runs very loudly	Motor, rotary vanes and/or shaft seal rings defective, rotary vane spring broken		Repair and/or exchange
Vacuum pump runs hot	Vacuum pump oil supply interrupted		Check that the oil circulation is functioning, measure the oil pressure at operating temperature, 1 - 1.2 bar overpressure, check that the pipes are clear and have no leaks
	Oil with too low a viscosity used		Oil change
	Ambient temperature round vacuum pump too high	User	Change location
	Motor defective	User or Service workshop	Exchange
	Built-up pressure in the oil casing too high (> 0.5 bar)		Check exhaust pipe, change filter insert
Heavy loss of oil	Through oil mist emission: work or pressure control valve defective		Exchange
	Because of leak from oil casing: shaft seal defective, oil casing seals defective		Repair and/or exchange
Vacuum pump is not vacuum-tight when switched off - possible rise in oil pressure	Intake valve defective		Repair and/or exchange
	Shaft seal ring on the drive side or oil pump defective		Repair and/or exchange
	Opened gas ballast valve	User	Close the gas ballast valve
Cable(s)	defective and/or brittle	Qualified electrician	Exchange of the cable(s)

8 Overview of Accessories

8.1 Overview and Order Numbers for EMEA, Asia

Type	Product name	Description	Order no.
Exhaust Filter	Oil Mist Separator AKD 25	DN 25 KF	320017
	Replacement element for AKD 25		800160
	Oil Mist Filter OME 10/25	DN 25 KF	700011
	Oil Mist Filter OME 25/30	DN 25 KF	700012
	Replacement element for OME 10/25		800160
	Activated Charcoal Filter with Cartridge AKF 10/25	DN 25 KF	700191
Trap	Cold Trap, welded DN 25 KF	DN 25 KF	705121
	Fine Vacuum Adsorption Trap, SOF 25	DN 25 KF	705180
	Replacement molecular sieve (1 l sorption agent) for SOF 25		800200
Inlet Condenser	Inlet Condenser AKS 25	DN 25 KF	320018
	Condenser SS, water cooling	SKS 40/25	700066
Tubing, Connector, Adapter	PVC Cord-Reinforced, Flexible Vacuum Hose	DN 25 KF, 25mm ID, 35mm length	710059
	Chemical resistant metal hose	DN 25 KF, 1,5m	710756
	Chemical resistant metal hose	DN 25 KF, 1m	710765
	Hose Adapter kit	DN 25 KF, 1,5m	330060
	Male Hose Adapter Al	DN 25 KF / 25mm I.D. for PVC Hose	710053
	Inlet Fitting Stainless Steel	DN 25 KF - DN 16	701703-01
	Inlet Fitting Stainless Steel	DN 25 KF - DN 20	701704
	Retrofit-Kit (Adapter) to use KF 16 for intake and exhaust	DN 25/16 KF	701401
	KF Tees, Stainless Steel	DN 25 KF	701501
Application Kits	Freeze Dryer Adapter-Kit 3 for Rotary vane pumps DN 25 KF	DN 25 KF	330032
	Vacuum Concentrator Adapter Kit DN 25 KF	DN 25 KF	330045
Vacuum Measurement	Vacuum Measurement Kit DN 25 KF	DN 25 KF	330052
	Vacuum Control Package	DN 25 KF	330054
	PIZA 111 cr Gold	90-260V, 50/60 Hz	600074
Service	Fastening Kit	For CRVpro 16	S3196-99
	Fastening Kit	For CRVpro 24	S3197-99
	Fastening Kit	For CRVpro 30	S3198-99
	Seal Kit	For CRVpro 16, 24, 30	S3192-99
	Lip Seal Kit	For CRVpro 16, 24, 30	S3199-99
	Service Kit	For CRVpro 16	S3193-99
	Service Kit	For CRVpro 24	S3194-99
	Service Kit	For CRVpro 30	S3195-99
Oil	DirectorrÊ Premium vacuum oil	1 liter	800995-01
	DirectorrÊ Premium vacuum oil	5 liter	800995-05
	DirectorrÊ Premium vacuum oil	10 liter	800995-10
	DirectorrÊ Premium vacuum oil	20 liter	800995-20
	DirectorrÊ Premium vacuum oil	200 liter	800995-200

8.2 Overview and Order Numbers for Americas

Type	Product name	Description	Order no.
Exhaust Filter	Oil Mist Separator AKD 25	DN 25 KF	320017
	Replacement element for AKD 25		800160
	Oil Mist Filter OME 10/25	DN 25 KF	700011
	Oil Mist Filter OME 25/30	DN 25 KF	700012
	Replacement element for OME 10/25		800160
	Activated Charcoal Filter with Cartridge AKF 10/16	DN 25 KF	700191
Trap	Acid Neutralization Trap	DN 25 KF	1420H-20
	Replacement Element for Acid Neutralization Trap	For 1420H-20	1420E-01
	Cold Trap, welded DN 25 KF	DN 25 KF	705121
	Fine Vacuum Adsorption Trap, SOF 25	DN 25 KF	705180
	Replacement molecular sieve (1 l sorption agent) for SOF 25		800200
Tubing, Connector, Adapter	Hose Adapter kit	DN 25 KF	330060
	Hose adapter kits- Interconnect kit / large oven	Pump OD 3/4 to 1/4" and 3/8"	1420H-02
	Hose Clamps for Thick Wall Vacuum Rubber Hose Pk/10	3/4" ID x 1-3/4" OD, 5 FT Length	331060-5
	Hose Clamps for Thick Wall Vacuum Rubber Hose Pk/10	3/4" ID x 1-3/4" OD, 10 FT Length	331060-10
	Hose Clamps for Thick Wall Vacuum Rubber Hose Pk/10	3/4" ID x 1-3/4" OD, 15 FT Length	331060-15
	Hose Clamps for Thick Wall Vacuum Rubber Hose Pk/10	3/4" ID x 1-3/4" OD, 20 FT Length	331060-20
	Hose Clamps for Thick Wall Vacuum Rubber Hose Pk/10		305360
	Hose Clamps for Thick Wall Vacuum Rubber Hose Pk/10	1 5/8" ID x 3" OD, 5 FT Length	331080-5
	Hose Clamps for Thick Wall Vacuum Rubber Hose Pk/10		305380
Adapter	Retrofit-Kit (Adapter) to use KF 16 for intake and exhaust	DN 25/16 KF	701401
Inlet Condenser	Inlet Condenser AKS 25	DN 25 KF	320018
	Condenser SS, water cooling	SKS 40/25	700066
Gauges	Hand Held Vacuum Gauge - Battery Operated	Millitorr Range 10^{-3} to 1 torr	1526K-10
	Spare sensor for Hand Held Vacuum Gauge		1526A
Service	Fastening Kit	For CRVpro 16	S3196-99
	Fastening Kit	For CRVpro 24	S3197-99
	Fastening Kit	For CRVpro 30	S3198-99
	Seal Kit	For CRVpro 16, 24, 30	S3192-99
	Lip Seal Kit	For CRVpro 16, 24, 30	S3199-99
	Service Kit	For CRVpro 16	S3193-99
	Service Kit	For CRVpro 24	S3194-99
	Service Kit	For CRVpro 30	S3195-99
Oil	DirectorrÊ Premium vacuum oil	1 quart	8995P-11
	DirectorrÊ Premium vacuum oil	1 gallon	8995P-15
	DirectorrÊ Premium vacuum oil	5 gallon	8995P-20
	DirectorrÊ Premium vacuum oil	55 gallon	8995P-25

8.3 Inlet Condensor AKS 25

Technical Data	Order no.	320018
	Connecting flange	DN 25 KF
	Separator ï basic body	Aluminium
	Collector or condensate vessel	Borosilicate glass
	Seals	FKM
	Max. filling volume	380 ml
	Order no. Beaker glass AKS	828835
	Order no. AKS	320018
Area of Application	The suction-side separator AKS prevents condensates from the vacuum systems penetrating into the rotary vane pump. The horizontal arrangement of the separator alongside the pump prevents fluids running back from the collector or condensate vessel into the pump.	
Maintenance	Maintenance of the suction-side separator AKS is limited to simply emptying the collecting vessel.	
Assembly - AKS at rotary vane pump:	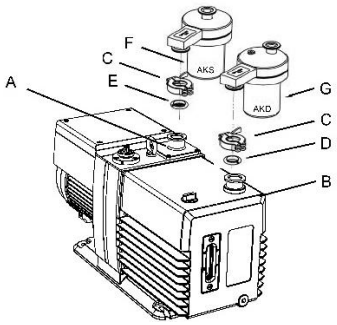	The suction-side separator **(F)** is flanged using a normal clamping ring **(C)**, a centering ring with wire fabric and an O-ring **(E)** are directly flange-mounted onto the suction port **(A)** of the Rotary vane pump. (connecting elements in DN 25 KF - see data for ordering - below)

Order data for compound elements DN25KF:

for separator:	Designation	Piece	Order no.
AKS 25, AKD 25 (DN 25 KF)	KF Normal clamping ring Aluminium DN 20/25	1	701023
	KF Centering ring Aluminium with FKM-O-ring DN 25	1	701093
	KF Centering ring with fine filter Stainless steel with FKM-O-ring DN 25	1	701193

8.4 Oil Mist Separator AKD 25

Technical Data	Order no.	320017
	Connecting flange	DN 25 KF
	Separator ï basic body	Aluminium
	Collector vessel	Borosilicate glass
	Seals	FKM
	Max. filling volume	270 ml
	Filter cartridge	Optical fiber
	Order no. Spare-filter cartridge	800160
	Order no. Beaker glass AKD	828835
	Order no. AKD	320017
Area of Application	The pressure-side separator AKD effectively reduces the oil mist emission from the rotary vane pump's pressure port at high intake pressures.The horizontal arrangement of the separator alongside the pump prevents fluids running back from the collector or condensate vessel into the pump.	
Maintenance	Maintenance of the pressure-side separator AKD is limited to simply emptying the collecting vessel and changing the saturated filter cartridge.	
Assembly - AKD at Rotary vane pump:	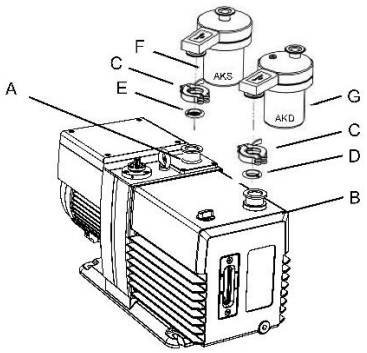	The pressure-side separator **(G)** is flanged directly to the pressure port **(B)** of the rotary vane pump, using a normal clamping ring **(C)** and a centering ring with an O-ring **(D)**. Connecting elements in DN 25 KF - see chapter 8.3 Inlet Condensor AKS 25.

8.5 Sorption trap SOF

Mode of action	The gas flows from the recipient via the gas inlet into the sorption trap, passes by the sorption agent, and reaches the outer cylinder to the gas outlet which is connected to the pump. The oil particles fly against the flow direction out of the pump and into the outer cylinder of the sorption trap. This provides the first of opportunity for precipitation against the wall of the cylinder. After this, the oil particles fly past the sorption agent which presents a very high affinity to hydrocarbons. The particles will be attracted and bound by the sorption agent. This leads to a reduction by approximately 3 powers in the partial pressure of the hydrocarbons having a mass number of 40 or higher as compared to operation without a sorption trap.
Assembly ï SOF at Rotary vane pump	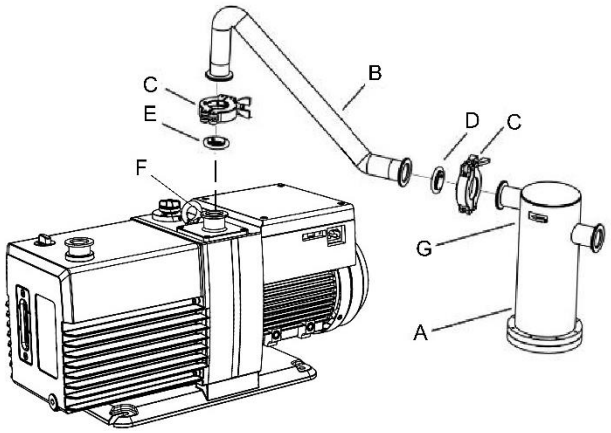

	The connecting direction is indicated by an arrow **(G)** on the sorption trap. The rotary vane pump and the sorption trap **(A)** are located next to each other on an even surface. Initially fasten the sorption trap **(A)** to the metal hose **(B)** using the centering ring with an O-ring **(D)** and the normal clamping ring **(C)**. For connection to the suction port **(F)** of the rotary vane pump, use the centering ring with wire fabric and O-ring **(E)** available at the pump, and the normal clamping ring **(C)**. Connecting elements in DN 25 KF - see chapter 8.3 Inlet Condensor AKS 25.
Change of the sorption agent (molecular sieve)	When the sorption agent (molecular sieve) **(1)** is saturated, it is to be replaced. Turn the sorption trap upside down and unscrew **(8)** the bottom flange **(7)** to change the sorption agent. Now the clamping cover **(3)** is visible and must also be removed. Drain the sorption agent from the trap and clean it. Fill in new sorption agent and close the sorption trap in reverse order. The sorption trap is ready for use again.

Spare parts				
Figure Sectional view	**No.**	**Designation**	**Qty.**	**Order no.**
				SOF 25
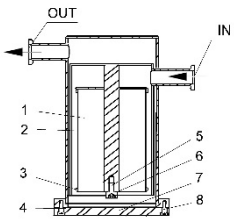	**1**	Molecular sieve (sorption agent 1l)	1	800200
	2	Wire mesh	1	705549
	3	Clamping cover	1	705548-06
	4	O-ring FKM, 84x3	1	829290
	5	Screw A2, M6x14	1	822419-1
	6	U-Washer A2, 6.4x12.5x1.6	1	824636
	7	Bottom flange	1	705550
	8	Screw A2, M4x14	8	822476
	IN	Gas inlet		
	OUT	Gas outlet		

Order data for compound elements DN25KF:

for sorption trap:	Designation	Qty.	Order no.
SOF 25 (DN 25 KF)	KF Metal tube DN 25 annealed, 250 mm long	1	710759
	KF Normal clamping ring Aluminium DN 20/25	2	701023
	KF Centering ring Aluminium with FKM-o-ring DN 25	1	701093
	KF Centering ring with fine filter Stainless steel with FKM-o-ring DN 25	1	701193

9 Overview of Spare Parts

The overview of spare parts contain all service kits, single spare parts with all the information necessary for ordering. When ordering please quote the order number, description and quantity!

⚠	**CAUTION !**
We are not liable for any damage caused by the installation of any parts not supplied by the manufacturer.	

9.1 Fastening Kit

The fastening kit contains all the fasten parts which could be replaced during a preventive maintenance or repair.

- For the rotary vane pumps CRVpro 16: Order no. S3196-99
- For the rotary vane pumps CRVpro 24: Order no. S3197-99
- For the rotary vane pumps CRVpro 30: Order no. S3198-99

Item no.	Description	Qty	CRVpro 16	CRVpro 24	CRVpro 30
	Consisting of :		Order no.	Order no.	Order no.
2	Screw	4	S3088-99	S3088-99	S3088-99
3,102	Elastic Washer	9	S3087-99	S3087-99	S3087-99
7	Screw	1	S3177-99	S3177-99	S3177-99
10	Screw	4	S3178-99	S3178-99	S3178-99
15	Elastic Washer	4	S3179-99	S3179-99	S3179-99
16	Screw	4	S3083-99	S3083-99	S3083-99
24	Screw	3	S3089-99	S3089-99	S3089-99
26	Elastic Washer	1	S3092-99	S3092-99	S3092-99
27	Screw	1	S3093-99	S3093-99	S3093-99
37	Screw	4	S3094-99	S3094-99	S3094-99
43	Screw	1	S3180-99	S3180-99	S3180-99
44	Elastic Washer	1	S3108-99	S3108-99	S3108-99
45	Washer	1	S3129-99	S3129-99	S3129-99
49	Screw	3	S3100-99	S3100-99	S3100-99
50	Elastic Washer	3	S3101-99	S3101-99	S3101-99
66	Screw	2	S3107-99	S3107-99	S3107-99
70,79	Screw	3	S3110-99	S3110-99	S3110-99
71,80	Elastic Washer	3	S3108-99	S3108-99	S3108-99
84	Screw	4	S3181-99	S3182-99	S3183-99
85	Flat Washer	4	S3115-99	S3115-99	S3115-99
86	Elastic Washer	4	S3114-99	S3114-99	S3114-99
87	Nut	4	S3200-99	S3200-99	S3200-99
98	Screw	2	S3117-99	S3117-99	S3117-99
101	Screw	5	S3088-99	S3088-99	S3088-99
103	Flat Washer	5	S3184-99	S3184-99	S3184-99

9.2 Seal Kit

The seal kit contains all the seals which must be exchanged during a preventive maintenance or repair.

- For the rotary vane pumps CRVpro 16, 24, 30 Order no. S3192-99

Item no.	Description	CRVpro 16,24,30: S3192-99	
	Consisting of :	Qty.	Order no.
18	O-Ring	1	S3156-99
31	O-Ring	1	S3172-99
32	Oil Seal	1	S3019-99
35	O-Ring	1	S3171-99
39	O-Ring	2	S3168-99
52	Oil Seal	1	S3176-99
53	O-Ring	1	S3170-99
55	O-Ring	1	S3169-99
59	Gasket	1	S3155-99
61	Oil Seal	1	S3173-99
91	Washer	1	S3149-99
93	O-Ring	1	S3185-99
95	O-Ring	1	S3143-99
100	O-Ring	1	S3063-99

9.3 Lip Seal Kit

Additionally the lip seal kit is available during a preventive maintenance or repair.

- For the rotary vane pumps CRVpro 16, 24, 30 Order no. S3199-99

Item no.	Description	CRVpro 16,24,30: S3197-99	
	Consisting of :	Qty.	Order no.
49	Screw	3	S3100-99
50	Elastic Washer	3	S3101-99
51	Pump Cover	1	S3131-99
52	Oil Seal	1	S3176-99
53	O-Ring	1	S3170-99
54	Washer	1	S3154-99
55	O-Ring	1	S3169-99

9.4 Oil Drain Valve Kit

The oil drain valve kit makes the maintenance of draining the oil easier. Details about draining the oil see 6.3.1.

- For the Rotary vane pumps CRVpro 16,24,30 Order no. S3222-99

Item no.	Description	CRVpro 16,24,30: S3222-99	
	Consisting of :	Qty.	Order no.
-	Oil Drain Valve BSP 3/8ò	1	S3220-99
-	M16 to BSP 3/8òAdapter	1	S3221-99

9.5 Service Kit

The service kit contains, in addition to the seals, all the spare parts which are subject to high wear and tear and therefore have to be replaced.

- For the rotary vane pump CRVpro 16: Order no. S3193-99
- For the rotary vane pump CRVpro 24: Order no. S3194-99
- For the rotary vane pump CRVpro 30: Order no. S3195-99

Item no.	Description	Qty	CRVpro 16	CRVpro 24	CRVpro 30
	Consisting of :		Order no.	Order no.	Order no.
4	Paper Washer	1	S3159-99	S3159-99	S3159-99
18	O-Ring	1	S3156-99	S3156-99	S3156-99
29	Anti-Such Back Spring	1	S3166-99	S3166-99	S3166-99
31	O-Ring	1	S3172-99	S3172-99	S3172-99
32	Oil Seal	1	S3019-99	S3019-99	S3019-99
34	Anti-Suck Back Plate	1	S3021-99	S3021-99	S3021-99
35	O-Ring	1	S3171-99	S3171-99	S3171-99
39	O-Ring	2	S3168-99	S3168-99	S3168-99
46	Coupling Element	1	S3128-99	S3128-99	S3128-99
52	Oil Seal	1	S3176-99	S3176-99	S3176-99
53	O-Ring	1	S3170-99	S3170-99	S3170-99
55	O-Ring	1	S3169-99	S3169-99	S3169-99
59	Gasket	1	S3155-99	S3155-99	S3155-99
61	Oil Seal	1	S3173-99	S3173-99	S3173-99
63	Fore Vane	2	S3136-99	S3187-99	S3186-99
65	Vane Spring	6	S3039-99	S3039-99	S3039-99
73	Exhaust Valve Plate	1	S3146-99	S3146-99	S3146-99
75	Spring	1	S3044-99	S3044-99	S3044-99
76	Gas Ballast Valve Head	1	S3045-99	S3045-99	S3045-99
78	Rear Vane	2	S3142-99	S3142-99	S3142-99
91	Washer	1	S3149-99	S3149-99	S3149-99
93	O-Ring	1	S3018-99	S3018-99	S3018-99
95	O-Ring	1	S3143-99	S3143-99	S3143-99
96	Glass	1	S3144-99	S3144-99	S3144-99
100	O-Ring	1	S3063-99	S3063-99	S3063-99

9.6 List of Spare Parts

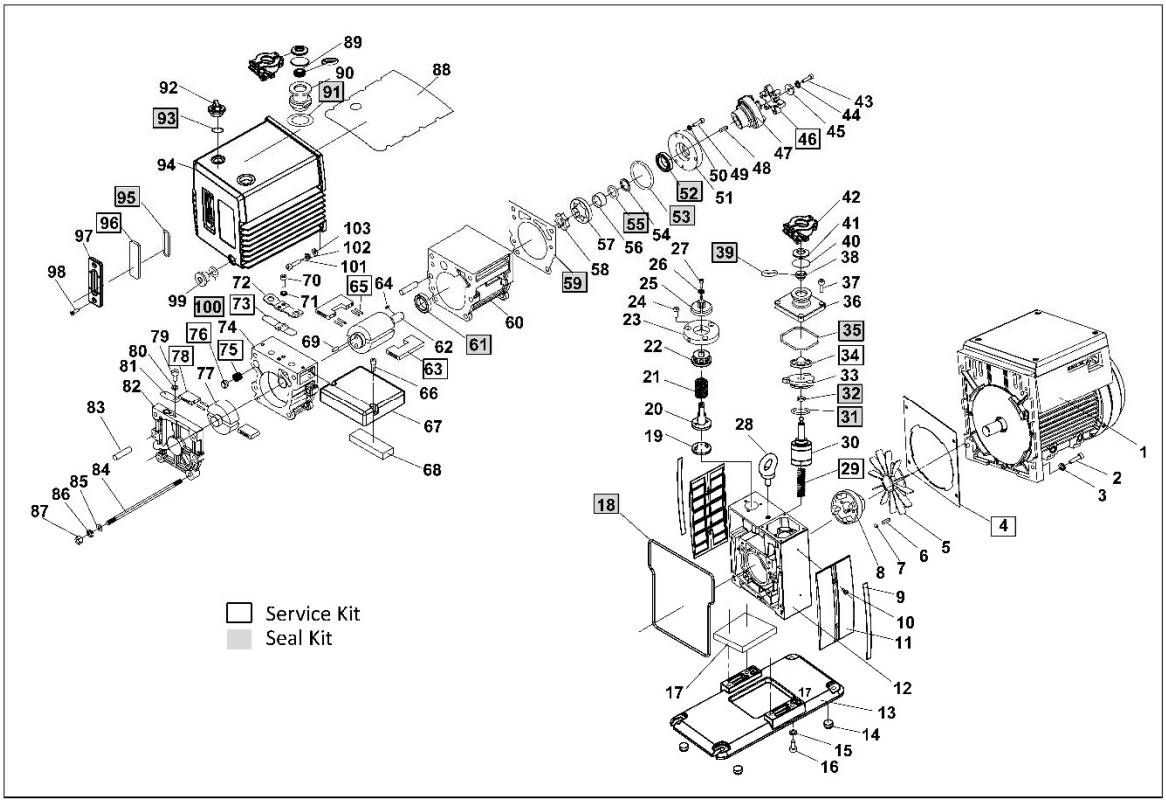

Fig. 10 Exploded view CRVpro 16, CRVpro 24, CRVpro 30

Item no.	Description	Qty	CRVpro 16	CRVpro 24	CRVpro 30
			Order no.	Order no.	Order no.
1	Motor-115V version	1	S3201-99	S3201-99	S3201-99
1	Motor-230V version	1	S3202-99	S3202-99	S3202-99
4	Paper Washer	1	S3159-99	S3159-99	S3159-99
5	Pump Fan	1	S3123-99	S3123-99	S3123-99
6	Flat Key	1	S3206-99	S3206-99	S3206-99
8	Coupling	1	S3127-99	S3127-99	S3127-99
9	Red Strip	2	S3126-99	S3126-99	S3126-99
11	Side Overlay	2	S3125-99	S3125-99	S3125-99
12	Trestle	1	S3124-99	S3124-99	S3124-99
13	Base	1	S3122-99	S3122-99	S3122-99
14	Foot Pad	4	S3008-99	S3008-99	S3008-99
17	Felt	1	S3207-99	S3207-99	S3207-99
18	O-Ring	1	S3156-99	S3156-99	S3156-99
19	Gas Ballast Valve Bush	1	S3160-99	S3160-99	S3160-99
20	Gas Ballast Valve Rod	1	S3161-99	S3161-99	S3161-99
21	Gas Ballast Spring	1	S3162-99	S3162-99	S3162-99
22	Gas Ballast Location Bush	1	S3163-99	S3163-99	S3163-99
23	Gas Ballast Valve Ring	1	S3014-99	S3014-99	S3014-99
25	Gas Ballast Knob	1	S3015-99	S3015-99	S3015-99
28	Ring	1	S3208-99	S3208-99	S3208-99
29	Anti-Suck Back Spring	1	S3166-99	S3166-99	S3166-99
30	Anti-Suck Back Piston	1	S3165-99	S3165-99	S3165-99
31	O-Ring	1	S3172-99	S3172-99	S3172-99
32	Oil Seal	1	S3019-99	S3019-99	S3019-99
33	Anti-Suck Back Cover	1	S3164-99	S3164-99	S3164-99

Overview of Spare Parts

Item no.	Description	Qty	CRVpro 16	CRVpro 24	CRVpro 30
			Order no.	Order no.	Order no.
34	Anti-Suck Back Plate	1	S3021-99	S3021-99	S3021-99
35	O-Ring	1	S3171-99	S3171-99	S3171-99
36	Inlet Port	1	S3158-99	S3158-99	S3158-99
38	Filter	1	S3157-99	S3157-99	S3157-99
39	O-Ring	2	S3168-99	S3168-99	S3168-99
40	Rubber Sheet	2	S3209-99	S3209-99	S3209-99
41	Blank Flange	2	S3151-99	S3151-99	S3151-99
42	Hoop	2	S3174-99	S3174-99	S3174-99
46	Coupling Element	1	S3128-99	S3128-99	S3128-99
47	Coupling	1	S3130-99	S3130-99	S3130-99
48	Flat Key	1	S3210-99	S3210-99	S3210-99
51	Pump Cover	1	S3131-99	S3131-99	S3131-99
52	Oil seal	1	S3176-99	S3176-99	S3176-99
53	O-ring	1	S3170-99	S3170-99	S3170-99
54	Washer	1	S3154-99	S3154-99	S3154-99
55	O-ring	1	S3169-99	S3169-99	S3169-99
56	Bush	1	S3153-99	S3153-99	S3153-99
57	Oil Pump Rotor (out)	1	S3132-99	S3132-99	S3132-99
58	Oil Pump Rotor (in)	1	S3133-99	S3133-99	S3133-99
59	Gasket	1	S3155-99	S3155-99	S3155-99
60	Fore Stator	1	S3134-99	S3188-99	S3190-99
61	Oil Seal	1	S3173-99	S3173-99	S3173-99
62	Fore rotor	1	S3135-99	S3189-99	S3191-99
63	Fore Vane	2	S3136-99	S3187-99	S3186-99
64	Flat Key	1	S3106-99	S3106-99	S3106-99
65	Spring	6	S3039-99	S3039-99	S3039-99
67	Oil cover	1	S3148-99	S3148-99	S3148-99
68	Filter	1	S3109-99	S3109-99	S3109-99
69	Pin	2	S3211-99	S3211-99	S3211-99
72	Limiting Plate	1	S3147-99	S3147-99	S3147-99
73	Exhaust Valve Plate	1	S3146-99	S3146-99	S3146-99
74	Rear Stator	1	S3137-99	S3137-99	S3137-99
75	Spring	1	S3044-99	S3044-99	S3044-99
76	Gas Ballast Valve Head	1	S3045-99	S3045-99	S3045-99
77	Rear Rotor	1	S3141-99	S3141-99	S3141-99
78	Rear Vane	2	S3142-99	S3142-99	S3142-99
81	Oil Pump Valve	1	S3049-99	S3049-99	S3049-99
82	Rear Cover	1	S3138-99	S3138-99	S3138-99
83	Pin	4	S3212-99	S3212-99	S3212-99
88	Oil Plate	1	S3152-99	S3152-99	S3152-99
89	Centre Rest	1	S3175-99	S3175-99	S3175-99
90	Exhaust Port	1	S3150-99	S3150-99	S3150-99
91	Washer	1	S3149-99	S3149-99	S3149-99
92	Oil Fill Plug	1	S3056-99	S3056-99	S3056-99
93	O-Ring	1	S3018-99	S3018-99	S3018-99
94	Oil Case	1	S3140-99	S3140-99	S3140-99
95	O-Ring	1	S3143-99	S3143-99	S3143-99
96	Glass	1	S3144-99	S3144-99	S3144-99
97	Oil Window	1	S3145-99	S3145-99	S3145-99
99	Oil Drain Plug	1	S3062-99	S3062-99	S3062-99
100	O-Ring	1	S3063-99	S3063-99	S3063-99

10 EC Declaration

Gardner Denver Thomas
Pneumatic System Co., Ltd.
No. 1 Dong An Road
Shuo Fang Town
Wuxi New District, Jiangsu
PC 214142 China

Appliance description:	Rotary Vane pump
Document-No.:	CRVpro16,24,30-88-00
Series:	CRVpro 16, CRVpro 24, CRVpro 30

EC-declaration of conformity according to Machinery Directive
We hereby declare, that the appliance described above, based on it's concept and design as well as the models distributed by us meets the basic safety and health standards of the directive 2006/42/EC.

Applied harmonized standards:
EN 60204-1: 2006+A1:2009 EN 1012-2:1996+A1:2009

EC-declaration of conformity according to EMC Directive
The component described above is inherently benign in terms of electromagnetic compatibility and is thereby excluded from the scope of the directive 2014/30/EU according to article 2(2)d).

EC-declaration of conformity according to Directive RoHS
We hereby declare, that the appliance described above is in conformity with directive 2011/65/EU.
EN 50581:2012

Notice:
All modifications to this product results in cancellation of this declaration.

Person, who is empowered to draw up this declaration on behalf of the manufacturer:

Name: Loki Shi
Title: Manager Engineering Service
CE-authorized representative

Wuxi 2017/8/2 Loki Shi
Place/Date/Signature

Authorized representative established in the European Community and person, who is authorized to compile the technical file:
Gardner Denver Thomas GmbH
Livry-Gargan-Str. 10
82256 Fürstenfeldbruck/Germany

11 Global Contact

EMEA
Gardner Denver Thomas GmbH
Am Vogelherd 20
98693 Ilmenau
Germany
Phone: +49 3677 604-0
Fax: +49 3677 604-131
E-Mail: welch.emea@gardnerdenver.com
www.welchvacuum.de

America
Gardner Denver Thomas Inc.
1601 Feehanville Drive
Suite 550
Mt. Prospect, IL 60056
USA
Phone: +1 847 676-8800
Fax: +1 847 677-8606
E-Mail: welch.na@gardnerdenver.com
www.welchvacuum.com

Asia Pacific
Gardner Denver
Room 2206, Qiangsheng Mansion
No. 145 Pujian Road
200127 Shanghai
China
Phone: +86 21 51860238
Fax: +86 21 50396221
E-Mail: welch.as@gardnerdenver.com
www.welchvacuum.com

Global Headquarters
Gardner Denver Thomas GmbH
Livry-Gargan-Str. 10
82256 Fürstenfeldbruck
Germany