WATSON-MARLOW MANUALS

m-120coversheet U-114DV-gb-02 Original instructions

# Watson-Marlow 120 cased pumps 120U/DV

## Contents


1 General information
2 Operating manual
3 114DV pumphead

WATSON-MARLOW MANUALS

m-120general-gb-01 Original instructions

# Watson-Marlow 120 cased pumps Section 1 of 3: general information

## Contents


1.1 Declaration of conformity 2
1.2 Declaration of incorporation 2
1.3 Three-year warranty 2
1.4 When you unpack your pump 3
1.5 Information for returning pumps 3
1.6 Peristaltic pumps - an overview 4
1.7 Safety notes and standards 5
1.8 Good pump installation practice 7
1.8.1 General recommendations 7
1.8.2 Do's and do not's 8
1.9 Power supply 9
1.10 Dimensions 10
1.11 Start-up check list 11
1.12 Drive maintenance 11
1.13 Drive spares 11
1.14 Decontamination certificate 12

# 1.1 Declaration of conformity

This declaration was issued for Watson-Marlow 120 pumps on April 28, 2010. When this pump unit is used as a stand-alone pump it complies with: Machinery Directive 2006/42/EC, EMC Directive 2004/108/EC.

This pump is ETL listed: ETL control number 3050250. Cert to CAN/CSA std C22.2 No 61010-1. Conforms to UL 61010-1.

# 1.2 Declaration of incorporation

When this pump unit is to be installed into a machine or is to be assembled with other machines for installations, it must not be put into service until the relevant machinery has been declared in conformity with the Machinery Directive 2006/42/EC.

Responsible person: David Cole, Managing Director, Watson-Marlow Limited, Falmouth, Cornwall TR11 4RU, England. Telephone +44 (0) 1326 370370 Fax +44 (0) 1326 376009.

The information in this user guide is believed to be correct at the time of publication. However, Watson-Marlow Limited accepts no liability for errors or omissions. Watson-Marlow has a policy of continuous product improvement, and reserves the right to alter specifications without notice. This manual is intended for use only with the pump it was issued with. Earlier or later models may differ. The most up-to-date manuals appear on the Watson-Marlow website:
http://www.wmpg.com

# 1.3 Three-year warranty

Watson-Marlow Limited ("Watson-Marlow") warrants, subject to the conditions and exceptions below, through either Watson-Marlow, its subsidiaries, or its authorised distributors, to repair or replace free of charge, any part of the pump drive which fails within three years of the day of manufacture of the product. Such failure must have occurred because of defect in material or workmanship and not as a result of operation of the product other than in normal operation as defined in this pump manual.

Watson-Marlow shall not be liable for any loss, damage, or expense directly or indirectly related to or arising out of the use of its products, including damage or injury caused to other products, machinery, buildings, or property, and Watson-Marlow shall not be liable for consequential damages, including, without limitation, lost profits, loss of time, inconvenience, loss of product being pumped, and loss of production. This warranty does not obligate Watson-Marlow to bear any costs of removal, installation, transportation, or other charges which may arise in connection with a warranty claim.

Conditions of and specific exceptions to the above warranty are:

**Conditions**

- Products must be returned by pre-arrangement, carriage-paid, to Watson-Marlow, or a Watson-Marlow approved service centre.
- All repairs or modifications must have been made by Watson-Marlow Limited, or a Watson-Marlow approved service centre or with the express permission of Watson-Marlow.
- Warranties purporting to be on behalf of Watson-Marlow made by any person, including representatives of Watson-Marlow, its subsidiaries, or its distributors, which do not accord with the terms of this warranty shall not be binding upon Watson-Marlow unless expressly approved in writing by a Director or Manager of Watson-Marlow.

### Exceptions

- The warranty shall not apply to repairs or service necessitated by normal wear and tear or for lack of reasonable and proper maintenance.
- Tubing, a consumable item, is excluded.
- Products which, in the judgment of Watson-Marlow, have been abused, misused, or subjected to malicious or accidental damage or neglect are excluded.
- The 120F is excluded from all warranty when pumping above 1 bar. The 120U and the 120S are excluded from all warranty when pumping above 2 bar.
- Electrical surge as a cause of failure is excluded.
- Chemical attack is excluded
- All pumphead rollers are excluded.
- Ancillaries are excluded.

Pumpheads used with this pump drive carry their own warranty.

## 1.4 When you unpack your pump

Unpack all parts carefully, retaining the packaging until you are sure all components are present and in good order. Check against the components supplied list.

### Packaging disposal

Dispose of packaging materials safely, and in accordance with regulations in your area. The outer carton is made of corrugated cardboard and can be recycled.

### Inspection

Check that all components are present. Inspect components for damage in transit. If anything is missing or damaged, contact your distributor immediately.

### Components supplied

- Dedicated 120F, 120S or 120U pump drive fitted with a 114DV pumphead, 102R pumphead, 400D1, 400DM2 or 400DM3 pumphead
- The designated external DC power supply unit for your pump with plug adaptors
- PC-readable CDROM containing these operating instructions
- Quick Start printed manual

**Note**: Some versions of this product will include components different from those listed above. Check against your purchase order.

### Storage

This product has an extended shelf life. However, care should be taken after storage to ensure that all parts function correctly. Long-term storage is not recommended for peristaltic pump tubing. Please observe the storage recommendations and use-by dates which apply to tubing you may wish to bring into service after storage.

## 1.5 Information for returning pumps

If you wish to return a pump for service or other reasons, contact Watson-Marlow or your distributor, quote your pump's serial number, and ask for a returns number. Include this number when you ship the pump.

Equipment which has been contaminated with, or exposed to, body fluids, toxic chemicals or any other substance hazardous to health must be decontaminated before it is returned to Watson-Marlow or its distributor.

A certificate included at the rear of these operating instructions, or signed statement, must be attached to the outside of the shipping carton. This certificate is required even if the pump is unused. See 1.14 *Decontamination certificate*.

If the pump has been used, the fluids that have been in contact with the pump and the cleaning procedure must be specified along with a statement that the equipment has been decontaminated.

# 1.6 Peristaltic pumps - an overview

Peristaltic pumps are the simplest possible pump, with no valves, seals or glands to clog or corrode. The fluid contacts only the bore of a tube, eliminating the risk of the pump contaminating the fluid, or the fluid contaminating the pump. Peristaltic pumps can operate dry without risk.

## How they work

A compressible tube is squeezed between a roller and a track on an arc of a circle, creating a seal at the point of contact. As the roller advances along the tube, the seal also advances. After the roller has passed, the tube returns to its original shape, creating a partial vacuum which is filled by fluid drawn from the inlet port.

Before the roller reaches the end of the track, a second roller compresses the tube at the start of the track, isolating a packet of fluid between the compression points. As the first roller leaves the track, the second continues to advance, expelling the packet of fluid through the pump's discharge port. At the same time, a new partial vacuum is created behind the second roller into which more fluid is drawn from the inlet port.

Backflow and siphoning do not occur, and the pump effectively seals the tube when it is inactive. No valves are needed.

The principle may be demonstrated by squeezing a soft tube between thumb and finger and sliding it along: fluid is expelled from one end of the tube while more is drawn in at the other.

## Suitable applications

Peristaltic pumping is ideal for most fluids, including viscous, shear-sensitive, corrosive and abrasive fluids, and those containing suspended solids. They are especially useful for pumping operations where hygiene is important.

Peristaltic pumps operate on the positive displacement principle. They are particularly suitable for metering, dosing and dispensing applications. Pumps are easy to install, simple to operate and inexpensive to maintain.

# 1.7 Safety notes and standards

In the interests of safety, this pump and the tubing selected should only be used by competent, suitably trained personnel after they have read and understood this manual, and considered any hazard involved. If the pump is used in a manner not specified by Watson-Marlow Ltd, the protection provided by the pump may be impaired.

Any person who is involved in the installation or maintenance of this equipment should be fully competent to carry out the work. In the UK this person should also be familiar with the Health and Safety at Work Act 1974.

**There are moving parts inside the pumphead. Before opening the pumphead guard or track, ensure that the following safety directions are followed:**

- Ensure that the pump is isolated from the mains power.
- Ensure that there is no pressure in the pipeline.
- If a tube failure has occurred, ensure that any fluid in the pumphead has been allowed to drain to a suitable vessel, container or drain.
- Ensure that protective clothing and eye protection are worn if non-flammable hazardous fluids are pumped.
- Primary operator protection from rotating parts of the pump is provided by the pumphead safeguard. Note that safeguards differ, depending on the type of pumphead. See the *pumphead* section of this manual.

This pump must be used only for its intended purpose.

The pump must be accessible at all times to facilitate operation and maintenance. Access points must not be obstructed or blocked. Do not fit any devices to the drive unit other than those tested and approved by Watson-Marlow. Doing so could lead to injury to persons or damage to property for which no liability can be accepted.

**This symbol, used on the pump and in this manual, means: Caution, refer to accompanying documents.**

**This symbol, used on the pump and in this manual, means: Do not allow fingers to contact moving parts.**

**Fundamental work with regard to transportation, installation, starting-up, maintenance and repair should be performed by qualified personnel only. The unit must be isolated from mains power while work is being carried out. The motor must be secured against accidental start-up.**

**This product does not comply with the ATEX directive and must not be used in explosive atmospheres.**

If hazardous fluids are to be pumped, safety procedures specific to the particular fluid and application must be put in place to protect against injury to persons.

The exterior surfaces of the pump may get warm during operation. Do not take hold of the pump while it is running.

The exterior surfaces of the external DC power supply may get warm during operation. To be safe, let it cool after use before handling it.

For safety, the pump must not be run without a pumphead fitted.

### Electrical safety

The power supply is Class II insulated: double insulated with no earth connection.

The pump is Class III: safety extra-low voltage (SELV).

Installation category (over-voltage category): II

### Pump standards

| | |
|---|---|
| **EC harmonised standards** | Safety of machinery—electrical equipment of machines: BS EN 60204-1 |
| | Safety requirements for electrical equipment for measurement, control and laboratory use: IEC/EN/UL 61010-1 incorporating A2 Category 2, Pollution degree 2 |
| | Degrees of protection provided by enclosures (IP code): BS EN 60529 amendments 1 and 2 |
| | Conducted emissions: BS EN 55011 A1 and A2 Class A, called by BS EN61000-6-4 |
| | Radiated emissions: BS EN 55011 A1 and A2 Class A, called by BS EN61000-6-4 |
| | Electrostatic discharge: BS EN 61000-4-2 Criteria C |
| | Radiated RF immunity: BS EN 61000-4-3 A1 and A2, called by BS EN 61000-6-2 |
| | Fast transient burst: BS EN 61000-4-4 A1 and A2, Level 3 (2kV), called by BS EN 61000-6-2 |
| | Surge immunity: BS EN 61000-4-5 A1 and A2, called by BS EN 61000-6-2 |
| | Conducted RF immunity: BS EN 61000-4-6, called by BS EN 61000-6-2 |
| | Pumps and pump units for liquids—common safety requirements: BS EN 809 |
| **Other standards** | CAN/CSA-C22.2 No 61010-1 |
| | Conducted emissions FCC 47CFR, Part 15.107 |
| | Radiated emissions FCC 47CFR, Part 15 |

### Power supply standards

| | |
|---|---|
| **Safety standards** | UL 60950-1<br>CSA-C22.2<br>TUV EN 60950-1 |
| **EMC** | EN 55022 Class B, FCC part 15/CIS PR 22 Class B<br>EN 61000-3-2, 3<br>EN61000-4-2, 3, 4, 5, 6, 8 and 11 Criteria A |

### Power supply specifications

| | |
|---|---|
| **Insulation category** | Class II: double insulated, no earth |
| **Mains voltage/frequency** | 90-264VAC, 47-63Hz, 1ph |
| **Mains current** | 0.7A @ 100VAC; 0.4A @ 230VAC |
| **Output voltage** | 24VDC |
| **Output power** | 24W @ 30C; 18W @ 40C |
| **Protection** | Hiccup mode: recovers automatically after fault removed |
| **Overload protection** | 110%-200% of rated output power |
| **Working temperature** | -10C to 50C, 14F to 122F |
| **Operating humidity** | 20% to 90% RH, non-condensing |
| **Over-voltage** | 115% to 135% |

**Note**: Pump specifications are included in Section 2 of these instructions.

# 1.8 Good pump installation practice

## 1.8.1 General recommendations

### Position

The 120 pump must be mounted in the upright position and not inverted or placed on its rear face.

A correctly engineered installation will promote long tube life. Site the pump on a flat, horizontal, rigid surface, free from excessive vibration, to ensure correct lubrication of the gearbox. Allow a flow of air around the pump to ensure that heat can be dissipated. Ensure that the temperature around the pump does not exceed 40C.

It is possible to stack only one other 120 pump on top of this pump. The case's third row of feet ensure ventilation between pumps and allow the top pump to be set back a little to give clear access to the lower pump's keypad. You can place other equipment on the pump's upper surface as long as the ambient temperature does not exceed 40C.

### Emergency disconnection

The pump's external DC power supply is the disconnecting device, which must be readily identifiable and easily reached, for isolating the motor drive from the mains supply. **Note**: There may be a slight delay after isolating the pump before the pump stops.

### Valves

Peristaltic pumps are self-priming and self-sealing against backflow. No valves are required in inlet or discharge lines. Valves in the process flow must be opened before the pump operates. Users are advised to fit a pressure relief device between the pump and any valve on the discharge side of the pump to protect against damage caused by accidental operation with the discharge valve closed.

### Pressure advice

In most circumstances, rotor and tube life are maximised if the pumphead is run slowly, particularly when pumping at high pressure. Do not exceed the pressures shown here.

| 120 pump RMS pressure ratings | |
|---|---|
| **120F + any pumphead** | 0 bar |
| **120S+102R<br>120S+400DM2<br>120S+400DM3<br>120U+114DV<br>120U+400D1<br>120U+400DM2<br>120U+400DM3** | 2 bar |

## 1.8.2 Do's and do not's

**Do not** build a pump into a tight location without adequate airflow around the pump.

**Do not** strap together the control and and external DC power supply cables.

**Do** keep delivery and suction tubes as short and direct as possible - though ideally not shorter than 1m - and follow the straightest route. Use bends of large radius: at least four times the tubing diameter. Ensure that connecting pipework and fittings are suitably rated to handle the predicted pipeline pressure. Avoid pipe reducers and lengths of smaller bore tubing than the pumphead section, particularly in pipelines on the suction side. Any valves in the pipeline (not usually needed) must not restrict the flow. Any valves in the flow line must be open when the pump is running.

**Do** use suction and delivery pipes equal to or larger than the bore of the tube in the pumphead. When pumping viscous fluids use pipe runs with a bore several times larger than the pump tube.

**Do** site the pump at or just below the level of the fluid to be pumped if possible. This will ensure flooded suction and maximum pumping efficiency.

**Do** keep the pumphead track and all moving parts clean and free from contamination and debris.

**Do** run at slow speed when pumping viscous fluids (though see Pressure advice in 1.8.1 *General recommendations*). Flooded suction will enhance pumping performance in all cases, particularly for materials of a viscous nature.

**120 pumps** may be wiped with a damp cloth, but should not be hosed or immersed. The front of the pump is further protected against light spillages.

**When using Marprene or Bioprene** continuous tubing, do re-tension the tube after the first 30 minutes of running.

**Tube selection**: The chemical compatibility lists published in Watson-Marlow publications are guides. If in doubt about the compatibility of a tube material and the duty fluid, request a Watson-Marlow tube sample card for immersion trials.

# 1.9 Power supply

The 120 pump is suitable for single-phase mains electricity supplies only via the double-insulated (Class II) 90-264VAC-to-24VDC mains adaptor. Use only the approved 24VDC Meanwell type GE24I24-P1JK DC adaptor or the Powersolve ESA24-24 DC adaptor supplied with the pump.

A well regulated electrical mains supply is required along with cable connections conforming to the best practice of noise immunity. It is not recommended to site these drives alongside "dirty" electrical mains supplies such as 3-phase contactors and inductive heaters without special attention being paid to unacceptable mains-borne noise.

### To prepare your power supply

- Select the mains input adapter appropriate to your region—UK, US, Australia or Europe—and slide it into position on the rear of the unit. Ensure it clicks into place.

**Stop/start power cycles**: Do not power up/power down for more than 100 starts per hour. A minimum interval of 3 seconds is required between power cycles.

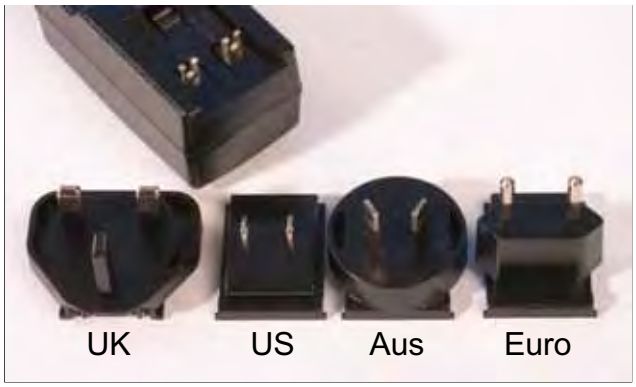

**We recommend using commercially available supply voltage surge suppression where there is excessive electrical noise.**

# 1.10 Dimensions

**Note**: A 120U pump drive is shown here. All drives have the same dimensions and weight (apart from drive shaft dimensions).

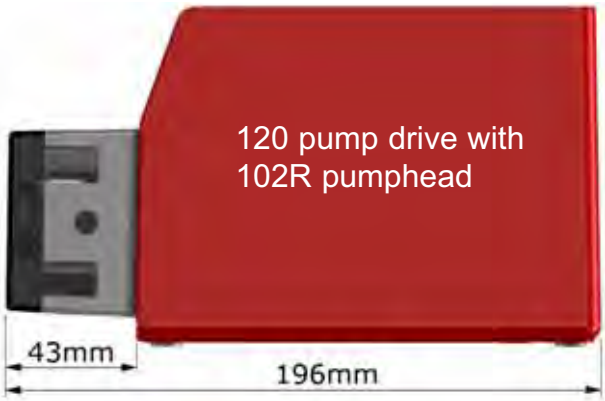


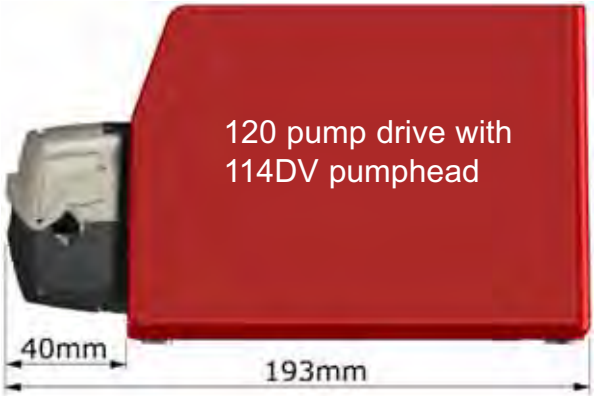


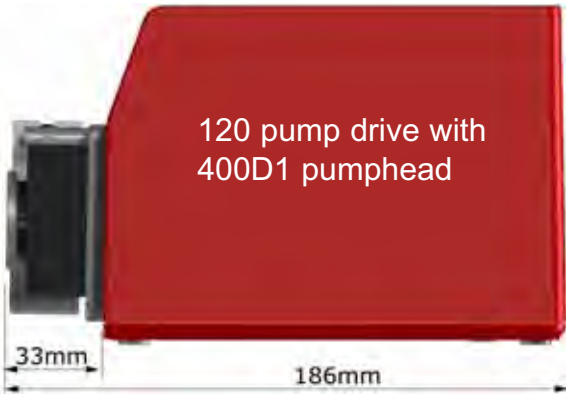


### Unit weights

| Drive only | + 114DV | + 102R | + 400D1 | + 400DM2 | + 400DM3 |
|---|---|---|---|---|---|
| 1.4kg | 1.5kg | 1.55kg | 1.65kg | 1.7kg | 1.7kg |

### IP (ingress protection) definition

This pump's ingress protection is rated IP31.

| 1st Digit: 3 | 2nd Digit: 1 |
|---|---|
| Protected against ingress of solid objects with a diameter of more than 2.5mm. Tools, wires etc with a thickness of more than 2.5mm are prevented from approach | Protection against dripping water falling vertically. No harmful effect must be produced |

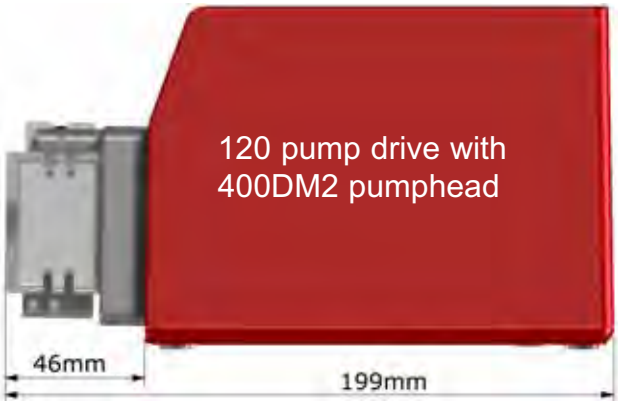


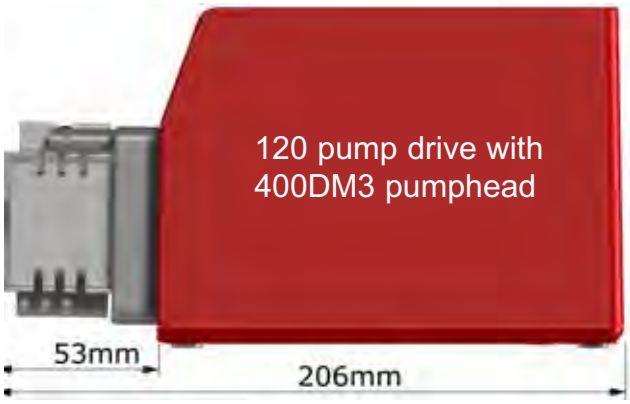

# 1.11 Start-up check list

**Note**: See also section 2 (120F, 120S or 120U drives) and section 3 (102R, 114DV or 400 series pumpheads) of these instructions.

- Ensure that proper connections are achieved between the pump tube and suction and discharge piping.
- Ensure proper connection has been made to the external DC power supply unit, and to a suitable power supply.
- Ensure that the recommendations in the section 1.8 *Good pump installation practice* are followed.

# 1.12 Drive maintenance

**There are no user-serviceable parts inside the pump. The unit should be returned to Watson-Marlow or its appointed agents or distributors for service.**

# 1.13 Drive spares

| |
|---|
| Dedicated external DC power supply unit and plug adaptors: MN2634B |
| Foot: FB0012 |

# 1.14 Decontamination certificate

In compliance with the *UK Health and Safety at Work Act* and the *Control of Substances Hazardous to Health Regulations*, you are required to declare the substances which have been in contact with product(s) you return to Watson-Marlow or its subsidiaries or distributors. Failure to do so will cause delays. Please ensure that you fax us this form and receive an RGA (Returned Goods Authorisation) before you despatch the product(s). A copy of this form must be attached to the outside of the packaging containing the product(s). Please complete a separate decontamination certificate for each product.

You are responsible for cleaning and decontaminating the product(s) before return.

| | | | |
|---|---|---|---|
| **Your name** | | **Company** | |
| **Address** | | | |
| **Postcode/zip** | | **Country** | |
| **Telephone** | | **Fax** | |
| **Product type** | | **Serial number** | |
| **To speed the repair, please describe all known faults** | | | |
| **The product has ...** | ☐ Been used ☐ Not been used | | |
| | *If the product has been used, please complete all the following sections.*<br>*If the product has not been used, please just sign this form.* | | |
| **Names of chemicals handled with product(s)** | | | |
| **Precautions to be taken in handling these chemicals** | | | |
| **Action to be taken in the event of human contact** | | | |
| | *I understand that the personal data collected will be kept confidentially in accordance with the UK Data Protection Act 1998.* | | |
| **Signature** | | **RGA number** | |
| | | **Your position** | |
| | | **Date** | |
| | *Please print out, sign and fax to Watson-Marlow Pumps at +44 1326 376009.* | | |

WATSON MARLOW Pumps

**WATSON-MARLOW MANUALS**

m-120u-ip31-gb-01 Original instructions

# Watson-Marlow 120U cased pumps Section 2 of 3: Operating manual

## Contents


2.1 Pump specifications 2
2.2 Good pump installation practice 3
2.3 Switching the pump on 3
2.4 Manual operation 4
2.4.1 Keypad functions in manual mode 4
2.4.2 Start and stop 4
2.4.3 Increase and decrease pump speed 4
2.4.4 Change direction of rotation 5
2.4.5 Prime the pump 5
2.4.6 Run the pump at maximum speed 5
2.4.7 Run the pump at minimum speed 5
2.4.8 Switch to automatic control 5
2.4.9 Auto-start 5
2.4.10 Keypad beep 5
2.4.11 ROM 5
2.4.12 Keypad lock 6
2.4.13 Defaults 6
2.4.14 Set maximum allowed speed 6
2.5 Remote control wiring 7
2.6 Remote/automatic control and operation 9
2.6.1 Remote stop/start when AUTO has not been pressed 9
2.6.2 Direction 9
2.6.3 DC tacho output 10
2.6.4 Digital alarm output 10
2.6.5 Supply voltages 10
2.6.6 How to get into auto speed operation 11
2.6.7 Remote stop/start when AUTO has been pressed 12
2.6.8 Speed: analogue input 12
2.6.9 Speed: remote potentiometer input 13
2.6.10 Set maximum allowed speed 13
2.7 Troubleshooting 14
2.7.1 Error codes 14

# 2.1 Pump specifications

A nameplate is fixed to the rear of the pump. It contains manufacturer and contact details, product reference number, serial number and model details.

**120U**
This pump can be controlled from the keypad or remotely. It features:

**Manual control**
Speed adjustment; run and stop; direction control; "max" key for rapid priming; "auto start" for automatic power recovery; "auto" key for changing between manual and auto control

**Remote digital control**
The pump can be digitally controlled with a contact closure or logic input signal

**Analogue control**
The pump speed can be controlled through an analogue signal input of 4-20mA or 0-10V

**Outputs**
Logic output designated for an alarm only
DC Tacho output

**Function comparison, models 101U and 120U**

| Function | 101U | 120U |
|---|---|---|
| Analogue input | 0-30mA and 0-30V | 4-20mA and 0-10V |
| Range and off-set trimming | possible | can only set the maximum speed |
| Signal inversion | possible | not possible |
| Tacho output | +5V and –5V at maximum speed | 5V at maximum allowed speed |
| Input impedance | 255Ω | 250Ω |
| Max speed options | 2 rpm or 32 rpm, model-dependant | single speed range, pumphead-dependant |
| Speed increments | 10% or 1% increments | 0.1 rpm in manual mode and 0.01 rpm in analogue mode |
| Analogue control | 2,000:1 control ratio | 20,000:1 control ratio |

### Pump specifications

| | |
|---|---|
| **Control range (turndown ratio)** | Manual control:<br>With 102R: 0.1-32 rpm (320:1)<br>With 114DV: 0.1-200 rpm (2,000:1)<br>With 400D1: 0.1-200 rpm (2,000:1)<br>With 400DM2: 0.1-100 rpm (1,000:1)<br>With 400DM3: 0.1-100 rpm (1,000:1)<br><br>Auto control:<br>With 102R: 0.01-32 rpm (3,200:1)<br>With 114DV: 0.01-200 rpm (20,000:1)<br>With 400D1: 0.01-200 rpm (20,000:1)<br>With 400DM2: 0.01-100 rpm (10,000:1)<br>With 400DM3: 0.01-100 rpm (10,000:1) |
| **Power supply DC input** | 24V @ 1A |
| **Software version** | Accessible through combination keypress |
| **Enclosure rating** | IP31 to BS EN 60529. Equivalent to NEMA 2, suiable for indoor use. Protected against dripping water and falling dirt. May be wiped with a damp cloth, but should not be immersed |
| **Pumphead options** | 114DV, 102R, 400D1, 400DM2 and 400DM3 |
| **Operating temperature range** | 5C to 40C, 41F to 104F |
| **Storage temperature range** | -25C to 65C, -13F to 149F |
| **Maximum altitude** | 2,000m, 6,560ft |
| **Humidity (non-condensing)** | 80% up to 31C, 88F, decreasing linearly to 50% at 40C, 104F |
| **Weight** | See *Section 1, General information* |
| **Noise** | <60dB(A) |

## 2.2 Good pump installation practice

The 120 pump must be mounted in the upright position and not inverted or placed on its rear face.

## 2.3 Switching the pump on

The pump is powered by a dedicated 24V external DC power supply unit which is supplied with the pump.

**Note: If you plan to operate the pump by controls external to the pump, the 15-way D-connector must be connected before power is supplied to the pump (see 2.5 *Automatic control wiring* and 2.6 *Remote/automatic control and operation*). If any change is made later to the 15-way D-connector, it must be reconnected before power is supplied to the pump.**

- Plug the power supply's output connector into the power socket on the rear of the pump.
- Plug the power supply unit into a mains power outlet and switch on. The pump performs a power-on test to confirm proper functioning of the memory and hardware. If a fault is found, an error message is displayed. See 2.7.1 *Error codes*.
- Load the pumphead with tube: see Section 3 of these instructions.

**The pump is now ready to operate according to the default settings.**

Operating parameters may be changed by means of key-presses. See 2.4 *Manual operation*.

To return the pump to its default settings, press and hold **DIRECTION** on power up.

| 120U start-up defaults | |
|---|---|
| **Set speed** | 32 rpm |
| **Maximum speed** | Maximum possible speed depending on pumphead |
| **Direction** | Clockwise |
| **Mode** | Manual |
| **Display** | Speed in rpm |
| **Display and LEDs** | On |
| **Pump status** | Stopped |
| **Keypad lock** | Off |
| **Auto-start** | Off |
| **Beeper** | On |
| **Max (prime)** | Maximum possible speed |
| **Scrolling increment** | 0.1 rpm |
| **Remote stop** | Open=run |
| **Output 1** | General alarm |

# 2.4 Manual operation

## 2.4.1 Keypad functions in manual mode

All settings and functions of the pump in manual mode are set and controlled by means of key presses. Immediately after power-up, the currently selected rotation speed is indicated on the display. Start-stop status, auto-start status, automatic control status and direction of rotation are indicated by LEDs beside their keys; keypad lock status is indicated by an LED beside the padlock symbol.

**Note**: Beeps sound to confirm the function of control keys only if keypad beep has not been turned off (see 2.4.10 *Keypad beep*).

**Note**: Remote stop/start, direction, DC tacho output and digital alarm output are active in both manual and auto modes.

## 2.4.2 Start and stop

To start the pump at the speed and in the direction indicated (see 2.4.4 *Change direction of rotation*), press the green **START** key on the keypad. A beep sounds and the LED beside the **START** key illuminates to confirm that the pump is operating. We recommend that the speed is reduced to a minimum (0.1 rpm) before starting the pump.

To stop the pump, press the red **STOP** key on the keypad. A beep sounds, the pump stops and the LED beside the **START** key goes out to confirm that the pump is stopped. The display continues to show the previous speed and direction. The pump will return to this speed and direction when the **START** key is pressed again.

## 2.4.3 Increase and decrease pump speed

Press and hold **UP** to increase the speed shown on the display in minimum steps of 0.1 rpm (unless the speed displayed is already the maximum allowed speed). Beeps sound while the key is held. If the pump is then started by pressing the **START** key, it operates at the new speed. If the pump is running when **UP** is pressed, the change takes effect immediately.

**The pump can be stopped at all times by pressing STOP on the keypad, whether it is in manual or auto mode.**

Press and hold **DOWN** to decrease the speed shown on the display in minimum steps of 0.1 rpm. Beeps sound while the key is held. If the pump is then started by pressing the **START** key, it operates at the new speed. The minimum running speed possible is 0.1 rpm. If the pump is running when **DOWN** is pressed, the change takes effect immediately.

**Note**: You can reduce the pump speed from 0.1 rpm to 0 rpm by a further press on the **DOWN** key. The LED beside the **START** key goes out. The pump is still in the running state and you can press the **UP** key to return the pump to the minimum speed.

## 2.4.4 Change direction of rotation

Press **DIRECTION** to toggle the sense of rotation. A beep sounds and the LED beside the clockwise-pointing arrow to the key's right illuminates to indicate clockwise rotation; the LED beside the counter-clockwise-pointing arrow to the key's left illuminates to indicate counter-clockwise rotation. If the pump is then started by pressing the **START** key, it rotates in the new direction. If the pump is running when **DIRECTION** is pressed, the change takes effect immediately.

## 2.4.5 Prime the pump

While pressed, **MAX** operates the pump at the maximum allowed speed and in the direction indicated. Beeps sound while the key is held. When released, the pump returns to its previous status. Priming can be achieved by pressing the **MAX** key until fluid flows through the pump and reaches the point of discharge, and then releasing the **MAX** key.

## 2.4.6 Run the pump at maximum allowed speed

Press **MAX** and **UP** together to set the pump to maximum allowed speed. Beeps sound while the keys are held. If the pump is then started by pressing the **START** key, it operates at the new speed. If the pump is running when **MAX** and **UP** are pressed, the change takes effect immediately.

## 2.4.7 Run the pump at minimum speed

Press **MAX** and **DOWN** together to set the pump to minimum speed. Beeps sound while the keys are held. If the pump is then started by pressing the **START** key, it operates at the new speed. If the pump is running when **MAX** and **DOWN** are pressed, the change takes effect immediately.

## 2.4.8 Switch to automatic control

Press **AUTO** to toggle the pump into and out of analogue control. A beep sounds and the LED beside the **AUTO** key illuminates to confirm that the pump is under analogue control, and will respond to any remote/auto signal. When started, the pump runs at the speed set by any analogue signal applied to the pump, and in the direction indicated.

When toggled from automatic control to manual control, the pump retains its speed setting.

## 2.4.9 Auto-start

Press **AUTO START** to toggle the auto-start function on and off. A beep sounds and the LED beside the **AUTO START** key illuminates to indicate that the auto-start function is on. If auto-start is on, the pump starts in the last selected condition following a power supply interruption. If auto-start is off, the pump waits for a press on the **START** key before starting in the last selected condition following a power supply interruption.

## 2.4.10 Keypad beep

While the pump is stopped, press **DIRECTION** and **UP** together to toggle the keypad beep on and off.

## 2.4.11 ROM

While the pump is stopped, press **DIRECTION** and **DOWN** together to display the pump's ROM version. Beeps sound while the keys are held.

## 2.4.12 Keypad lock

The keypad can be locked to prevent changes to pump speed or other settings, and make it possible only to start or stop the pump.

To lock the keypad while the pump is running:

- Hold down the **START** key for more than one second. A beep sounds, the LED beside the padlock symbol flashes briefly then illuminates and the keypad is locked. Only the **START** and **STOP** keys function. If another key is pressed while the keypad is locked and the pump is running, a message is briefly displayed: **Hold Strt**. This tells the user to press and hold the **START** key for more than one second to unlock the keypad and make the required key available.

To lock the keypad while the pump is stopped:

- Hold down the **STOP** key for more than one second. A beep sounds, the LED beside the padlock symbol flashes briefly then illuminates and the keypad is locked. Only the **START** and **STOP** keys function. If another key is pressed while the keypad is locked and the pump is stopped, a message is briefly displayed: **Hold Stop**. This tells the user to press and hold the **STOP** key for more than one second to unlock the keypad and make the required key available.

To unlock the keypad while the pump is running:

- Hold down the **START** key for more than one second. A beep sounds, the LED beside the padlock symbol flashes briefly then goes out and the keypad is unlocked.

To unlock the keypad while the pump is stopped:

- Hold down the **STOP** key for more than one second. A beep sounds, the LED beside the padlock symbol flashes briefly then goes out and the keypad is unlocked.

**Note**: In auto mode only, **START** pressed for more than 1 second toggles the keypad lock on or off.

## 2.4.13 Defaults

To return the pump to its default settings, press and hold **DIRECTION** on power up. See 2.3 *Switching the pump on*.

## 2.4.14 Set maximum allowed speed

While the pump is stopped, press **AUTO** and **UP** together to put the pump into Setup mode. The display shows the current maximum allowed speed, and flashes to indicate that the pump is in Setup mode. Use the **UP** and **DOWN** keys to select a new maximum allowed speed. Press **AUTO** to confirm the new maximum allowed speed. Press **STOP** to escape from the the change sequence and revert to the previous maximum allowed speed. The minimum maximum speed is 2 rpm.

# 2.5 Remote control wiring

Interfacing the pump with other devices is by means of a female 15-pin D-connector at the rear of the pump.

A mating male connector, screened for EMC compatibility, must be conventionally soldered to a screened control cable.

Recommended control cable: 7 strands 0.2mm, 24AWG, screened, circular, up to 15-core.

**The 15-way D-connector must be connected before power is supplied to the pump. If any change is made later to the 15-way D-connector, it must be re-connected before power is supplied to the pump.**

This pump passes all EMC compatibility requirements with up to 3m (10ft) of the cable type specified above. Beyond this distance it is the user's responsibility to ensure the pump is safe and reliable under remote and automatic control.

To minimise EMC interferance the wiring to the 15-pin D-connector must be screened. The screen must be earthed at the signal end of the wiring. To further reduce EMC the screened wiring must be threaded once or twice through a ferrite tubular cable shield or a hinged clamp core.

The signal ground and DC supply ground lines on this pump are isolated from ground by the external DC supply unit. It can be connected to isolated 0V or grounded 0V interfaces. The TTL (transistor transistor logic) output is composed of two states: nominally 0V and 5V; but in practice <0.4V (<16mA) and 2.4-5V (<0.4mA). They are not suitable for driving relays.

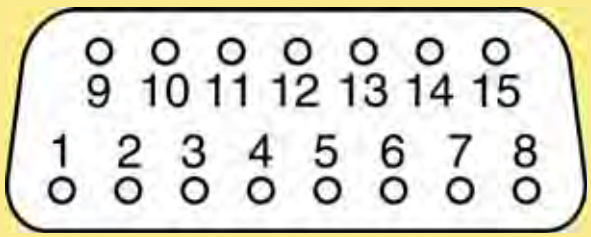


| Pin no | Input or output | Function | Referenced to |
|---|---|---|---|
| 1 | Digital input | Analogue Voltage or Current Signal Input Select | Connect to Digital Ground for Current |
| 2 | Analogue input | Analogue Voltage or Current Signal Input (+) | Referenced to Analogue Ground |
| 3 | Ground | Analogue Ground (0V) | |
| 4 | Digital input | Remote Direction Enable | Connect to Digital Ground to enable |
| 5 | Digital input | Remote Direction | Connect to 5VDC for counter-clockwise operation |
| 7 | Digital input | Manual or Auto Mode Select | Connect to 5VDC Supply for Auto Mode |
| 8 | Digital input | Remote Start/Stop | Connect to 5VDC Supply to stop |
| 9 | Analogue output | Analogue Tacho Output | Referenced to Analogue Ground (0-5VDC signal) |
| 10 | Ground | Analogue Ground (0V) | |
| 11 | Ground | Digital Ground (0V) | |
| 12 | Ground | Digital Ground (0V) | |
| 13 | DC supply | 5VDC Supply (+) | Referenced to Ground |
| 14 | Digital output | Alarm Output (5V TTL) | Referenced to Digital Ground |
| 15 | DC supply | 12VDC Supply (+) | Referenced to Ground |

**Note: The pin allocation of the 120U differs from the pin allocation of the 101U and the 401U. See overleaf for details.**

**Pin allocations, models 101U, 401U and 120U**

| Pin no | 101U | 401U | 120U |
|---|---|---|---|
| 1 | Analogue input current resistor (link to 0V) | Analogue input current resistor | Analogue voltage/current signal selection |
| 2 | Analogue speed input | Analogue speed input (+10V) | Analogue speed input (voltage/current) |
| 3 | Tacho output (0-5VDC) | Supply +5V | Ground 0V (analogue) |
| 4 | Remote direction enable | Remote direction (reverse) | Remote direction enable |
| 5 | Remote direction control | Remote direction (forwards) | Remote direction selection (CW/CCW) |
| 6 | Remote auto/man enable | Linked for current offset | For future use |
| 7 | Remote auto/man control | Linked for current offset | Remote auto/man selection |
| 8 | Remote stop | Ground 0V | Remote stop |
| 9 | Tacho output (0-5VDC) | Analogue control (+1V) | Tacho output (0-5VDC) |
| 10 | Ground 0V | Supply +18V | Ground 0V (analogue) |
| 11 | Ground 0V | Remote auto/man control | Ground 0V (digital) |
| 12 | Ground 0V | Not connected | Ground 0V (digital) |
| 13 | Supply +5V | Not connected | Supply +5V |
| 14 | Supply -5V | Not connected | Alarm output (5V TTL) |
| 15 | Supply +12V | Ground 0V | Supply +12V |

# 2.6 Remote/automatic control and operation

The pump can be operated by controls external to the pump: manually by a switch or potentiometer; or by an automatic control station. **You need not press the AUTO key unless you wish to control speed remotely: remote stop/start, direction, DC tacho output and digital alarm output are active in both manual and auto modes.**

Check that the pump is ready to run before remote/automatic operation. Signals may start the pump without warning.

**Never apply mains voltage to the 15-way D connector. Apply the correct signals to the pins shown below. Limit signals to the maximum values shown. Do not apply voltage across other pins. Permanent damage, not covered by warranty, may result.**

**The pump can be stopped at all times by pressing STOP on the keypad, whether it is in manual or auto mode.**

## 2.6.1 Remote stop/start when AUTO has not been pressed

Fit a switch between pins 8 and 13.

OR:

Apply a TTL logic signal to pin 8, ground to pin 12.

Press **START** on the keypad to enable remote stop/start.

See 2.6.6 *Remote stop/start* for remote stop/start instructions after **AUTO** has been pressed.

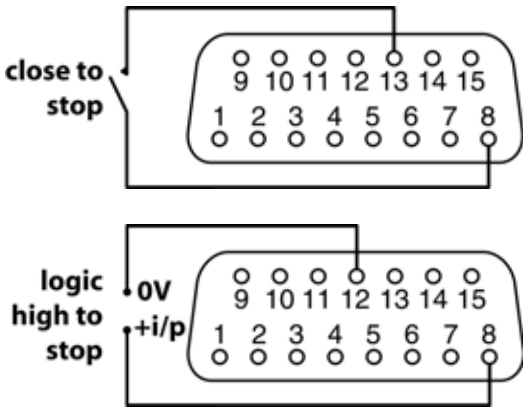


## 2.6.2 Direction

For remote direction change:

Enable remote direction control and disable the **DIRECTION** key on the keypad by fitting a link between pins 4 and 11.

Fit a switch between pins 5 and 13.

OR:

Apply a TTL logic signal to pin 5, ground to pin 12.

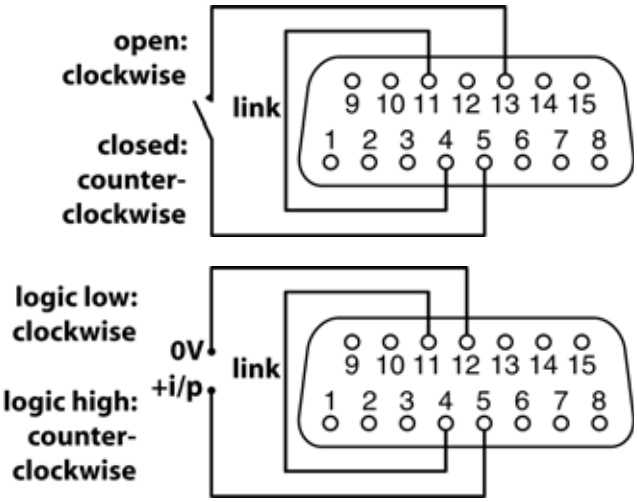

## 2.6.3 DC tacho output

For DC tacho output:

Connect external instrumentation: positive terminal to pin 9; negative terminal to pin 3.

**Note**: This output is designed for low-resistance equipment inputs of nominally 1kΩ.

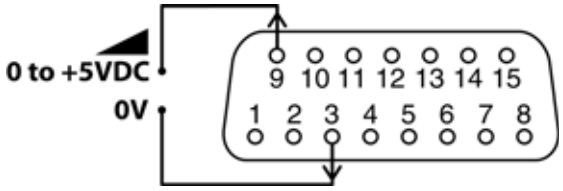


## 2.6.4 Digital alarm output

For digital alarm output (system errors only):

Connect an external TTL device: positive terminal to pin 14; negative terminal to pin 12.

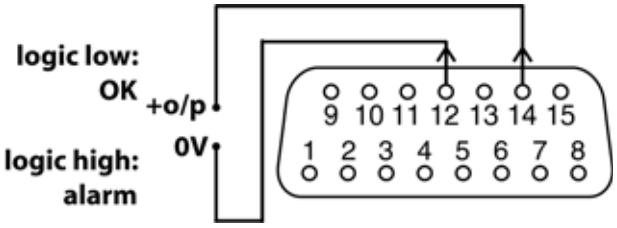


## 2.6.5 Supply voltages

+5VDC is available on pin 13. +12VDC is available on pin 15. Tolerances better than 10%. Both supplies are stabilised. Ground to pin 11 or pin 12.

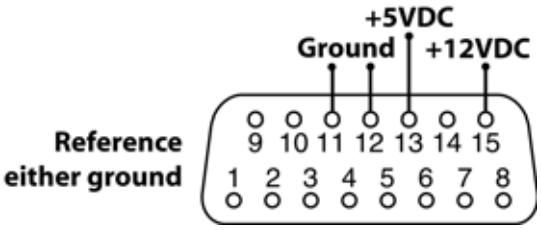


| DC Voltage | Max load | Pin | Typical use |
|---|---|---|---|
| +5V | 10mA | 13 | Voltage supply for inputs using remote switch. |
| +12V | 10mA | 15 | Possible voltage supply for inputs using remote switch. |

## 2.6.6 How to get into auto speed operation

Check that the pump is ready to run before remote/automatic operation. Signals may start the pump without warning.

- Press the **AUTO** key to select automatic operation. A beep sounds and the LED beside the **AUTO** key illuminates to indicate that the pump is under automatic speed control.
- The pump responds to the analogue signal as soon as this is done. Auto-start is automatically switched on. The only keys active are **STOP**, **AUTO** and **DIRECTION**.
- If remote direction input is active and the direction-enable link is applied, the **DIRECTION** key is disabled. If keypad lock is set, only **STOP** and **START** are active. **STOP** stops the pump and switches it to manual control (or, if the pump was put into auto mode by remote switching, to the auto-stop state—see *Alternatively*, below). **START** pressed for more than 1 second toggles the keypad lock on or off.
- The pump displays the speed at which the pump will rotate after receiving a high signal (20mA or 10V).

### Alternatively ...

A remote signal can select auto or manual control, overriding the keypad **AUTO** key setting.

Fit a switch or link between pins 7 and 13.

OR:

Apply a TTL logic signal to pin 7, ground to pin 12.

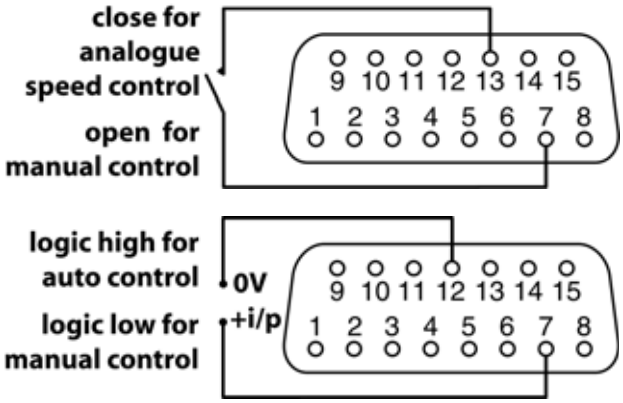

## 2.6.7 Remote stop/start when AUTO has been pressed

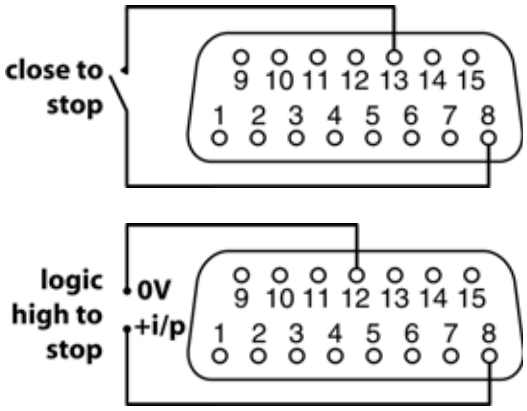


Fit a switch between pins 8 and 13.

OR:

Apply a TTL logic signal to pin 8, ground to pin 12.

See 2.6.1 *Remote stop/start* for remote stop/start instructions if **AUTO** has not been pressed.

## 2.6.8 Speed: analogue input

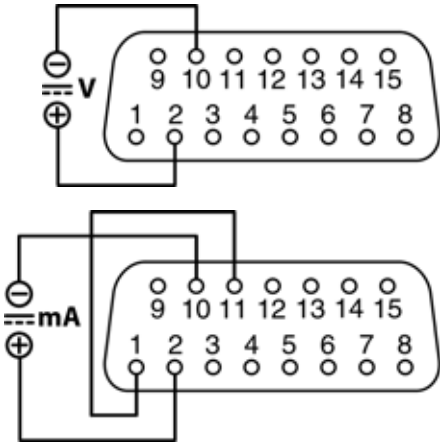


When **AUTO** has been pressed, pump speed can be controlled remotely by an analogue process signal within the range 0-10V; or 4-20mA. The pump provides an increasing flow rate for a rising control signal.

### Voltage signal

0-10VDC. Input impedance: 24kΩ.

Connect a voltage source: negative terminal to pin 10; positive terminal to pin 2.

### Current signal

4-20mA. Input resistance: 250Ω.

Fit a link between pins 1 and 11.

Connect a current source: negative terminal to pin 10; positive terminal to pin 2.

## 2.6.9 Speed: remote potentiometer input

For remote potentiometer speed input, when **AUTO** has been pressed:

Connect a potentiometer (±5% tolerance recommended) between pins 12 and 15, with a resistor in series on the Max side of the potentiometer. Typical potentiometer value is 1kΩ-5kΩ. The resistor value should be 180R when a 1kΩ potentiometer is used; the resistor value should be 1kΩ when a 5kΩ potentiometer is used.

**Note**: The resistor value may have to be adjusted higher or lower to achieve the full pump speed range.

Connect the potentiometer wiper to pin 2.

**Note**: Set the pump to analogue control. Do not apply a voltage or current control input signal at the same time. Performance will depend on the tolerances of components used.

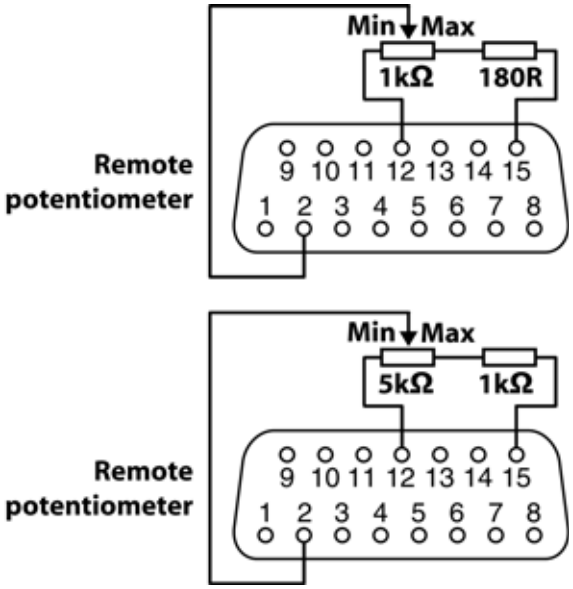


## 2.6.10 Set maximum allowed speed

While the pump is stopped, press **AUTO** and **UP** together to put the pump into Setup mode. The display shows the current maximum allowed speed, and flashes to indicate that the pump is in Setup mode. Use the **UP** and **DOWN** keys to select a new maximum allowed speed. Press **AUTO** to confirm the new maximum allowed speed. Press **STOP** to escape from the the change sequence and revert to the previous maximum allowed speed. The minimum maximum speed is 2 rpm.

**Note**: To increase the control resolution when the maximum speed of the pump is not required, decrease the the maximum allowed speed. This is particularly useful if you are replacing a 101U/R 2 rpm pump with a higher-speed 120U/R pump.

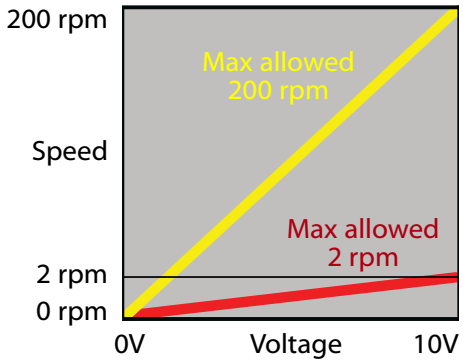

# 2.7 Troubleshooting

If the pump fails to operate, make the following checks:

- Check that the dedicated external DC power supply unit is plugged into a working mains power source which is switched on. Check that the power supply unit's LED is illuminated (if fitted).
- Check that the dedicated external DC power supply unit's output connector is plugged into the pump.

If the pump runs but there is little or no flow, make the following checks:

- Check that tubing is installed in the pumphead; check that it is the correct wall thickness: 1.6mm. See section 3 of these instructions.
- Check that the tube is not split or burst.
- Check for any kinks or blockages in the lines.
- Check that any valves in the lines are open.
- Check that the rotor is in the pumphead, that it rotates and that the rollers are in good condition.
- Check that fluid is supplied to the pump.

## 2.7.1 Error codes

If an internal error occurs, an error screen is displayed.
**Note**: **Signal out of range** and **Over signal** report the nature of an external signal.

| Error code | Error condition | Suggested action |
|---|---|---|
| Er 0 | FRAM write error | Attempt to reset by switching power OFF / ON. Or seek support |
| Er 1 | FRAM corruption | Attempt to reset by switching power OFF / ON. Or seek support |
| Er 2 | FLASH write error during drive update | Attempt to reset by switching power OFF / ON. Or seek support |
| Er 3 | FLASH corruption | Attempt to reset by switching power OFF / ON. Or seek support |
| Er 4 | FRAM shadow error | Attempt to reset by switching power OFF / ON. Or seek support |
| Er 9 | Motor stalled | Stop pump immediately. Check pumphead and tube. Power OFF/ON may reset. Or seek support |
| Er10 | Tacho fault | Stop pump immediately. Power OFF/ON may reset. Or seek support |
| Er14 | Speed error | Stop pump immediately. Power OFF/ON may reset. Or seek support |
| Er15 | Over current | Stop pump immediately. Check system. Power OFF/ON may reset. Or seek support |
| Er16 | Over voltage | Stop pump immediately. Check mains voltage selector switch. Check supply. OFF/ON may reset. Or seek support |
| Er17 | Under voltage | Stop pump immediately. Check mains voltage selector switch. Check supply. OFF/ON may reset. Or seek support |
| Er19 | Over temperature | Stop pump immediately. Turn OFF. Seek support |
| Er20 | Signal out of range | Check analogue control signal range. Trim signal as required. Or seek support |
| Er21 | Over signal | Reduce the analogue control signal |
| Er30 | Over power | Turn OFF. Check power supply. Check pumphead and tubing. Wait 30 minutes. Power ON may reset. Or seek support |
| Err | General error condition | Turn OFF. Seek support |

WATSON-MARLOW MANUALS

m-114pumphead for 120-gb-02 Original instructions

# Watson-Marlow 120 cased pumps Section 3 of 3: 114DV pumpheads

## Contents


3.1 Product specifications 2
3.2 114DV safety information 2
3.3 114DV pumping conditions: pressure and viscosity 3
3.4 114DV pumphead installation 3
3.5 Tube holder positioning 4
3.5.1 Tube holder repositioning 5
3.6 Tube loading and removal 6
3.7 114DV pumphead spares 6
3.8 114DV performance data 7
3.9 114DV continuous tubing product codes 8
3.10 Trademarks 8
3.11 Do not use pumps in patient-connected applications 8
3.12 Publication history 8

# 3.1 Pumphead specifications

The 114DV pumphead has four rollers and accepts 1.6mm wall thickness tubing only. New tubing can be easily loaded into the flip top design. The top closes with a "clamp and stretch" action to locate the tube in the correct position and with the correct tension.

**This symbol, used on the pump and in this manual, means: Caution, refer to accompanying documents.**

**This symbol, used on the pump and in this manual, means: Do not allow fingers to contact moving parts.**

# 3.2 114DV safety information

**There are moving parts inside the pumphead. Before opening the pumphead track, ensure that the following safety directions are followed.**

- Ensure that the pump is isolated from the mains power.
- Ensure that there is no pressure in the pipeline.
- If a tube failure has occurred, ensure that any fluid in the pumphead has been allowed to drain to a suitable vessel, container or drain.
- Protective clothing and eye protection must be worn if hazardous fluids are pumped.

## 3.3 114DV pumping conditions: pressure and viscosity

- All pressure values in this operating instruction, from which performance life figures have been calculated, relate to root mean square (RMS) pressure, giving a more relevant pressure value than figures quoted in terms of peak pressure. The RMS pressure is similar to the value you would read on a damped analogue gauge.
- Ensure that there is always a minimum of one metre of flexible tubing connected to the discharge side of the pumphead. This helps to minimise any impulse losses and pulsation in the pipeline. This is especially important with viscous fluids and rigid pipework.

## 3.4 114DV pumphead installation

A correctly engineered installation will promote the best possible tube life, so please ensure that the following guidelines are followed:

- Avoid tight pipeline bends, pipe reducers and excessive lengths of smaller bore tubing than that in the pumphead, particularly in pipelines on the suction side.
- Ensure that connecting pipework and fittings are suitably rated to handle the predicted pipeline pressure.
- If rigid pipework comes in close proximity to the pumphead, a drop-out section of pipework will simplify tube replacement.

# 3.5 Tube holder positioning

The pumphead can be adjusted to accommodate 1.6mm wall tubing in sizes from 0.5mm bore to 4.8mm bore.

**Tube holder position**

| Tube bore size | 0.5mm | 0.8mm | 1.6mm | 2.4mm | 3.2mm | 4.0mm | 4.8mm |
|---|---|---|---|---|---|---|---|
| Inner | ✓ | ✓ | ✓ | ✓ | ✓ | ✗ | ✗ |
| Outer | ✗ | ✗ | ✗ | ✓ | ✓ | ✓ | ✓ |

With the smaller bore tubes of 0.5mm, 0.8mm and 1.6mm the inner position must be used to prevent the risk of tube slipping through the clamps and wandering across the rollers causing premature tube rupture.

With the larger bore tubes of 4.0mm and 4.8mm the outer position must be used to prevent the flow rate being excessively reduced.

For tubing bores of 2.4mm and 3.2mm either setting may be used, as appropriate for the application. The inner setting will clamp the tube harder, reducing tube slip but has the potential to marginally reduce flow rate. The outer setting will optimise flow rate but the risk of tube slip is increased.

The tube holder is factory pre-set to the outer position.

**Outer position, for large tubing**

**Inner position, for small tubing**

## 3.5.1 Tube holder repositioning

### To change from the large tube to the small tube setting

Switch off the pump before changing the tube holder position. Use a pointed device such as a ball-point pen to reposition the lower tube holders **on both sides** of the pumphead.

- Lift the flip top until fully open.
- Place the pointed device pointing down into the small depression pictured here.
- Press down and slightly away from the front of the pumphead, as shown in the first picture above.
- Maintain the angled downward pressure and push away from the front of the pumphead. The jaw clicks into a new position.
- Release the pressure. The jaw rises into its correct alignment. If it does not rise, repeat the procedure, being sure to maintain downward pressure until release.
- Adjust the tube holder on the other side of the pumphead in the same way.

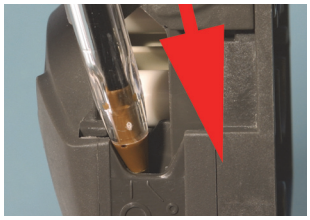

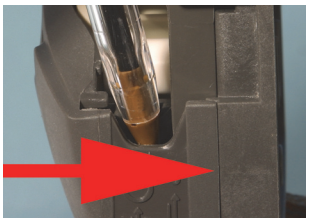

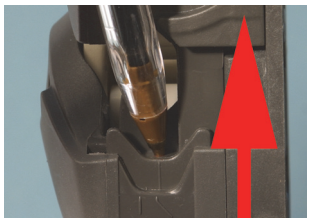

### To change from the small tube to the large tube setting

Carry out the procedure described above, but pushing towards the front of the pumphead.

**Note**: The pictures on the previous page show the tube holders' correct positions for small and large tubing. If a tube holder is not vertical relative to the body of the pumphead, it is wrongly positioned. Follow the instructions above to reposition it.

# 3.6 Tube loading and removal

Check that the tube holders on both sides of the pumphead are correctly set for the size of tube you are using.

- Lift the flip top until fully open.
- Select enough tube length for the curve of the pump track. Place the tube between the rotor rollers and the track, pressed against the pumphead inner wall. The tube must not be twisted or stretched against the rollers.
- Lower the flip top until it clicks into its fully closed position. The track closes automatically and the tube is stretched correctly as it does so.
- To remove the tube, reverse the sequence.

**Always isolate the pump from the mains power supply before opening the guard or performing any positioning, removal or maintenance activity.**

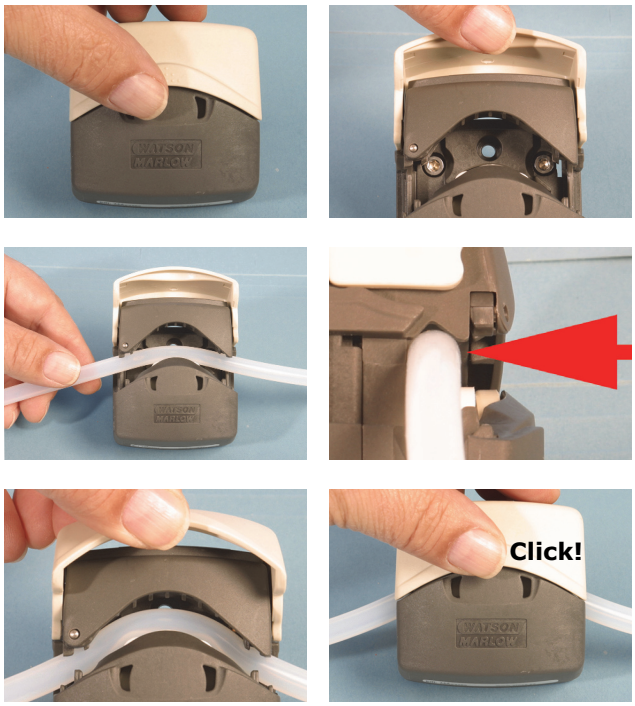


# 3.7 114DV pumphead spares

| | |
|---|---|
| 013.6000.00A | 114DV pumphead with tube holder pre-set into larger bore setting |

# 3.8 114DV Performance data

Flow rates are normalised test values obtained using new tubing with the pumphead rotating clockwise pumping water at 20C with negligible inlet and discharge pressure. Actual flow rate achieved may vary because of changes in temperature, viscosity, inlet and discharge pressures, system configuration and tubing performance against time. Flow rates may also vary due to normal manufacturing tolerances of the tubing. These tolerances will make flow rate variance more pronounced at smaller bore sizes.

**For precise and repeatable performance it is important to determine flow rates under operating conditions for each new piece of tubing.**

**Note**: Flow rates quoted have been rounded for simplicity, but are accurate to within 5%, well within the normal tubing tolerance variation of flow rate. They should therefore be taken as a guide. Real flow rates in any application must be determined empirically.

**120F: All tubing materials (ml/min)**

| Fixed speed | 0.5 mm | 0.8 mm | 1.6 mm | 2.4 mm | 3.2 mm | 4.0 mm | 4.8 mm |
|---|---|---|---|---|---|---|---|
| **10 rpm** | 0.2 | 0.4 | 1.4 | 2.9 | 4.7 | 6.7 | 8.5 |
| **17 rpm** | 0.3 | 0.7 | 2.4 | 4.9 | 8 | 11 | 14 |
| **31 rpm** | 0.6 | 1.2 | 4.3 | 9.0 | 15 | 21 | 26 |
| **52 rpm** | 1.0 | 2.1 | 7.3 | 15 | 25 | 35 | 44 |
| **220 rpm** | 4.4 | 8.8 | 31 | 64 | 100 | 150 | 190 |

**120U: All tubing materials (ml/min)**

| Speed | 0.5mm | 0.8mm | 1.6mm | 2.4mm | 3.2mm | 4.0mm | 4.8mm |
|---|---|---|---|---|---|---|---|
| **0.1-200 rpm** | 0.002-4 | 0.004-8 | 0.01-28 | 0.03-58 | 0.05-94 | 0.07-130 | 0.09-170 |

**120S: All tubing materials (ml/min)**

| Speed | 0.5mm | 0.8mm | 1.6mm | 2.4mm | 3.2mm | 4.0mm | 4.8mm |
|---|---|---|---|---|---|---|---|
| **1-200 rpm** | 0.02-4 | 0.04-8 | 0.14-28 | 0.29-58 | 0.47-94 | 0.67-130 | 0.85-170 |

### Pressure and flow performance curve

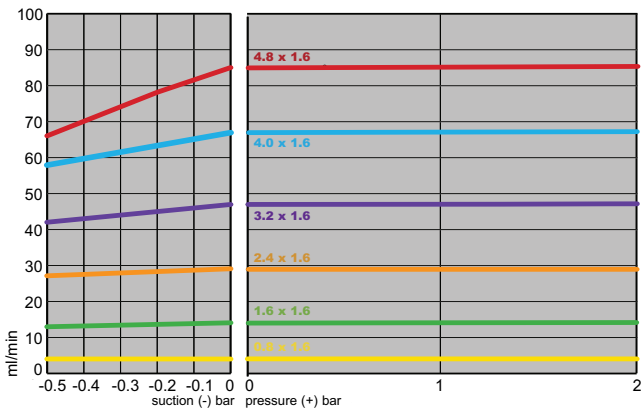


Marprene tubing, 1.6mm wall, 100 rpm, CCW rotation. **Note**: The 120S and the 120U must be run counter-clockwise to achieve pressures up to 2 bar. The 120F is a transfer-only, 0 bar pump.

# 3.9 114DV continuous tubing product codes

**1.6mm wall thickness tubing for the 114DV pumphead**

| mm | # | Marprene | Bioprene | Pumpsil |
|---|---|---|---|---|
| **0.5** | **112** | 902.0005.016 | 933.0005.016 | 913.A005.016 |
| **0.8** | **13** | 902.0008.016 | 933.0008.016 | 913.A008.016 |
| **1.6** | **14** | 902.0016.016 | 933.0016.016 | 913.A016.016 |
| **2.4** | | 902.0024.016 | 933.0024.016 | 913.A024.016 |
| **3.2** | **16** | 902.0032.016 | 933.0032.016 | 913.A032.016 |
| **4.0** | | 902.0040.016 | 933.0040.016 | 913.A040.016 |
| **4.8** | **25** | 902.0048.016 | 933.0048.016 | 913.A048.016 |
| **mm** | **#** | **STA-PURE PCS** | **STA-PURE PFL** | |
| **1.6** | **14** | 960.0016.016 | 965.0016.016 | |
| **3.2** | **16** | 960.0032.016 | 965.0032.016 | |
| **4.8** | **25** | 960.0048.016 | 965.0048.016 | |

# 3.10 Trademarks

**Bioprene**, **Marprene, Pumpsil** and **Watson-Marlow** are trademarks of Watson-Marlow Limited.
**GORE STA-PURE PCS** and **GORE STA-PURE PFL** are trademarks of W.L.Gore and Associates.

# 3.11 Do not use pumps in patient-connected applications

**Warning** These products are not designed for use in, and should not be used for patient-connected applications.

# 3.12 Publication history

m-114pumphead for 120-gb-01.qxp:
Watson-Marlow 114 pumphead.
First published 07 10. Revised 09 14.