INSTRUCTIONS FOR ASSEMBLY

MODEL C-10 SERIES
CHROMATO-VUE® CABINET

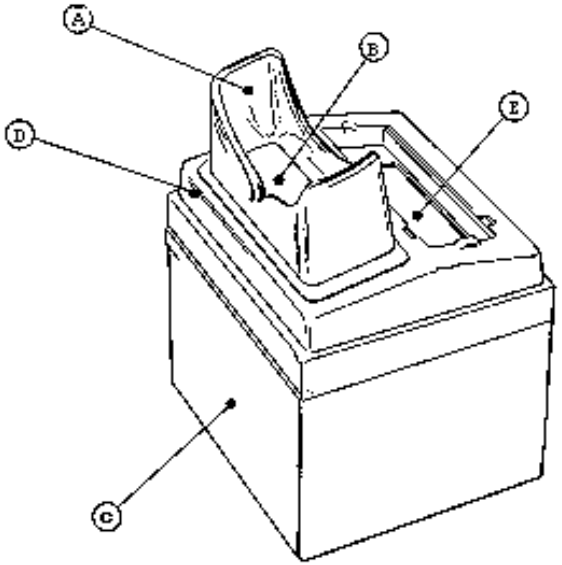

1. Lift flexible eyepiece (A) and cover assembly (D) out through top of cabinet.

2. Slip lamp well (E) portion of cover assembly over rim at back of cabinet until flush with top. Apply enough pressure toward front portion to snap over rim. Ensure that cover assembly is flush with top on all sides.

3. Slip flexible eyepiece over rim above contrast control filter (B) with notched portion facing front of cabinet.

4. Place the Mineralight® lamp into the molded lamp well with power cord placed to the left. The Chromato-Vue cabinet is now ready to use. Lift light curtain (C) when placing or positioning materials; leave in closed position when in use to block external light from entering the cabinet.

UVP

C-10P
CHROMATO-VUE CABINET

The difference between the C-10, C-10E and C-10P Cabinets is the addition of a lamp support bracket on the C-10P. The purpose of the bracket is to hold the portable lamp securely in place.

To assemble the C-10P, follow the C-10 Cabinet Series instructions numbers 1 through 3. Instruction No. 4 for the C-10P is as follows:

4. Place the portable lamp in the lamp support bracket. This bracket firmly holds the lamp in place. The Chromato-Vue cabinet is now ready to use. Lift light curtain (C) when placing or positioning materials; leave the curtain in the closed position when in use to block out any outside light.

Replacement Parts:

Eyepiece:	23-0036-01
Contrast Control Filter:	38-0013-01

Corporate Headquarters: UVP, LLC
2066 W. 11th Street Upland, CA 91786 / Tel: (800) 452-6788
(909) 946-3197 / Fax: (909) 946-3597

European Operations: Ultra-Violet Products Ltd
Unit 1, Trinity Hall Farm Estate, Nuffield Road,
Cambridge CB4 1TG UK / Tel: +44(0)1223 420022
Fax: +44(0)1223 420156

For additional information on UVP's products, go to **www.UVP.com**

81-0008-01 Rev G

Mineralight and Chromato-Vue are registered trademarks of UVP, LLC

ACCESSORIES

UVL-13R Accessories ... Use the wall adapter (115volt/12 amp, 2000 ma operation) for office/home use. For field use, order a *battery pack and charger* (P/N 45-0014-01), *cigarette plug* (58-0043-01) and *alligator clips* (58-0153-02).

Chromato-Vue® Cabinets ... A darkroom environment is created with the C-10 Cabinet (P/N 95-0072-01). Materials can be placed inside the cabinet and viewed through the UV blocking viewport. Access to cabinet interior is easy with the light-blocking curtain.

Lamp Stands ... Models UVL-23RS and UVL-23RW include a lamp stand. Lamp stands are available for other models — *J124 stand* (98-0020-03) is for compact lamps and the *J129 stand* (98-0016-03) is for use with the hand-held lamps.

Blak-Ray® UV Protective and Contrast Control Spectacles ... Special formula lenses of the Goggles (98-0002-02) reduce "blue haze" interference while providing maximum protection from extended use of high intensity UV light sources while the *Spectacles* (98-0002-01) are used for sporadic use, lower intensity UV light sources and can be worn comfortably over prescription glasses.

PRODUCT WARRANTY

UVP's products are guaranteed to be free of defects in materials, workmanship and manufacture for one (1) year from the date of purchase; transilluminators are guaranteed for (2) years. Consumable and disposable parts including, but not limited to bottles, tubes and filters, are guaranteed to be free from defects in manufacture and materials for ninety (90) days from date of purchase. If equipment failure or malfunction occurs during the warranty period, UVP shall examine the inoperative equipment and have the option of repairing or replacing any part(s) which, in the judgment of UVP, were originally defective or became so under conditions of normal usage and service.

No warranty shall apply to any instrument, or part thereof, that has been subject to accident, negligence, alteration, abuse or misuse by the end-user. Moreover, UVP makes no warranties whatsoever with respect to parts not supplied by UVP or that have been installed, used and/or serviced other than in strict compliance with the instructions appearing in the operational manual supplied to the end-user.

In no event shall UVP be responsible to the end-user for any incidental or consequential damages, whether foreseeable or not, including, but not limited to property damage, inability to use equipment, lost business, lost profits, or inconvenience arising out of or connected with the use of instruments produced by UVP. Nor is UVP liable or responsible for any personal injuries occurring as a result of the use, installation and/or servicing of equipment. This warranty does not supersede any statutory rights that may be available in certain countries.

Web Site: www.uvp.com

Corporate Headquarters: UVP, LLC 2066 W. 11th Street, Upland, CA 91786
Tel: (800) 452-6788 · (909) 946-3197 E-Mail: info@uvp.com

European Operations: Ultra-Violet Products Ltd., Unit 1, Trinity Hall Farm Estate, Nuffield Road, Cambridge CB4 1TG UK • Tel: +44(0) 1223 420022 E-Mail: uvp@uvp.co.uk

Mineralight, Blak-Ray and Chromato-Vue are registered trademarks of UVP, Inc.

81-0003-02 Rev L

Compact & Handheld Ultraviolet Lamps OPERATING INSTRUCTIONS

WARNING

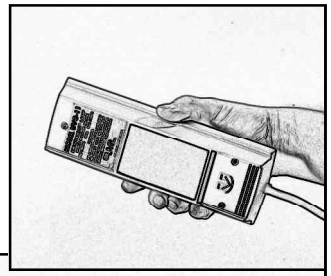

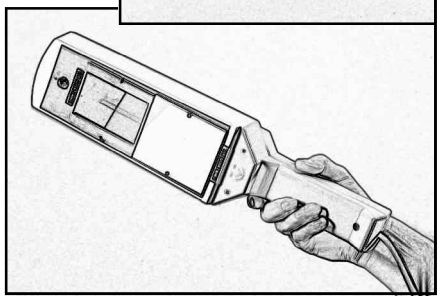

Do not look into a lighted shortwave or multi-band Mineralight lamp as it can quickly sunburn your eyes and skin. Always hold Mineralight® lamps so that the light beams are away from you. The Blak-Ray® lamp's longwave ultraviolet is generally considered harmless to the average person. Individuals that are photosensitive or are subject to long term exposures may expect adverse reactions if they do not have adequate protection.

ULTRAVIOLET LIGHT

Ultraviolet energy cannot be detected by the human eye. A bluish light will be visible through the filter of your lamp. This is due to the emission of visible light from the tube. The special filter eliminates most of the visible light interference. Ultraviolet energy is just shorter in wavelength than visible light and can be divided into three groups:

Longwave ... The ultraviolet energy nearest to the visible light range (commonly called black light), activates fluorescence in numerous natural substances and manufactured materials.

Midrange ... The ultraviolet energy representing the shortest wavelengths found in sunlight, causing sunburn and used to fluoresce certain substances more effectively than shortwave or longwave ultraviolet light.

Shortwave ... The ultraviolet energy farthest from visible light, shorter than rays in sunlight, and primarily noted for its ability to fluoresce minerals for chemical analysis, and for its germicidal effects.

For information on ultraviolet lamp applications, refer to UVP's web site:
Click on Application Notes

UVP

USING THE ULTRAVIOLET LAMP

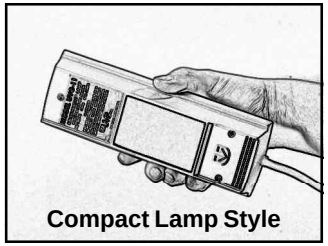
Compact Lamp Style

Plug your lamp into a standard AC outlet. Single ultraviolet wavelength lamps utilize an ON/OFF rocker switch. Multiple ultraviolet wavelength lamp models use an ON/OFF/ON rocker switch where the ON corresponds to the UV wavelengths. These ultraviolet lamps are designed for use in dark or semi-dark areas. Allow enough time for your eyes to adjust to the darkness prior to using the lamp. Some materials will tend to fluoresce brighter than others. This reaction is due to the concentration of fluorescence on the material and varying degrees of brightness of different colors.

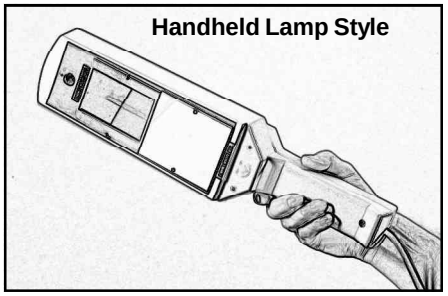
Handheld Lamp Style

UVL-13R and UVL-9R operate with a 12V connector which plugs into an automobile cigarette lighter. These portable lamps are excellent for field use and can be used for windshield curing. The lamp can be attached to the window with suction cups (purchased separately). These lamps can also be operated from a wall outlet or with the use of an optional battery pack and charger, or alligator clips (see accessories for ordering information).

USING THE WAVELENGTH SELECTOR (Models ***UVGL-55, UVGL-15***)

The wavelength selector is included on multi-band lamps — half longwave and half shortwave. The wavelength selector is designed to block off either longwave or shortwave on these lamps. The selector can be slid up and down to give you either wavelength. When the selector is moved over the bottom half of the filter area, it blocks the longwave UV, allowing only shortwave UV to be emitted. By sliding the selector over the top half of the filter, only the longwave UV is emitted. The wavelength selector snaps on or off the lamp easily.

WARNING: REMOVE POWER CORD FROM POWER SOURCE PRIOR TO SERVICING.

FILTER ASSEMBLY AND TUBE REPLACEMENT

Filters on the longwave lamps last indefinitely and should never need replacing unless broken. Lamps with a BLB tube do not use a filter as the BLB tube is self-filtered. Shortwave and midrange filters have an average life of 1000 hours.

Compact Lamps ... To replace the filter or UV tube on the four-watt compact lamp assembly, remove the product label on the face of the lamp as one (or two depending on the model) of the screws is located under the label.

To remove the filter and frame assembly, unscrew the four retaining screws. Two screws are located above the filter and one below. Replace the filter and frame assembly with the new replacement assembly and insert and tighten the four screws. To remove the tube, grasp the tube ends by twisting one quarter turn until the tube is free.

Handheld Lamps ... To change the filter on six-watt models, the filter assembly snaps out of the lamp housing. Remove the lower housing. To remove the tube, carefully grasp the tube ends by twisting one quarter turn until the tube is free. Insert the new tube, giving it a twist to lock in place. Reassemble filter assembly.

Note: when replacing a multi-band shortwave/longwave tube, be sure to place the longwave tube side on the proper end.

REPLACEMENT PARTS

MODEL	TUBE/WAVELENGTH	FILTER/FRAME
FOR HANDHELD LAMP MODELS		
UVG-54	34-0013-01 254nm shortwave	98-0004-03
UVGL-55	34-0015-01 254/365nm	98-0005-03
UVL-56	34-0034-01 365nm longwave	98-0006-03
UVGL-58	34-0013-01 254nm shortwave	98-0004-03
	34-0034-01 365nm longwave	
UVM-57	34-0044-01 302nm midrange	98-0004-03
UVL-13R	34-0082-01 365nm BL	98-0006-03
UVS-13	34-0081-01 254nm shortwave	98-0004-03
FOR COMPACT LAMP MODELS		
UVG-11	34-0003-01 254nm shortwave	98-0016-02
UVGL-15	34-0004-01 254/365nm	98-0017-02 (SW)
UVL-21	34-0005-01 365nm longwave	
UVGL-25	34-0003-01 254nm shortwave	98-0016-02
	34-0005-01 365nm longwave	
UVL-23	34-0010-01 365nm longwave	
UVL-23R	34-0005-01 365nm longwave	
UVL-23RW	34-0005-01 365nm longwave	
UVL-9R	34-0080-02 365nm longwave	

REPAIRS

Contact UVP's offices with any questions. To return a unit to the factory for repair, call UVP's Customer Service Department for a ***Return Authorization Goods (RGA)*** number prior to sending the unit. Contact:

Corporate Headquarters: UVP, LLC, 2066 W. 11th Street, Upland, CA 91786
Tel: (800) 452-6788 · (909) 946-3197

European Operations: Ultra-Violet Products Ltd., Unit 1, Trinity Hall Farm Estate, Nuffield Road, Cambridge CB4 1TG UK • Tel: +44(0) 1223 420022