sartorius

**User Manual**

# Sartorius Cubis Series

Electronic Semimicro, Micro, Precision and Analytical Balances
MSA Models

# Contents


**Notes on Using this Manual** . . . . . 3
**Safety Instructions** . . . . . 4
Intended Use. . . . . 6
**General View of the Equipment and Equipment Supplied** 6
**Getting Started** . . . . . 9
Installation Instructions. . . . . 17
Power Cord Receptacle . . . . . 17
Anti-theft Locking Device . . . . . 19
Preparing Below-Balance Weighing . . . . . 26
Moving the Balance . . . . . 29
**Using the Balance** . . . . . 30
Turning the Balance On/Off . . . . . 30
Operating Concept: Q-Guide . . . . . 30
Using the Display and Control Unit . . . . . 31
Quick Guide: First Weighing . . . . . 32
User Interface (Touch Screen) . . . . . 33
Using the Touch Screen. . . . . 34
Activating/Switching Users . . . . . 36
**System Settings (Menu)** . . . . . 37
Leveling the Balance (Q-Level). . . . . 38
Configuring Calibration/Adjustment . . . . . 39
Timer-controlled Actions. . . . . 40
Displaying Device Information. . . . . 42
Alibi Memory . . . . . 43
Device Parameters. . . . . 46
**Task Management** . . . . . 58
Importing Tasks . . . . . 58
Using Applications with the Factory Settings . . . . . 59
Creating New Tasks (Configuration). . . . . 59
Configuring a Printout . . . . . 62
Combining Applications into One Task . . . . . 68
Executing Tasks . . . . . 69
**Weighing** . . . . . 70
**Mass Unit Conversion**. . . . . 71
**Minimum Sample Quantity SQmin** . . . . . 74
**Individual Identifiers** . . . . . 76
**Density Determination** . . . . . 79
**Statistics** . . . . . 84
**Calculation**. . . . . 87
Examples of Calculation Formulas . . . . . 90
Diameter Determination . . . . . 90
Diameter Determination for Cylindrical Bodies . . . . . 92
Air Buoyancy Correction . . . . . 92
**Averaging**. . . . . 95
**Formulation** . . . . . 100
**Weighing in Percent**. . . . . 104
**Timer-controlled Functions** . . . . . 107
**Totalizing** . . . . . 109
**DKD Measurement Uncertainty** . . . . . 111
**Second Tare Memory (Preset Tare)**. . . . . 113
**Parts Counting** . . . . . 115
**Checkweighing**. . . . . 119
**Importing/Exporting Data** . . . . . 123
**Calibration and Adjustment** . . . . . 126
Calibration/Adjustment Using Internal Check Weight . 126
Calibration/Adjustment Using External Check Weight. 127
**User Management** . . . . . 129
User Management. . . . . 129
Creating User Profiles . . . . . 129
Activating Users . . . . . 132
Editing User Profiles . . . . . 133
**Interfaces**. . . . . 135
USB Port (PC) . . . . . 136
PS2 Interfaces for Barcode Scanner or Keyboard . . . . 137
Interfaces (RS-232) 25-pin and 9-pin . . . . . 138
Configuring Serial Ports . . . . . 141
Bluetooth® Interface (COM C, Optional). . . . . 144
Network Interface (Ethernet) . . . . . 146
Data Output . . . . . 151
Data Input . . . . . 156
**Updating the Software**. . . . . 160
**Error and Status Messages**. . . . . 162
**GPL License** . . . . . 163
**Care and Maintenance**. . . . . 164
Packing the Balance for Shipment . . . . . 167
**Disposal** . . . . . 172
**Specifications**. . . . . 173
**Balance Dimensions** . . . . . 186
**Accessories**. . . . . 194
**Declaration of Conformity** . . . . . 196
**EC Type-Approval Certificate**. . . . . 200
**Plates and Markings**. . . . . 201

# Notes on Using this Manual

- ▶ Please read this entire manual carefully and completely before using the device.
- ▶ Read the safety precautions carefully.
- ▶ This manual is part of the product. Keep it in a safe and easily accessible location.
- ▶ If the manual should be lost or misplaced, please contact Sartorius for a replacement or download the latest manual from our website: www.sartorius.com

## Symbols and Signs

The following symbols are used in this manual:

| | |
|---|---|
| ⚠ | **Warning symbol for various types of dangers.** These symbols are explained in more detail in the section on safety precautions. |
| ℹ | This symbol indicates useful information and tips. |
| M | This symbol indicates notes on use of the balance in legal metrology within the scope of validity of Council Directive No. 90/384/EEC, replaced by 2009/23/EC (Models MS...-. CE...). |
| ☝ | The hand symbol indicates operating steps that involve touch screen controls. |
| ( 👤 ) | This symbol means that the USER key should be pressed. |
| ( ☰ ) | This symbol means that the TASK key should be pressed. |
| Next | When individual buttons are displayed, they should be pressed. |

## Explanation of Symbols

The following symbols are used in these instructions:

▶ Indicates a required action

▷ Describes what happens after you have performed a particular step

1., Perform steps in the specified order
2.

– Indicates an item in a list

ℹ **Technical advice / hotline:**
Phone: +49 0551.308.4440
Fax: +49 0551.308.4449

# Safety Precautions

This device complies with European Council Directives as well as international regulations and standards for electrical equipment, electromagnetic compatibility, and the stipulated safety requirements. Improper use or handling can, however, result in damage and/or injury.
This device should only be operated by trained personnel.
Operators must read these installation instructions, particularly the safety information, and must be familiar with the operation of the equipment. The operator is required to supplement these safety precautions as appropriate. The operating personnel must be provided with the appropriate training.
The requirements pertaining to applicable installation regulations must be followed when using electrical equipment in systems and environmental conditions with increased safety requirements. Relevant laws, standards, regulations, guidelines and environmental protection laws valid in your country must be observed.
Always keep the equipment and balance freely accessible. Any installation work or balance operation that does not conform to the instructions will result in forfeiture of all claims under the manufacturer's warranty.

## Danger of Explosion!

Do not use this equipment in hazardous areas in which explosive materials are present.

## Danger of Electrical Shock!

If the device is not used in accordance with the instructions, this can affect the product liability for the device.

Make sure that the voltage rating printed on the AC adapter is identical to your local line voltage. The wall outlet must have a protective grounding conductor. The operating instructions included with the AC adapter must be followed.

Do not switch on the equipment if the AC adapter or power cord are damaged.
If the balance itself, the AC adapter or any cables on the balance are damaged, disconnect the equipment from the power supply and secure it so that it cannot be turned on.

Chemicals (e.g., gases or liquids) that can corrode and damage the inside or outside of the balance, AC adapter, power cable or peripherals must be kept away from the equipment.

Do not operate the balance unless the housing and the display are undamaged and the housing is closed so that inadvertent contact with parts inside the equipment is not possible. Make sure that no liquids penetrate the balance and do not allow conductive parts to touch the balance.

Note on Installation:
The operator shall be solely responsible for any modifications to the equipment and for connecting any cables or equipment not supplied by Sartorius.
Information on operational quality is available upon request from Sartorius.
You should only use peripherals and options supplied by Sartorius.

Protection Class of the Balance Housing
- Models with a readability of >10 mg: These models fulfill the requirements of protection class IP54.
  The IP protection only applies to the balance housing and not to the AC adapter.
- The IP protection is only guaranteed when the weighing pan is mounted.
- The IP protection is restricted if the data interfaces are used. Retain the cover cap for the data output.
  When the data output is not in use, reapply the cover cap to protect it against vapors, moisture, and dust or dirt.

Note on cable quality:
CE conformity is only guaranteed with well shielded cables.
The shielding braid of the cable must be made of metal with at least 80% coverage and also covered with metal foil as much as possible.
The shielding on both sides on the full metal or metalized connector casing, as well as on the casing inlet, must be high-frequency compliant and have a flat design.

You can only turn off power to the device by pulling the plug or disconnecting the power cord, or by unscrewing the four-pin plug at the DC supply cable for the balance.

Do not exert mechanical pressure on the display with sharp objects, as this will damage the display. Liquid penetration can damage the electrical components.

Only use a lightly-moistened cloth for cleaning. See “Care and Maintenance” for cleaning the device. Do not compromise the IP protection of the balance.

Do not open the balance housing. If the seal is broken, this will result in forfeiture of all claims under the manufacturer’s warranty.
The device may only be opened by specialized personnel trained by Sartorius.

Disconnect the balance from the wall outlet prior to moving the device.

Avoid condensation damage to the device. When the balance is turned on, condensation build-up is not possible. If the device is moved from a cool environment to a warm environment, you must allow the device to acclimatize for approx. 2 hours before connecting to the power supply.

## Hazards at the Place of Installation and During Operation

Avoid generating static electricity and establish equipotential bonding.
A 10 kOhm ground is used when connecting the balance to the power supply. Disconnecting the ground conductor is not permitted.

Exercise caution to avoid glass breakage.
There is a danger of lacerations or cuts caused by sharp edges on glass or metal (contact springs), particularly when removing or replacing the glass draft shield panels; during cleaning; if a glass sample container breaks, or when modifying the balance hardware configuration.

Models with a separate electronics module (e. g. MSx6.6/3.6/2.7):.
Do not replace the electronics module.
Replacing with, e. g. models of the ME/SE series will damage the device.

Make sure all equipment operators have received proper instructions when working with hazardous or toxic materials.
Failure to follow correct handling procedures can result in breakage of parts or spillage of liquids or other substances.
Make sure the necessary protective clothing or equipment is worn, such as protective gloves, clothing, eyewear.
All safety regulations applicable in the laboratory must be observed.

Exercise caution to avoid squeezing or crushing fingers when
- Operating the electronic draft shield
- Removing or installing the panels
- Adjusting the display

Do not expose the device to aggressive chemical vapors or to unnecessarily extreme temperatures, moisture, shocks, or vibration.

The device should be set up in areas away from equipment or devices that have strong magnetic properties. Extreme electromagnetic fields from electrical lines should also be avoided.

## Intended Use

Cubis models are high-resolution balances. They were specially developed for exact determination of material mass in liquid, paste, powder or solid form.

Appropriate containers must be used for each type of sample material.
Specific models cover specific weighing ranges: see "Technical Specifications."

Cubis models are designed specially for use in research, education and day-to-day laboratory tasks in science and industry.

They are designed to be used exclusively indoors.

Cubis models can be operated as standalone, connected to a PC, or on a network.

# General View of the Equipment and Equipment Supplied

Balances with a readability of ≤ 1 µg

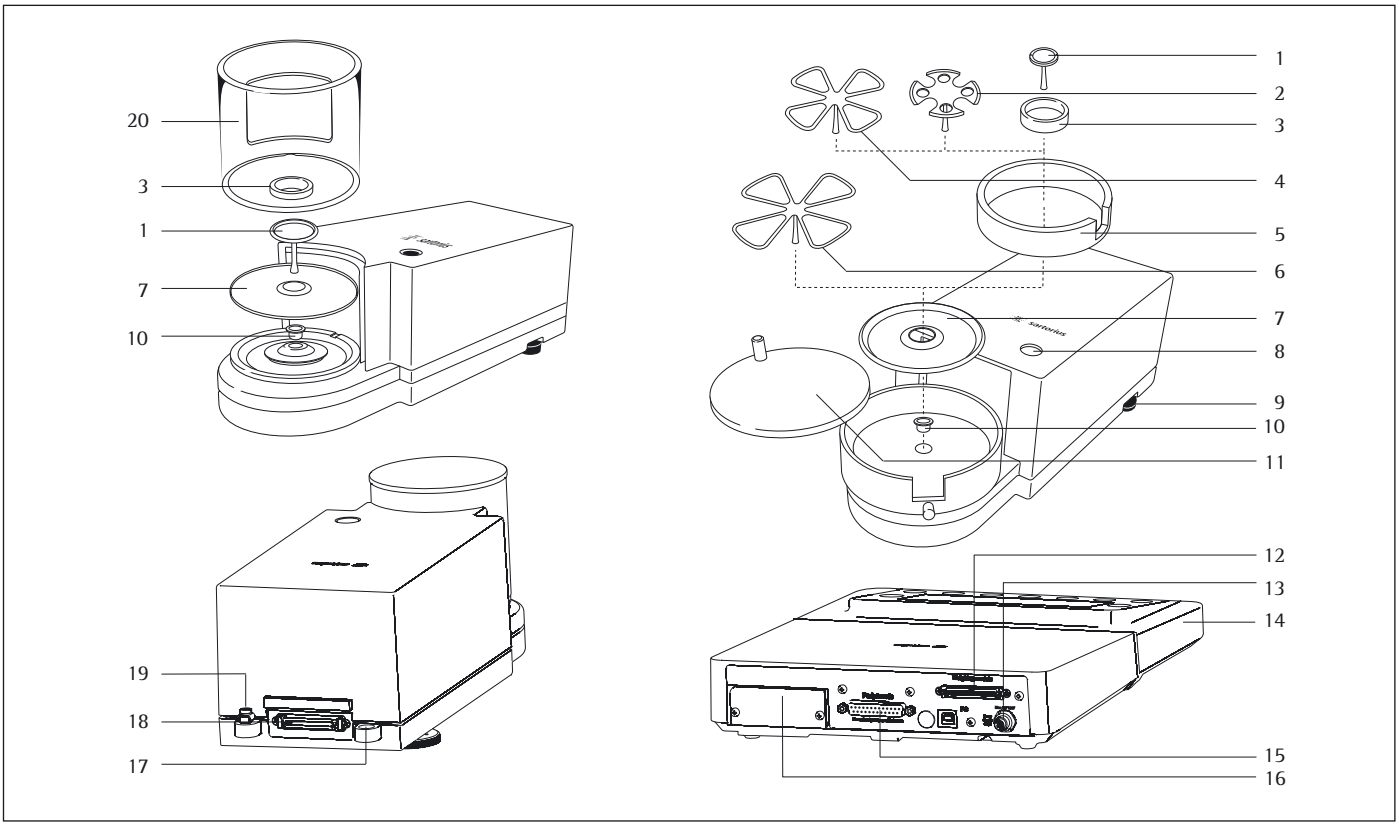


| Pos. | Description |
|---|---|
| 1 | Weighing pan |
| 2 | Filter weighing pan ∅ 50 mm |
| 3 | Internal draft shield (for MSx2.7S-F only) |
| 4 | Optional weighing pan ∅ 75 mm |
| 5 | Shield disk |
| 6 | Optional weighing pan ∅ 90 mm |
| 7 | Shield plate |
| 8 | Level indicator |
| 9 | Leveling foot |
| 10 | MSA2.7..model: bush |
| 11 | Draft shield cover |

| Pos. | Description |
|---|---|
| 12 | Female connector for weigh cell |
| 13 | DC jack |
| 14 | Display and control unit |
| 15 | Serial communications port (PERIPHERALS) |
| 16 | Slot for optional interfaces (e.g., 9-pin data output and PS2 or Bluetooth) |
| 17 | Lug for attaching antitheft locking device |
| 18 | Equipotential bonding conductor terminal |
| 19 | Equipotential bonding conductor terminal |
| 20 | Draft shield |
| | Not shown: AC adapter, USB cable |

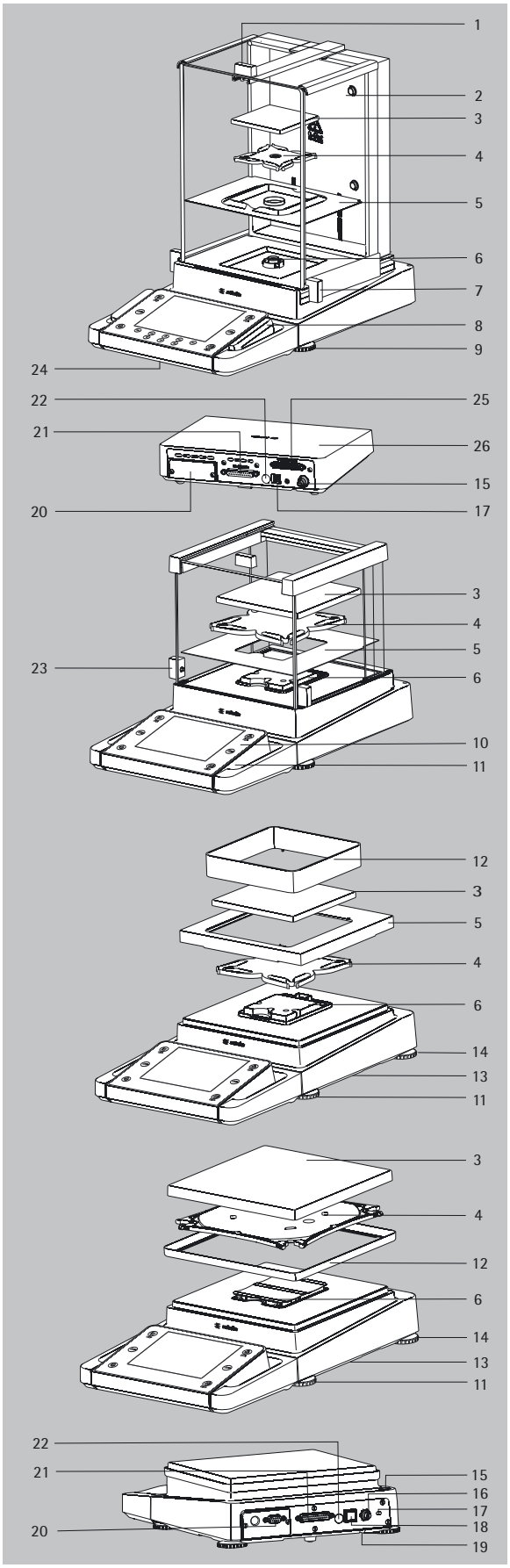


# General View of the Equipment and Equipment Supplied

Analytical and precision balances with a weighing range of up to 15 kg

| Pos. | Description |
|---|---|
| 1 | Upper sliding draft shield panel/Handle |
| 2 | Back panel |
| 3 | Weighing pan |
| 4 | Pan support (not for MSx225.../MSx125... models) |
| 5 | Shield plate |
| 6 | Pan retainer |
| 7 | Right sliding panel/Handle |
| 8 | SD card slot (for MSU, MSA models) |
| 9 | Leveling foot |
| 10 | Display |
| 11 | Display and control unit |
| 12 | Draft shield/Shield disk (only for models with a readability of 1 mg and 10 mg) |
| 13 | Below-balance weighing port (on the bottom of the balance) |
| 14 | Leveling foot |
| 15 | Level indicator |
| 16 | Power socket |
| 17 | Slot for attaching an anti-theft device |
| 18 | USB socket for a PC connection |
| 19 | Below-balance weighing hook |
| 20 | Slot for optional interfaces, e.g., 9-pin data output and PS2 (as shown) or Bluetooth |
| 21 | Communication port (PERIPHERALS) for accessories |
| 22 | Menu access switch |
| 23 | Left sliding panel/handle |
| 24 | Ethernet Interface (on the bottom of the display and control unit) |
| 25 | Semi-microbalances: Female connector for weigh cell |
| 26 | Semi-microbalances: Electronics module (for MSx225.../MSx125... models) |

Not shown:

- AC adapter
- USB cable
- Operating instructions

# General View of the Equipment and Equipment Supplied

**Balances with a weighing range of 20 kg or more**

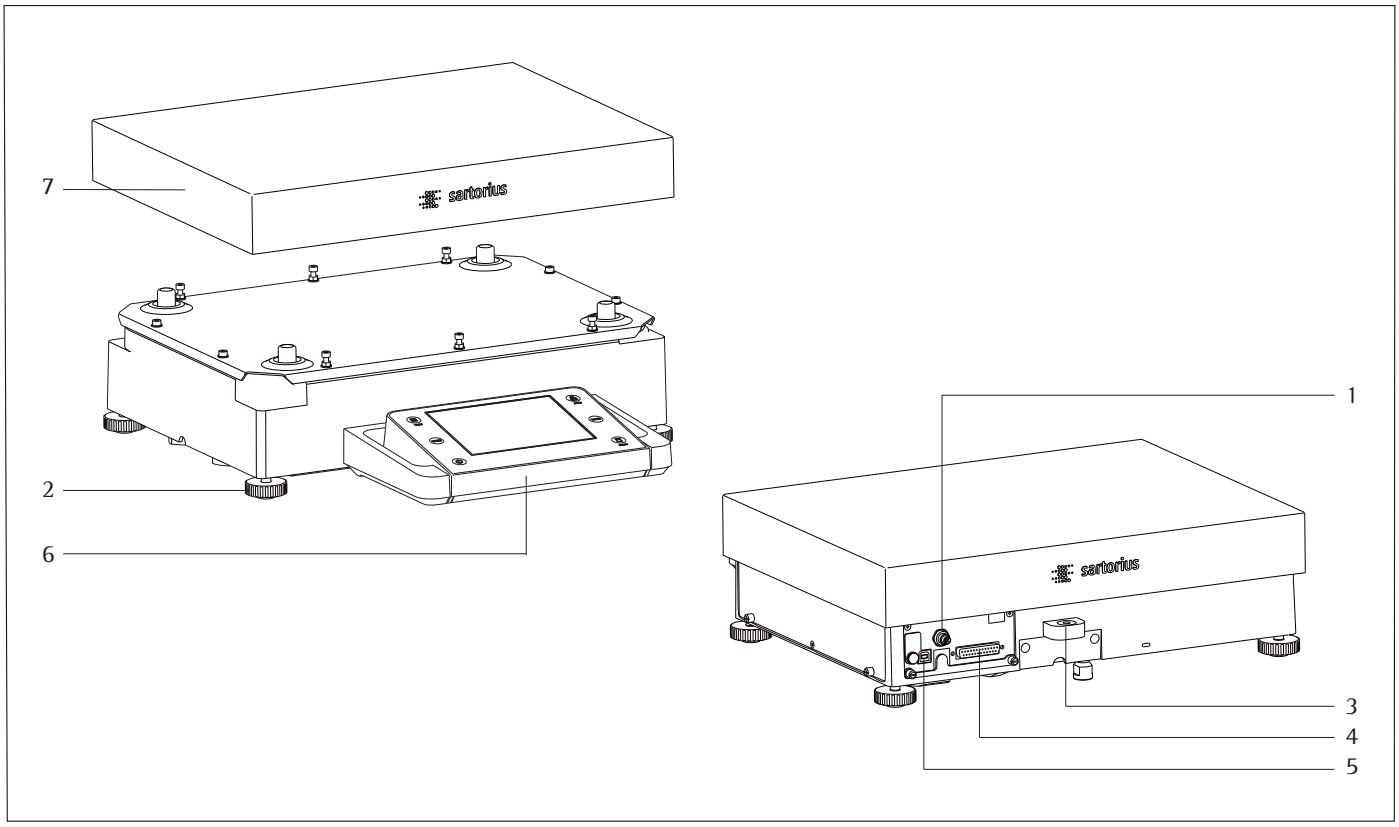


| Pos. | Description |
|---|---|
| 1 | DC jack |
| 2 | Leveling foot |
| 3 | Level indicator |
| 4 | Serial communications port (PERIPHERALS) |

| Pos. | Description |
|---|---|
| 5 | USB socket for a PC connection |
| 6 | Display and control unit |
| 7 | Weighing pan |

Not shown: AC adapter, USB cable

# Getting Started

## Unpacking the Equipment

- Open the packaging at the top.

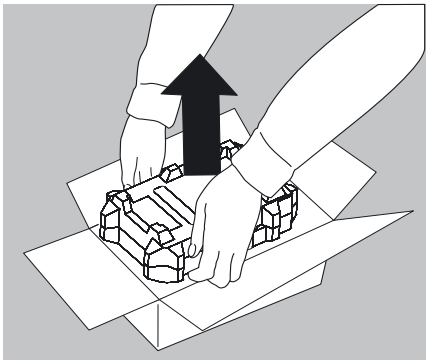

- Use both hands to lift the balance, with the packaging, out of the cardboard box.

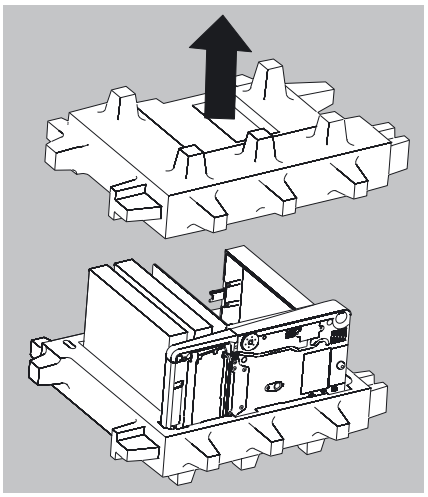

- Place the packaging with the balance on the floor.
- Remove the top part of the packaging.

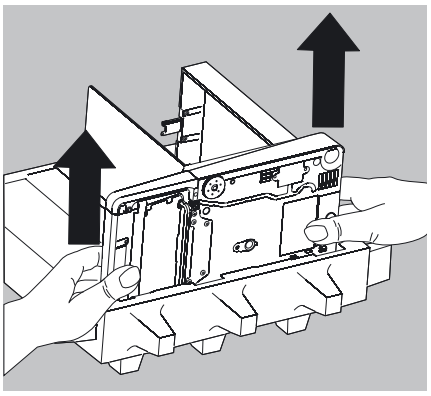

**Balance with Draft Shield**

▶ Remove the packages (containing draft shield panels, weighing pan, pan support, AC adapter, etc.) from the lower packaging and place them to one side.

▶ Use both hands to lift the balance out of the packaging.

---

⚠ Exercise caution to avoid glass breakage.
Never lift the equipment by the draft shield panels to remove it from the packaging.

---

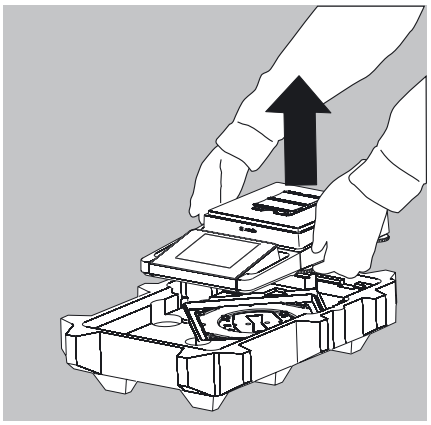

▶ Place the balance on an even surface.

**Balance with No Draft Shield**

▶ Use both hands to remove the model without a draft shield from the packaging.

▶ Remove the AC adapter and the balance parts from the packaging.

## Assembly

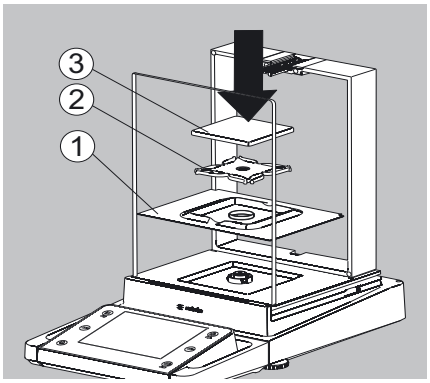


**Installing the Analytical Draft Shield Labeled DA, DI, and DU, Assembling the Balance**

▶ Fit parts onto the balance as shown in the picture.

1. Shield plate
2. Pan support (not for MSx225.../MSx125... models)
3. Weighing pan

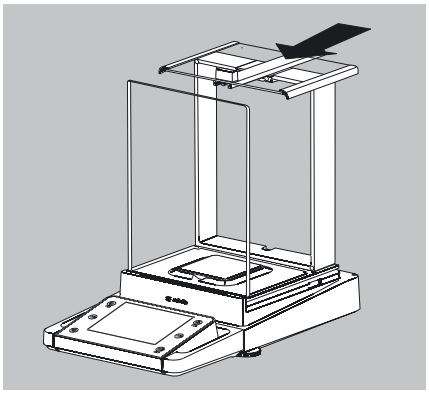

▶ Slide the upper draft shield panel into the guide rails from the rear.

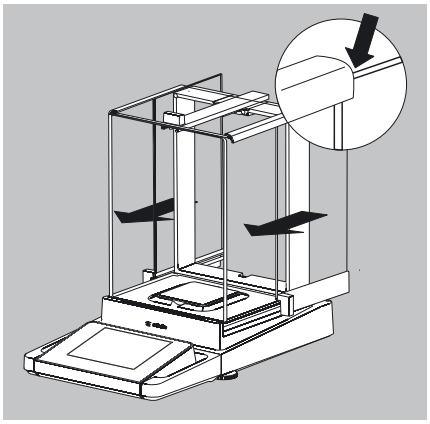

▶ Slide the left and right draft shield panels into the guide rails from the rear. Make sure the panels are within the upper and lower guide rails.

▶ Slide the panels in until they engage.

1. Right draft shield panel
2. Left draft shield panel

▷ This completes the balance assembly.

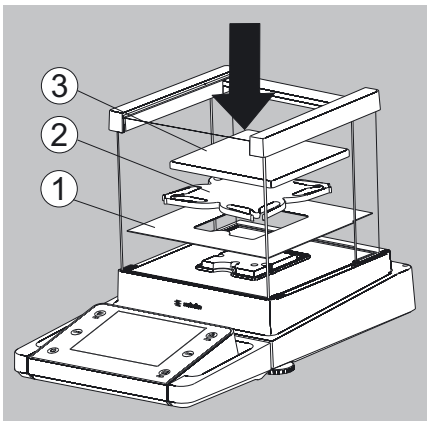


**Installing the Draft Shield Labeled DE for Milligram Balances, Assembling the Balance**

▶ Fit parts onto the balance as shown in the picture.

1. Shield plate
2. Pan support
3. Weighing pan

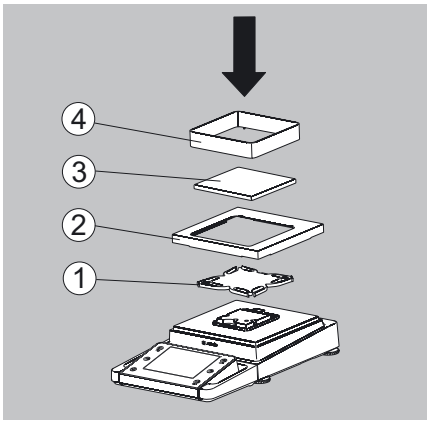


**Assembly of Milligram Balances without Glass Draft Shield (DR option), Assembling the Balance**

▶ Fit all components listed below onto the balance in the order given:

1. Pan support (see also next section)
2. Shield plate
3. Weighing pan
4. Draft shield frame

▶ First insert the shield plate.

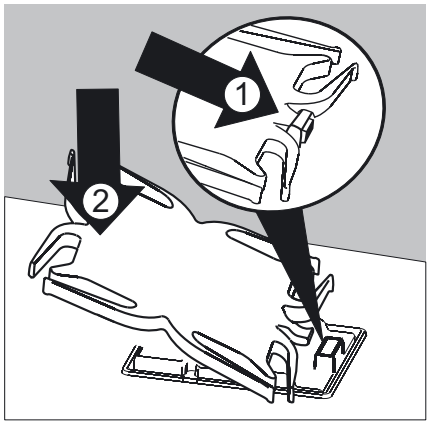


▶ Make sure the pin on the pan support is facing toward the front, and slide it under the clip on the pan retainer.

1. Insert the pan support.

▶ After inserting the pan support, press it down against the shield plate so that it lies flat.

2. Press down the pan support.

---

⚠ Exercise caution to avoid pinching or crushing fingers.

---

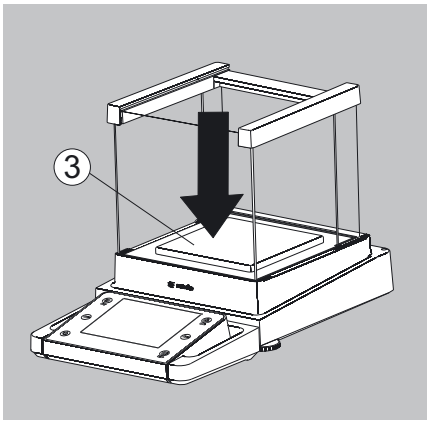


▶ Place the weighing pan on the pan support.

3. Weighing pan

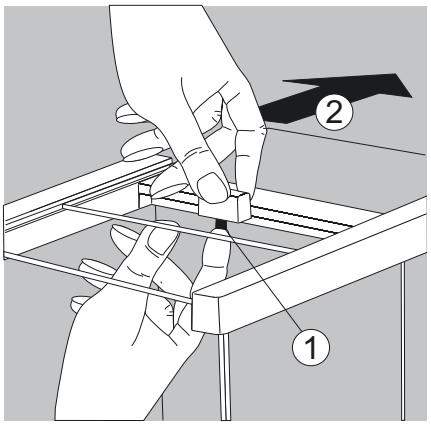


▶ Slide the upper draft shield panel into the guide rails from the rear while pressing the locking tab.

▶ Slide the left and right draft shield panels into the guide rails from the rear while pressing the locking tab.

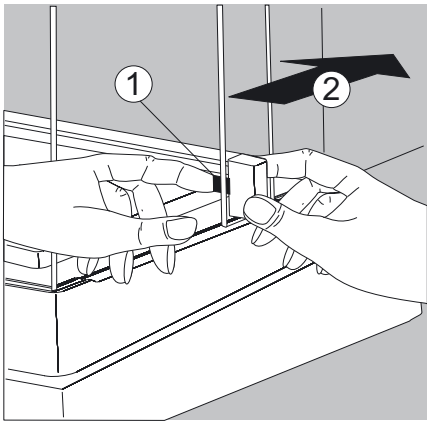


▷ This completes the balance assembly.

▶ If it becomes necessary to remove a panel:

1. Press on the locking tab.
2. Remove the panel

▶ Place the panel in the storage slot at the back of the balance.

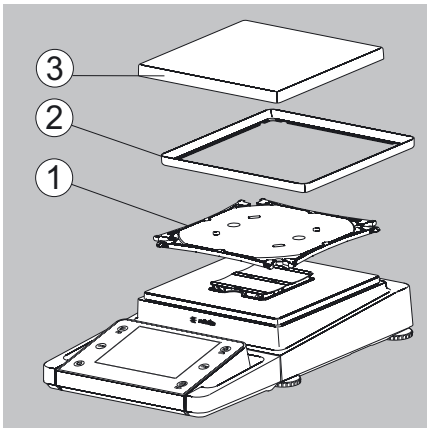


**Assembling Precision Balances without a Draft Shield and with a Weighing Range of up to 15 kg**

▶ Carefully fit all parts onto the balance.

1. Pan support
2. Shield plate/Draft shield
3. Weighing pan

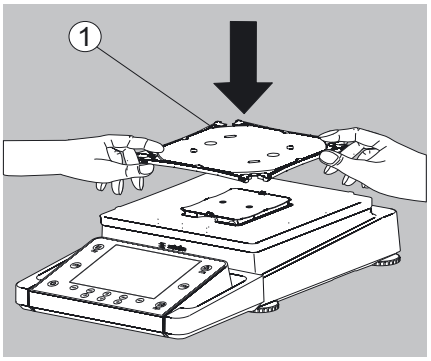


▶ Position the pan support diagonally and press down lightly.

1. Pan support

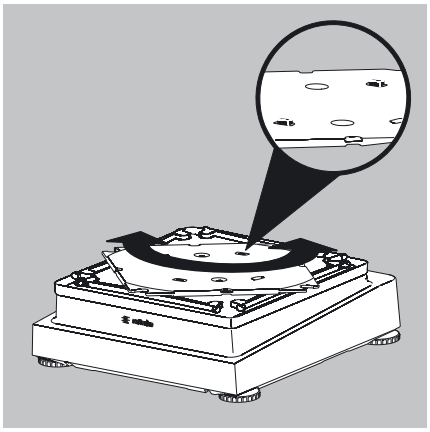

▶ Carefully turn the pan support clockwise until the two buttons engage. The pan support is now attached.

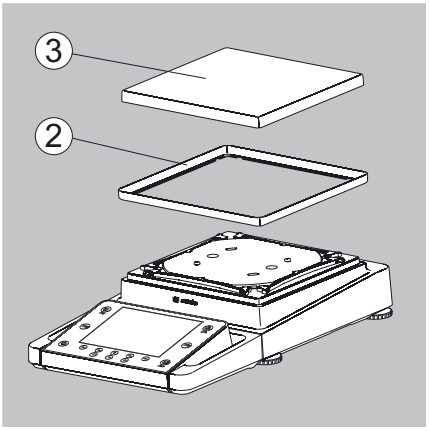


▶ **2.** Insert the shield plate/draft shield.

▶ **3.** Place the weighing pan on the pan support.

▷ This completes the balance assembly.

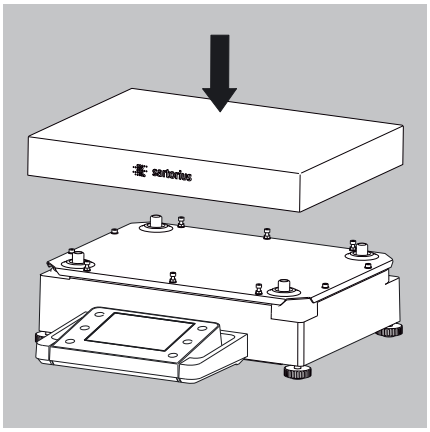

Models with a weighing range of 15 kg or more:

▶ Place the weighing pan on the balance.

MSx225..., MSx125:

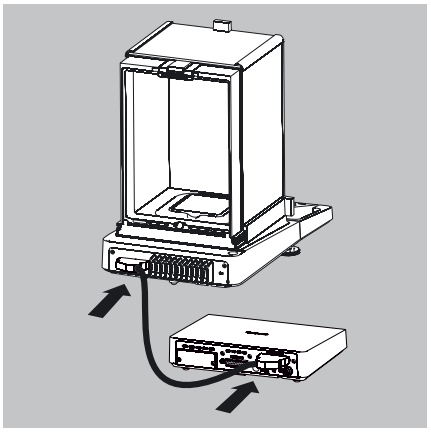

**Connecting the Weigh Cell to the Electronics Module/Evaluation Unit**

▶ Connect the weigh cell and electronics module using the connection cable: Make sure that the connectors click into place so that both ends are locked in properly.

⚠ Please check the plug contacts to ensure a proper connection. There should be no tension on the connection cable, e.g., if pushed directly against a wall.

MSx6.6S/3.6P/2.7S:

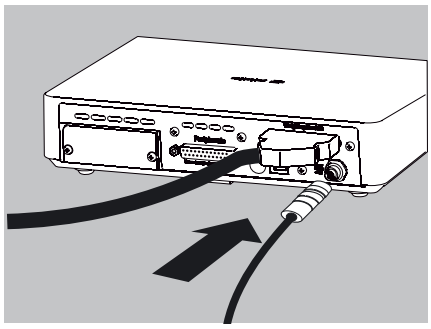

▶ Connect the weigh cell to the evaluation unit:
Make sure that the connector clicks into place so that the connection is locked in properly.

⚠ Models with a separate electronics module (e.g., MSx6.6/3.6/2.7, MSx225S/P, and MSx125P): Do not replace the electronics module. Replacing with models from the ME/SE series, for example, will damage the device.

MSx6.6S/3.6P/2.7S:

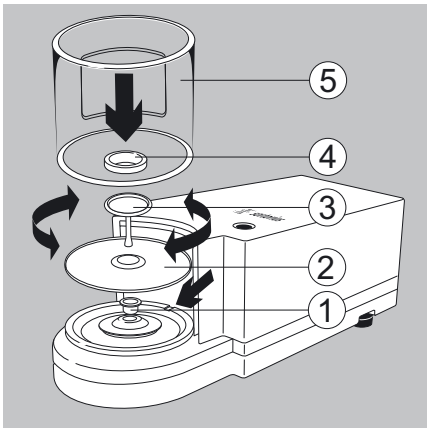


**Microbalances (Models MSx6.6S/3.6P/2.7S): Placing Components on the Weigh Cell**

▶ Install the following components in the order listed:

1. MSA2.7S model: bush
2. Shield plate
3. Weighing pan
   Note: After inserting the weighing pan, turn it slightly to the left and right, while pressing down lightly.
4. Internal draft shield (for MSx2.7S only)
5. Draft shield: Center the hole over the pan (see arrows)

MSx6.6S-F/2.7S-F:

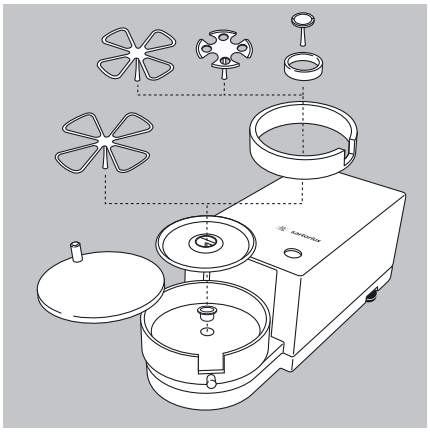

**Filter Balances (Models MSx6.6S-F/2.7S-F): Placing Components on the Weigh Cell**

▶ Place the components listed below on the weigh cell in the order given:

- MSA2.7S model: bush
- Shield plate
- Internal draft shield
- Filter weighing pan ∅ 50 mm or weighing pan
  (optional filter weighing pan ∅ 75 mm or ∅ 90 mm)
  Note: After inserting the pan, turn it slightly to the left and right, while pressing down lightly.
- Draft shield cover

⚠ Tip: Turn the balance off and then on again after replacing the pan during operation.

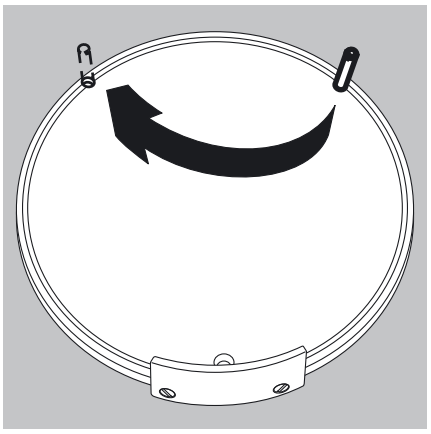

**Setting Up a Filter Balance for Left-Handed Users:**

▶ Remove the draft shield cover

▶ Unscrew the pin and move from the right to the left side

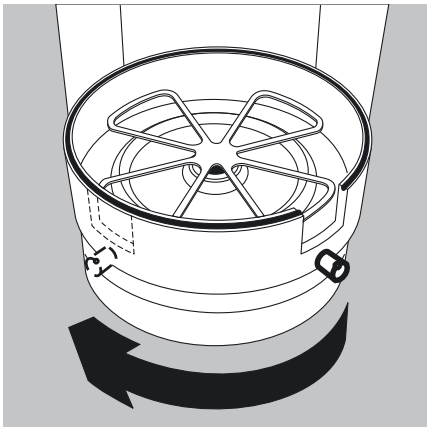

▶ Turn draft shield parts approx. 90 degrees to the left (loosen knurled screw)

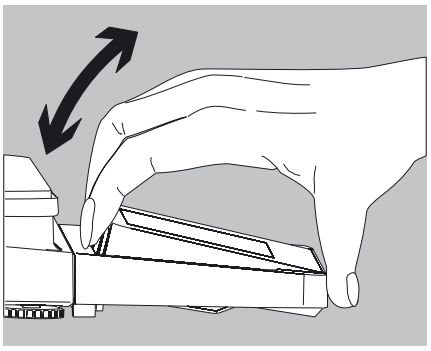

**Setting the Angle for the Display and Control Unit**
The angle of the display and control unit can be adjusted by the user, in order to ensure optimal readability of the weight values on the display at all times.

▶ On MSA and MSU models, the display and control unit can be tilted as desired.

## Installation Instructions

▶ Select the proper setup location:
- Set up the device on a stable, even surface that is not exposed to vibrations (e.g., weighing stone).
- Place the device in a location with enough free space around it so that excessive heat cannot build up.
- Maintain free access to the device at all times.

Choose a location that is not subject to the following negative influences:
- Heat (heater or direct sunlight)
- Drafts from open windows, AC systems and doors
- Extreme vibrations during weighing
- Excessive moisture

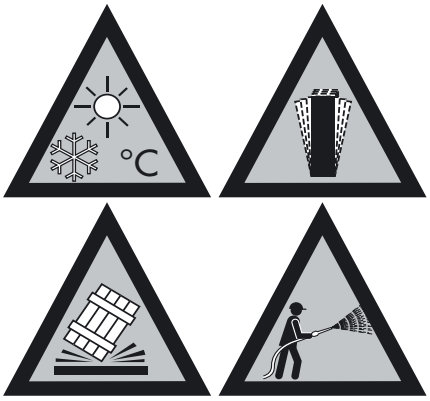


**Acclimatization**
Condensation from humidity can form on the surfaces of a cold device when it is brought into a substantially warmer area.
To avoid the effects of condensation, condition the balance for about two hours at room temperature, leaving it unplugged from the power supply.
Carefully read all warnings and safety precautions in the respective section of this manual.

## Power Cord Receptacle

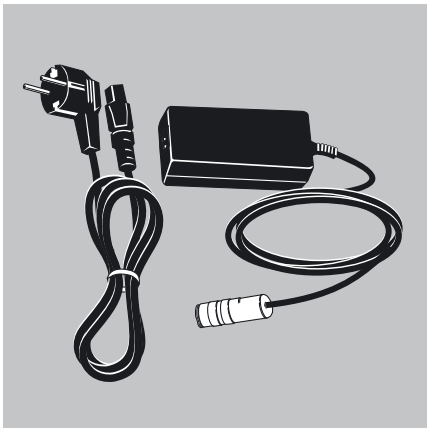

▶ Check the voltage rating and plug design.

- Make sure that the voltage rating printed on the manufacturer's ID label is identical to that of your local line voltage.
- If the stated supply voltage or the plug design of the power cord does not comply with your country's standard, please inform the nearest Sartorius representative or your dealer.
- The power connection must be made in accordance with the regulations applicable in your country.
- In order to connect the equipment to the power supply (protection class 1), use a correctly installed wall outlet with a protective grounding conductor (PE) and a fuse of maximum 16 A.
- Only use original Sartorius AC adapters.

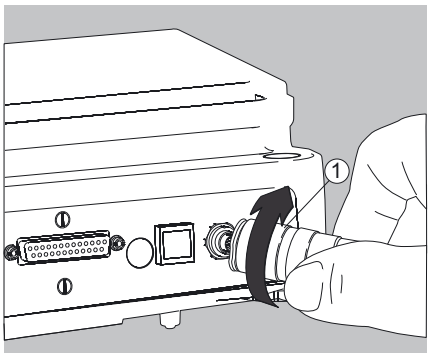


Analytical and precision balances:

1. Plug the DC supply cable of the AC adapter into the power socket of the balance and tighten the threaded fitting.

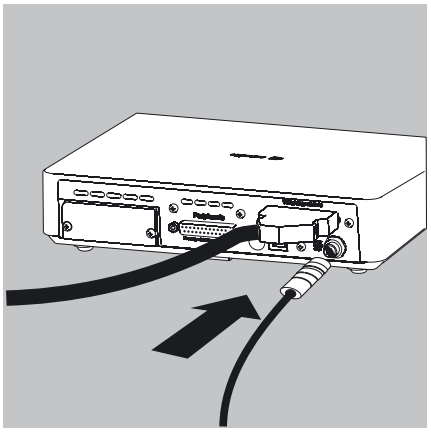

Balances with a readability of ≤ 0.01 mg

1. Plug the DC supply cable of the AC adapter into the power socket of the electronics module and tighten the threaded fitting.

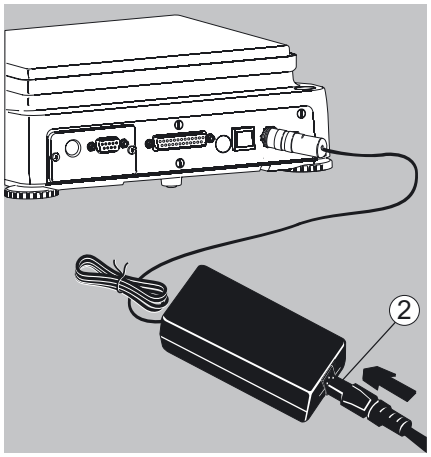


2. Plug the other end of the power cord into the AC adapter.

3. Insert the AC adapter power plug into the wall outlet.

▷ The balance is now ready to use.

**Safety Precautions**

The output line of the adapter has a terminal (GND) connected to the metal housing of the balance. The data port is also galvanically linked to the balance housing (GND).

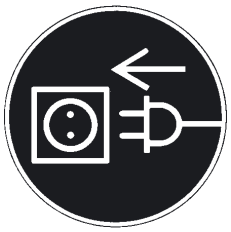

**Connecting Electronic Devices (Peripherals)**

▶ Make absolutely sure that the device is unplugged from the power supply before connecting/disconnecting any peripheral device (printer, scanner, PC) to or from the data port.

⚠ A device connected to the power supply should never be opened.

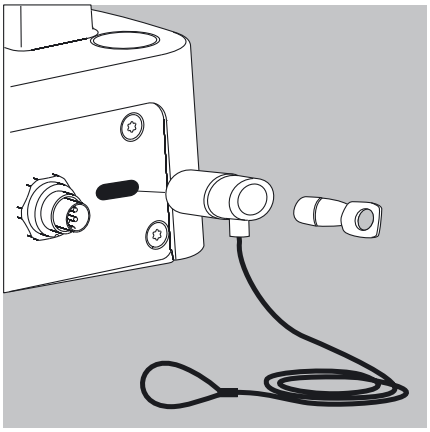

## Anti-theft Locking Device (Accessory)

Balances with a readability of ≤ 0.01 mg

▶ An anti-theft locking device can be installed on the back of the balance if required.

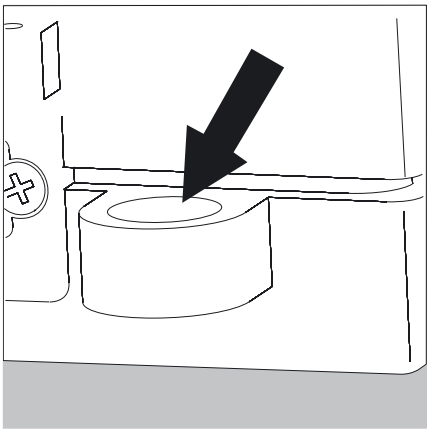

Balances with a readability of ≤ 1 µg

To fasten an antitheft locking device, use the lug located on the back of the weigh cell.

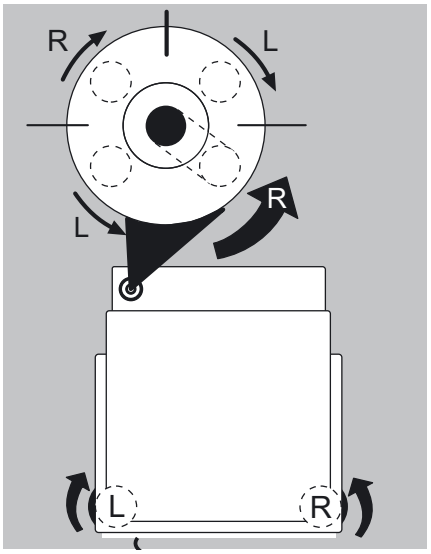


## Leveling the Balance, Setting the Level Indicator

Leveling the balance compensates for slant or unevenness at the place of installation. The balance must be perfectly horizontal to ensure consistent, reproducible weighing results. All models are equipped with an electronic tilt angle detection feature. If the balance is not level, all balance models issue an alert on the display.
Push-button automatic leveling is available on models with motorized leveling feet. For models with manual leveling feet, please follow the instructions on the display.

### Leveling the Balance Manually

- ▶ The balance is leveled using both front leveling feet.
- ▶ Screw in both back leveling feet (only for models with back leveling feet).
- ▶ Turn the two front leveling feet as shown in the illustration until the air bubble is centered within the circle of the level indicator.
- ▷ Normally, several leveling attempts are required.

- ▶ Unscrew both back leveling feet until they touch the setup surface (only for models with back leveling feet).

### Switching On

- ▶ Turn on device via the ( ⏻ ) key. The following appears on the display:

- ▷ You can now follow the brief instructions to configure balance settings before beginning weighing operations.

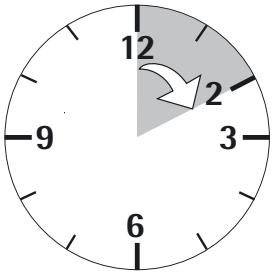


### Warm-up Time

- ▷ To deliver precise results, the balance must warm up for at least 30 minutes after initial connection to the power supply. Only after this time will the device have reached the required operating temperature.

M

When a verified balance used in legal metrology (legal-for-trade applications) is connected to the power, it must warm up for at least two hours before operation.

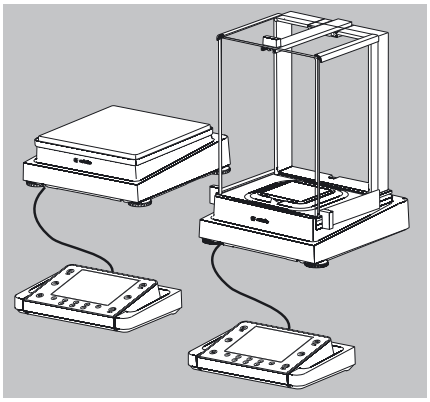

## Modifying the Balance

### Setting Up the Display and Control Unit at the Place of Use

The display and control unit can be removed for all models to enable the operator to customize the work space.

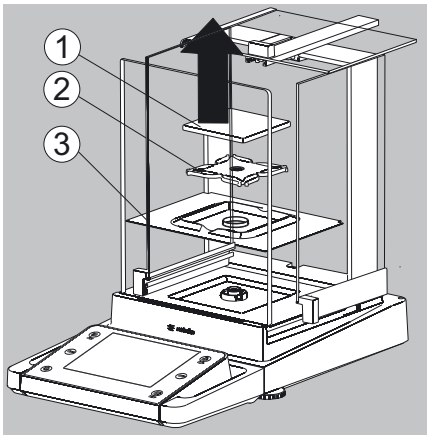


### Removing the Retainer with the Display and Control Unit

▶ Remove all items (such as weights) from the draft shield.

▶ Carefully remove all parts as shown in the illustration.

1. Weighing pan
2. Pan support (not for MSx225.../MSx125... models)
3. Shield plate/Draft shield

▶ Keep all parts in a safe place.

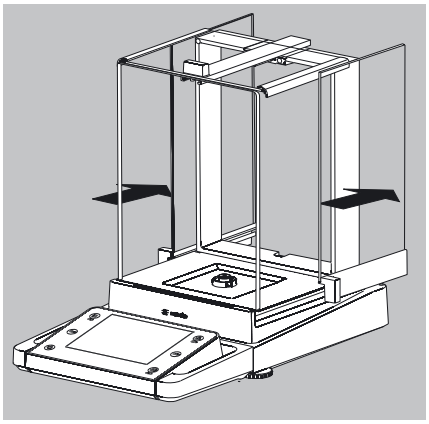

▶ Remove the panels (right and left).

Models with the analytical draft shield:
1. Press on the locking tab.
2. Remove the panel.

Models with the milligram draft shield:
1. Press on the locking tab.
2. Remove the panel.

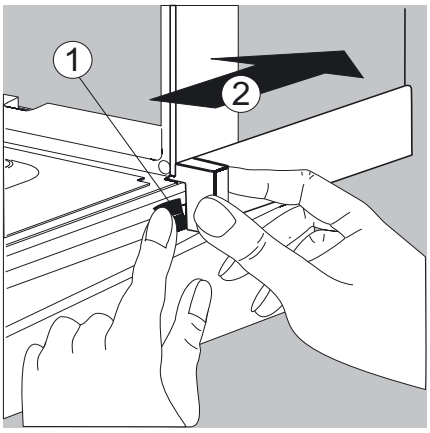


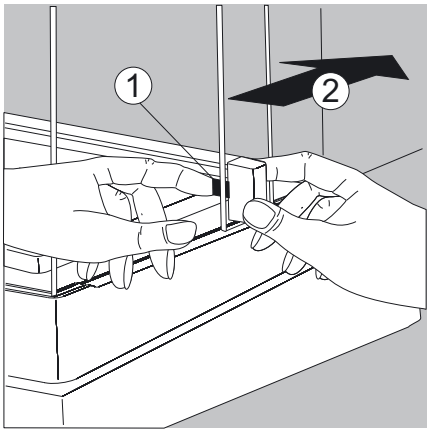


▶ Keep all parts in a safe place.

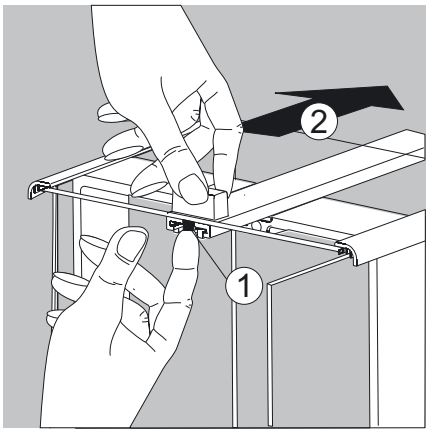


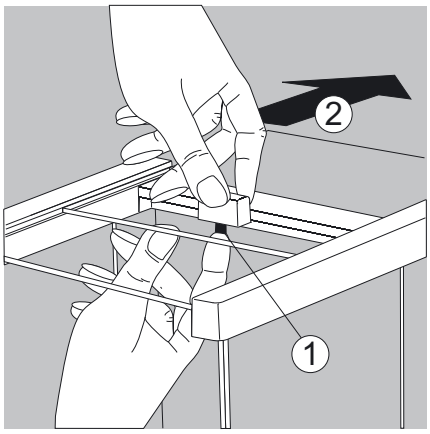


▶ Remove the upper draft shield panel.

Models with the analytical draft shield (left illustration).
1. Press on the locking tab.
2. Remove the panel.

Models with the milligram draft shield (right illustration):
1. Press on the locking tab.
2. Remove the panel.

▶ Keep all parts in a safe place.

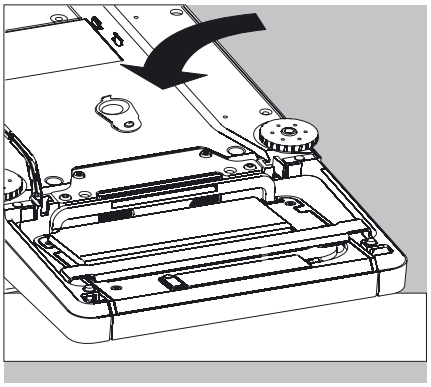

▶ Turn over the balance and place it on a soft surface.

⚠ Exercise caution to avoid breaking the glass on models with a draft shield.

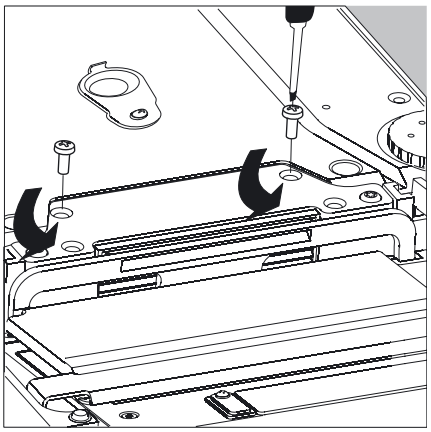

▶ Use a 2.5 mm Allen wrench to remove the two screws from the display and control unit retainer bracket.

▶ Remove the display and re-insert both screws back into their holes.

▶ Lengthen the cable and position the display and control unit as desired.

▶ Turn the balance over again and place it on an even surface.

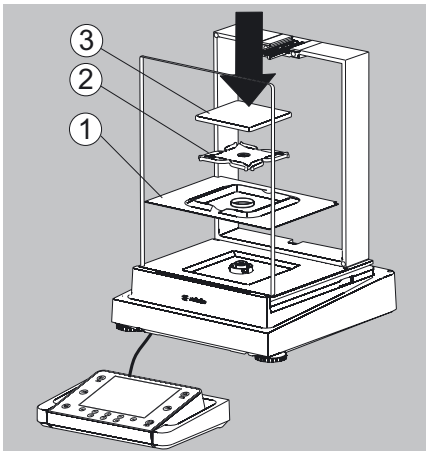


▶ Carefully place all parts on the balance.
1. Shield plate/Draft shield
2. Pan support (not for MSx225.../MSx125... models)
3. Weighing pan

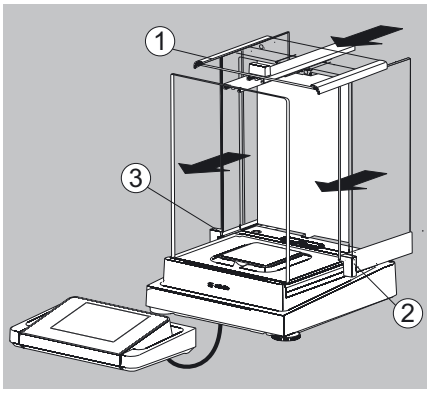


▶ Replace the upper and side shield panel.

1. Upper draft shield panel
2. Right draft shield panel
3. Left draft shield panel

**Removing the Display and Control Unit from Precision Balances with a Weighing Range of up to 15 kg**

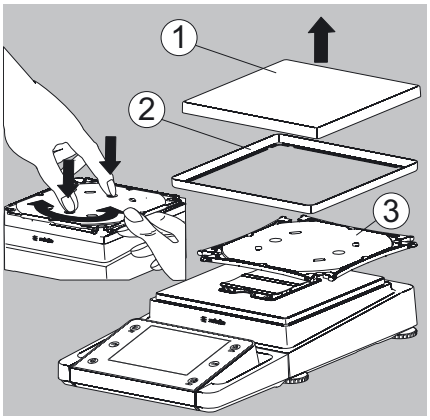


▶ Carefully remove all parts as shown in the illustration.

1. Weighing pan
2. Shield plate/Draft shield
3. Pan support

▶ Keep all parts in a safe place.

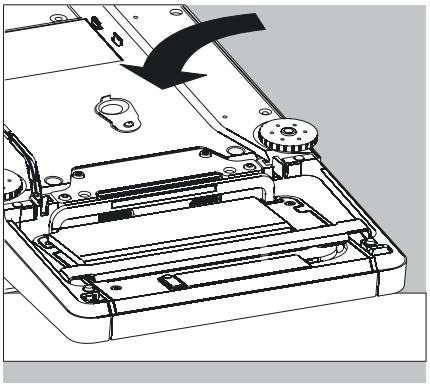

▶ Turn over the balance and place it on a soft surface.

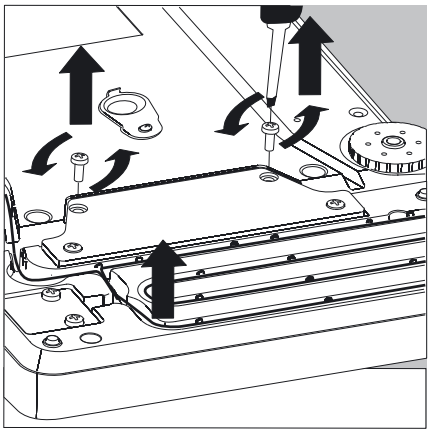

▶ Remove the two retaining screws.

▶ Remove the display and re-insert both screws back into their holes.

▶ Carefully pull the cable connected between the display and control unit from the retainer.

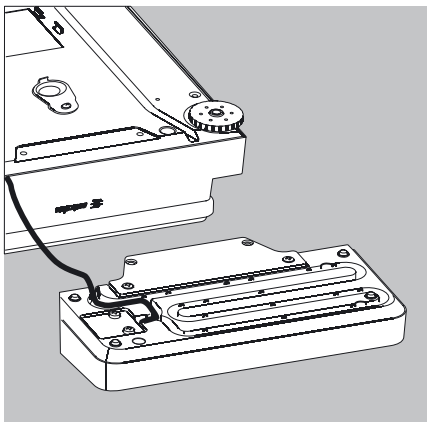

▶ Determine the required cable length.

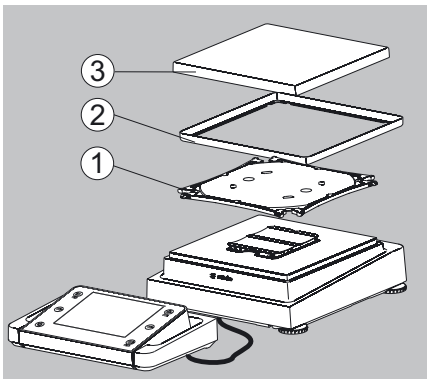


▶ Return the balance to an upright position and fit the parts onto the balance.

1. Attach the pan support.
2. Shield plate (only for models with a readability of 10 mg)
3. Weighing pan

▶ Level the balance.

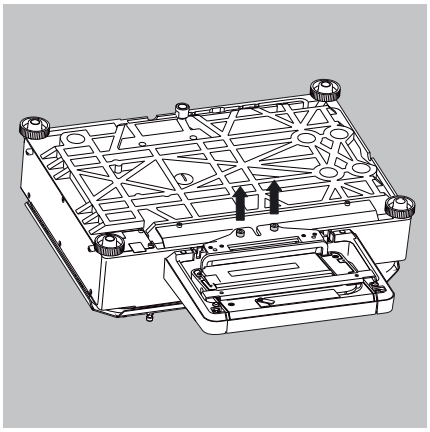

**Removing the Display and Control Unit from Models with a Weighing Range of 20 kg or more**

Remove the weighing pan before unscrewing the control unit, so that the weighing pan does not fall and cause injury.

▶ Turn over the balance so that the pan side is facing down.
▶ Remove the two fixing screws using a screwdriver.
▶ Remove the control unit and re-insert both screws into their holes.
▶ Carefully remove the connection cable from its holder.
▷ Long connection cables should only be installed by a Sartorius technician.

**Semi-microbalances: Attaching the Display and Control Unit to the Electronics Module (MSx225.../MSx125... models)**

The display and control unit can also be attached to the electronics module if required for operation.

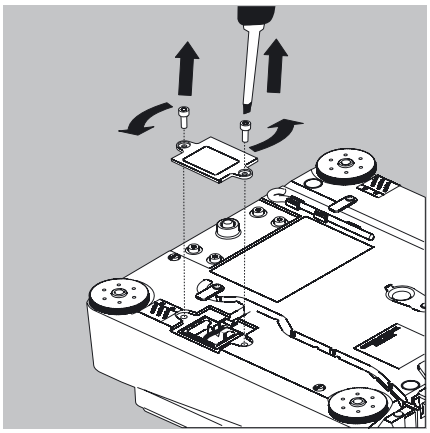

▶ Turn over the balance and place it on a soft surface.

Remove the connection cable from the cable channel:

▶ Remove two screws from beneath the weigh cell and detach the plate.

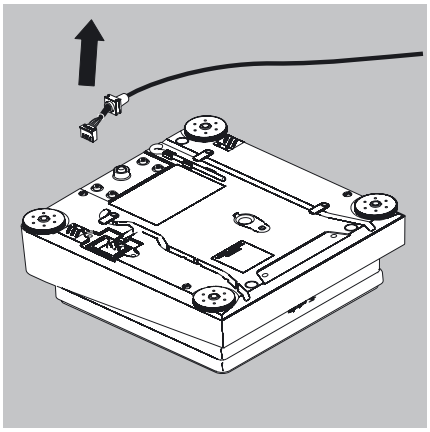

▶ Remove the connection cable plug.

▶ Then reattach the plate to the slot.

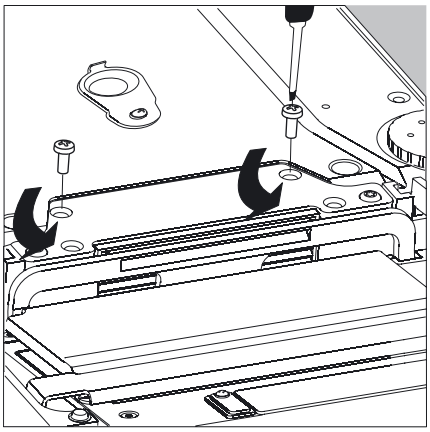

▶ Remove the display and control unit from the weigh cell:
Remove two retaining screws.

▶ Remove the display and control unit.

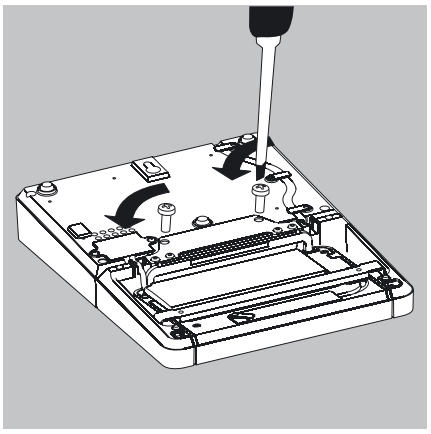

▶ Attach the display and control unit to the electronics module:
Reattach the two retaining screws.

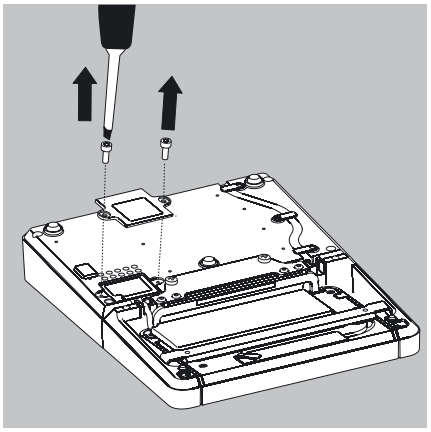

Open the slot for the connection cable on the electronics module:
▶ Remove the screws from beneath the electronics module and detach the plate.

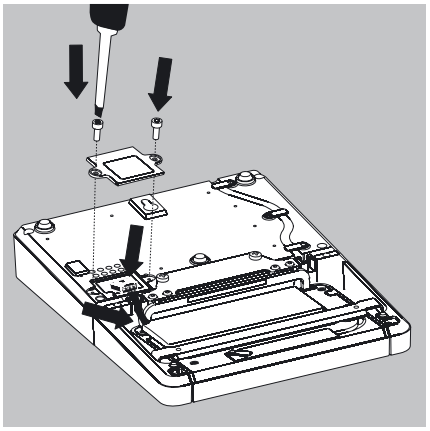

Connect the display and control unit to the electronics module:
▶ Plug in the connection cable.

▶ Then reattach the plate to the slot.

▶ Slide plate cable that sticks out into the cable channel.

## Preparing Below-Balance Weighing

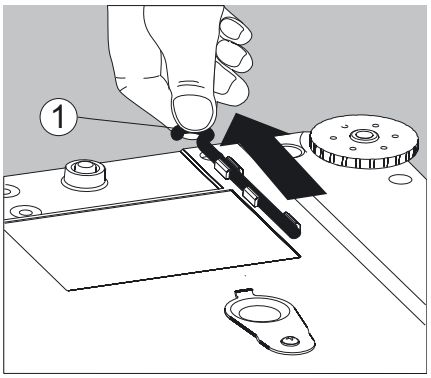


A port for a below-balance weighing hook is located on the bottom of the balance.

M The below-balance weighing port must not be opened or used on balances used for legal metrology.

**Analytical and Precision Balances with a Weighing Range of up to 15 kg:**

1. Remove the hook for below-balance weighing from the clip on the bottom of the balance.

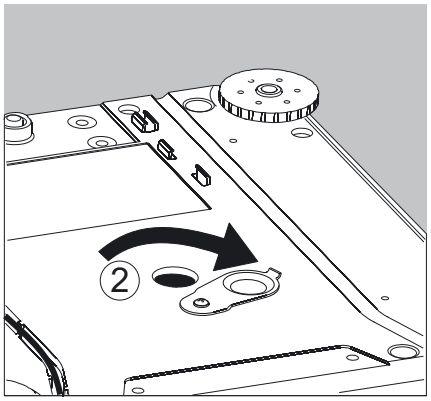


**2.** Push the cover of the below-balance weighing port to one side.

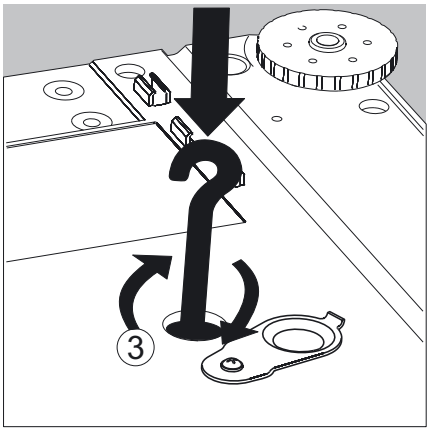


**3.** Carefully screw on the below-balance weighing hook.

Do not screw it in too tightly,as this could damage the thread or the balance.

Install a draft protection shield.

▶ Attach the sample (e.g., using a suspension wire) to the hook.

**4** When weighing has been completed, unscrew the hook and return it to the clip.

▶ Close the cover of the below-balance weighing port.

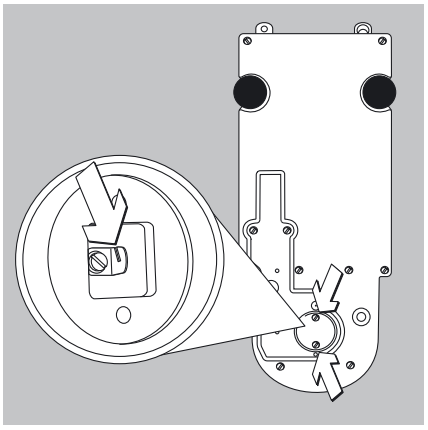

**Balances with a Readability of ≤ 1 µg:**

▶ Remove both screws from beneath the weigh cell and detach the cover plate.

▶ Attach a wire, for example, to the sample and hang it on the notched hook.

Install a draft protection shield.

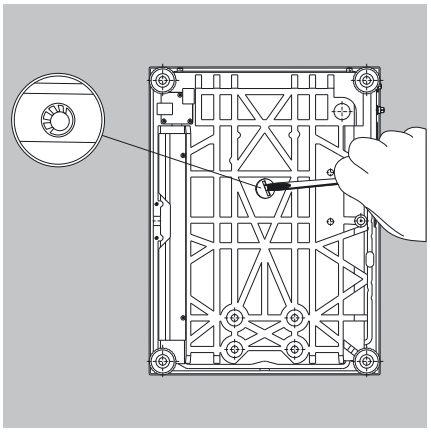

**Balances with a Weighing Range of 20 kg or more:**

▶ Use a suitable screwdriver to unscrew the cover plate from the bottom of the balance.

▶ Request the hook directly from Sartorius.

Install a draft protection shield.

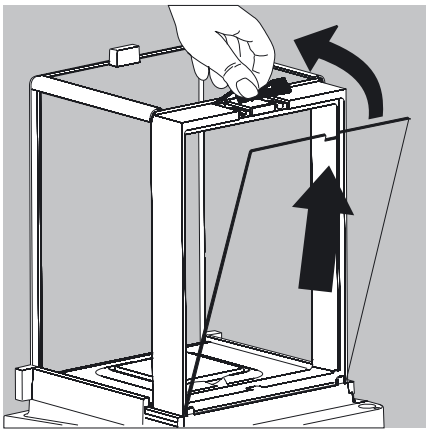

## Using the Cable Opening of the Draft Shield

Models with an analytical draft shield have an opening for passing a cable (for example, for a temperature sensor) through to the interior of the weighing chamber.

1. Lift the locking tab on the rear panel of the analytical draft shield.
2. Lift the panel out of the draft shield.

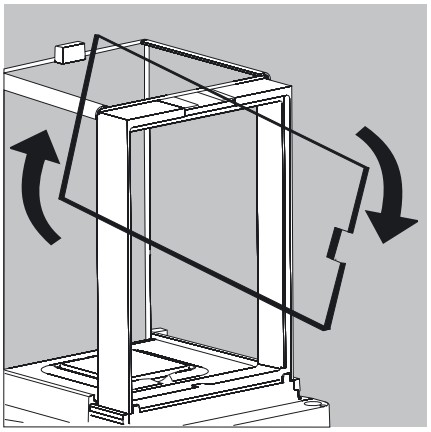

▶ Turn the panel clockwise 180° so that the opening is at the bottom.

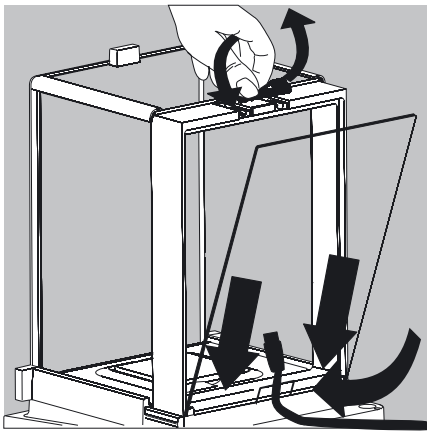

▶ Install the desired sensor.

▶ Insert the panel in the guide rail.

▶ Lift the locking tab and gently press the panel into position.

▶ Press the locking tab down and close it.

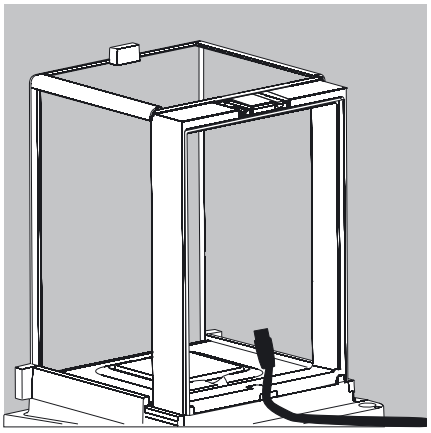

▶ You can now begin weighing.

# Moving the Balance

**Transporting the Device over Short Distances**

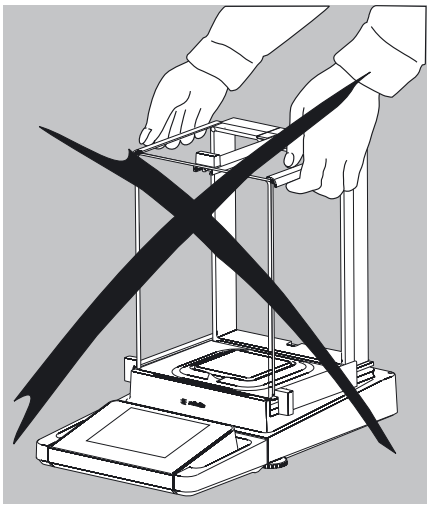

Exercise caution to avoid glass breakage.
Never lift and carry the balance by its draft shield.

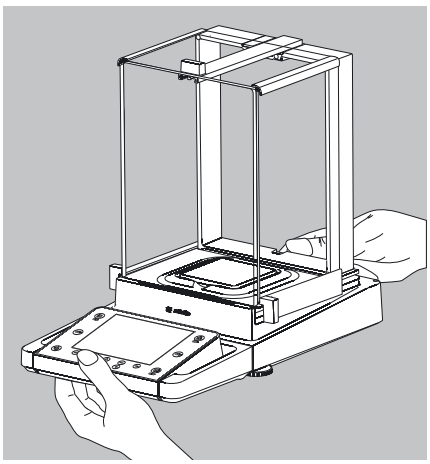

▶ Carry as shown in the first illustration.

or

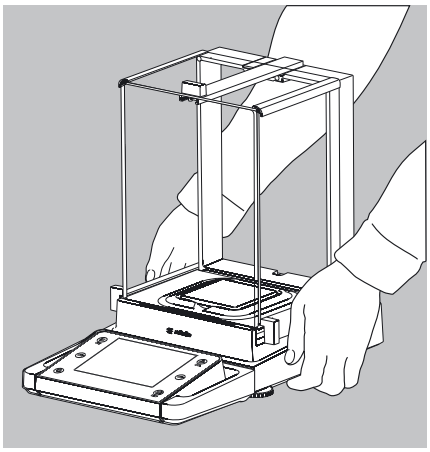

▶ Carry as shown in the second illustration.

**Storage and Shipping Conditions**

- Permitted storage and shipping temperature: -10 to +60 °C
- Unpacked devices can lose their precision if subject to extreme vibrations.
- Excessive vibrations may compromise the safety of the equipment.

Save the packaging for any future storage or shipment of the balance.
Only the original packaging provides optimum protection for the equipment.

- Follow all warnings and safety precautions.
- Follow the instructions in the chapter: “Transporting the Balance.”

# Using the Balance

## Turning the Balance On/Off

- ▶ Make sure the balance has been installed and put into operation in accordance with the installation instructions.
- ( ⏻ ) ▶ Press the on/off key ( ⏻ ) on the control unit.
- ▷ The start screen appears briefly on the display, then the user interface appears.

On subsequent starts, the most recently active user profile and task are opened (if at least one user profile and task have been set up).

- ▶ If prompted, level the balance (see “Leveling the Balance” for details).
- ( ⏻ ) ▶ To put the balance in standby mode or switch it off, press the key ( ⏻ ).
- ▶ Close the draft shield (if your model has one).

## Operating Concept: Q-Guide

The Cubis precision and analytical balances are controlled by application software with interactive operator guidance. Once you open a menu or select an application, brief instructions shown on the display will guide you through the menu or application step-by-step. At each step along the way, the display shows only those options that are relevant to your process; this helps prevent unnecessary “detours” and enables you to reach your destination more quickly.
This type of user guidance is mostly intuitive. Although operation of the balance is also mostly intuitive, this manual includes a section with very detailed, step-by-step instructions where you can learn about all of the available options (see “Creating User Profiles” in the chapter “User Management”).

### Basic Operational Structure

The most basic functions, weighing and taring, can be carried out as soon as the balance is switched on. The application software is divided into three general areas in which individual settings can be configured:

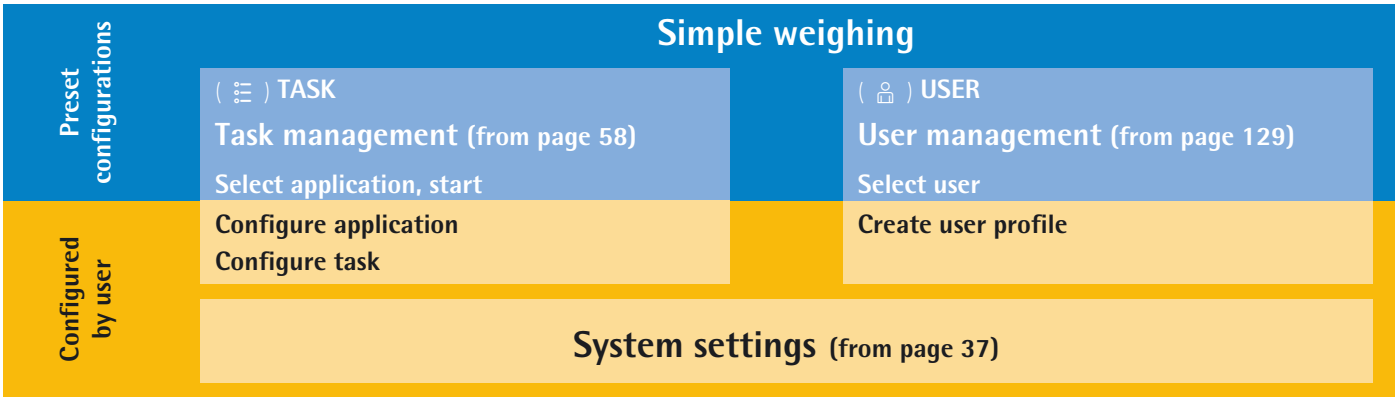


In **Task Management (TASK)**, task profiles with specific applications, weighing and printout settings can be configured.
**User Management (USER)** lets you set up user profiles with specific configuration settings and user rights. You can also set up password protection to meet your security requirements. Your balance can also be used for user management.

The **System Settings (Menu)** contains all basic settings and parameters used to operate the balance that affect the entire balance operation. They can also be used for creating new tasks.

### The Wizard

You can choose between two display types in several menus:

The overview lists all parameters with their set options. You can select each individual option to change its setting.

When you activate the wizard in the same menu, the program guides you **step-by-step**: The individual parameters and their options are displayed in succession.

## Using the Display and Control Unit

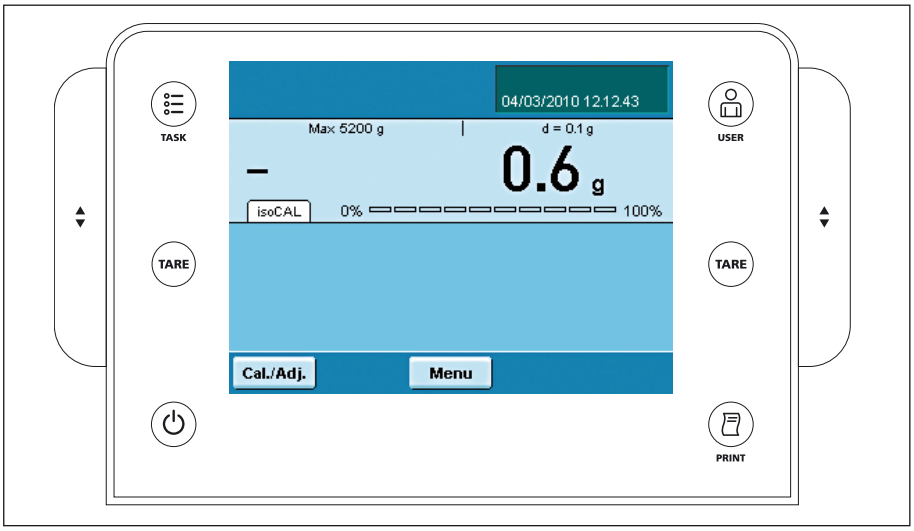


**Control keys:**

| | |
|---|---|
| ( ☰ ) | TASK key: Opens Task Management in which applications can be selected and tasks defined. While working in this menu, you can also use the TASK key to cancel at any time and return to task overview. |
| ( 👤 ) | USER key: Opens User Management in which users can be selected and user settings can be made. While working in this menu, you can also use the USER key to cancel at any time and return to user overview. |
| (TARE) | Left and right TARE keys: Used to zero and tare the balance. |
| ( 🖨 ) | PRINT key: Used to print the currently displayed measurement results or a user-specific print out. |
| ( ⏻ ) | On/Off key: Used to switch on/off and to standby. |
| ▲▼ | Operating elements for electronic draft shield (optional) |

### Display and Control Unit

The tilt angle of the display and control unit can be set as desired to enable optimal readability for changing working conditions. The color and brightness of the display can also be changed to match the lighting conditions in the room (see “User Management” and “System Settings”).

### SD Memory Card for Data Exchange

The display and control unit is equipped with a slot for an SD memory card where you can import and export data (task, user profiles). Handling the memory card is explained in chapter **Importing/Exporting Data**.

## Setting the Language

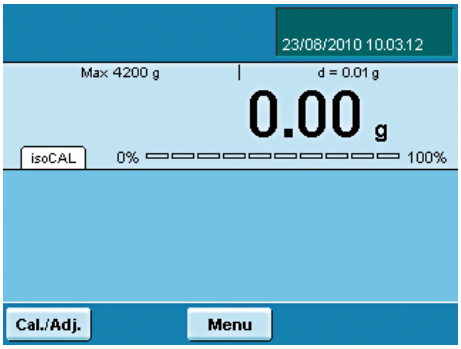


▷ The default language for the display is English.

▶ To change the language, select **Menu** and then **Lang**.

▶ Use the cursor softkeys to select the desired language.
▷ The display changes directly to the selected language.

▶ If you would like to select a language that was not included with the equipment supplied but was later downloaded from the Cubis website, you must first import the language files (see chapter “Importing/Exporting Data”).

▷ To display the downloaded language, select the “Loadable language” in the language list.

## Quick Guide: First Weighing

( ⏻ ) ▶ Press the operating key ( ⏻ )to turn on the balance.
▶ Close the draft shield (if available).
(TARE) ▶ Press the tare key (TARE) to tare the balance.
▷ The balance is tared and the displayed value is zero.
▶ If required, open the draft shield and carefully place the sample on to the weighing pan (in a suitable container if required).
▶ Close the draft shield (if available).
▶ You can read the measured value as soon as the weight value stops changing and the unit is displayed.

# User Interface (Touch Screen)

Many operating steps are carried out via the display using the touch screen. The display varies depending on whether the application software is in operating mode or a menu is currently open (setup mode).

## Display in Operating Mode

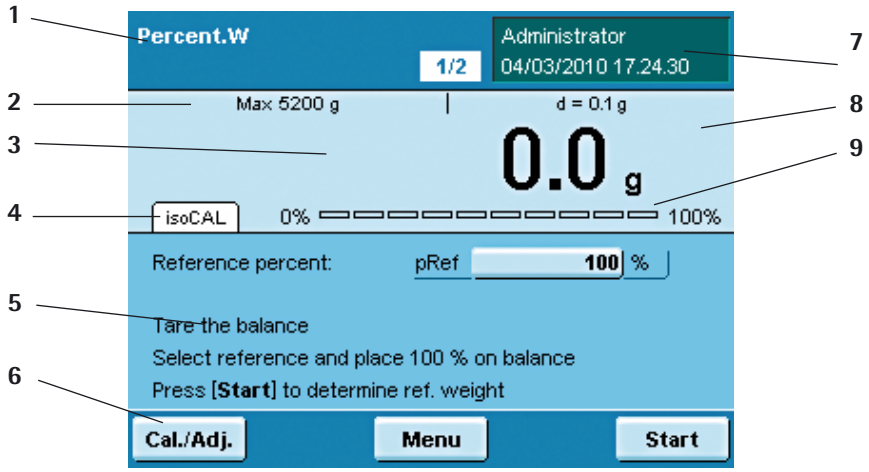


**M** Verified balances feature the following additional displays:

In the line for metrological data:
- **Min** Minimum weight
- **e** Verification scale interval

In the value range:
- **o** Calculated values, such as:
- ⚠ Values ≤ 0 and other values
- **pcs** Piece count

1. **Function display**: Current task (here: Step 1 of 2)
   Touching this area displays the description of the task.
2. **Line for Metrological Data:** left: Weighing Capacity (max); right: **d** = Readability (resolution) of the balance.
3. **Value range** with current measurement value (the numeric value is displayed in black numbers once the weighing system reaches stability; beforehand it is displayed in gray numerals)
4. Field for **status and warning messages** (see below)
5. Task area with instructions on how to proceed
6. Toolbar with currently available buttons
7. User field: Displays the current user, date and time
   Touching this area displays the description of the user.
8. For _.CE model balances verified for use as legal measuring instruments: Displays the weights that are not weight values, such as calculated values
9. Scaled measurement value display (percentage of used weighing capacity)

## Status and Warning Messages

Tabs with the following messages may be shown here:
**isoCAL** is displayed: isoCAL is active (extended temperature range)
**isoCAL flashes**: Calibration is required
Touch the tab to activate the function.

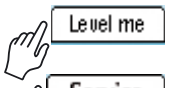


**Level me flashes**: Balance is not level, leveling is required
Touch the tab to activate the function.

**Service:** The date for the next service has arrived.
Touch the tab to find Sartorius Service contact information.

**GLP**: GLP print is active, the header will be printed.
Touch the tab to print the footer.

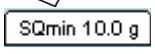


**SQmin**: The SQmin value entered is permanently displayed.
**SQmin flashes**: the weight value is less than the entered SQmin value.

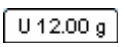


**U** or **U*** or **PA**: The selected DKD value (measurement uncertainty) is currently displayed.

**Ion**: Ionizer in progress (only when ionizer available)
Touch the tab to deactivate the function.

### Display in Setup Mode

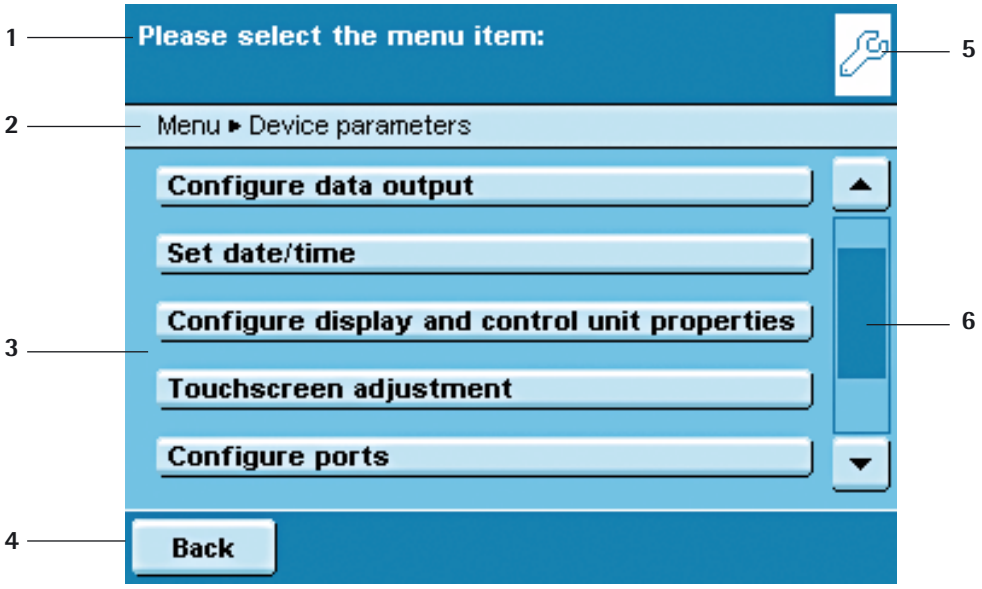


1 Interactive area with instructions on how to proceed
2 The navigation line shows your current location in the menu structure
3 Working environment with selectable options
4 Toolbar with the available buttons
5 Symbol indicating which menu (TASK, USER or MENU) is currently open
6 Scroll bar to browse the selection area

## Using the Touch Screen

**Equipment may be damaged by objects with points or sharp edges (e.g., pens).**
The touch screen should only be operated using the finger tips.

All **operating elements** on the touch screen are depicted in a light color with a shadowed 3D effect. They are activated with a light touch.

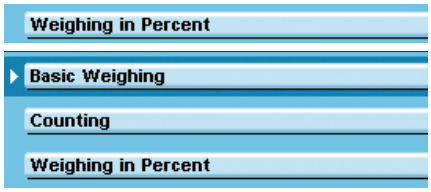


**Alternative selection**: When only one of several options is available, always touch the desired option and the program will automatically switch to the next view.

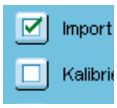


**Multiple selection**: When several options are available for selection, each option will have a checkbox. You can select or deselect the desired option by touching the checkbox (adding or removing the checkmark).
Touch Next to go to the next query.

For some displays, you will need to use the **scroll bar** to view all options. You can either slide the bar (touch it and drag in the desired direction) or touch the up or down arrow keys.

## Entering Text and Numbers

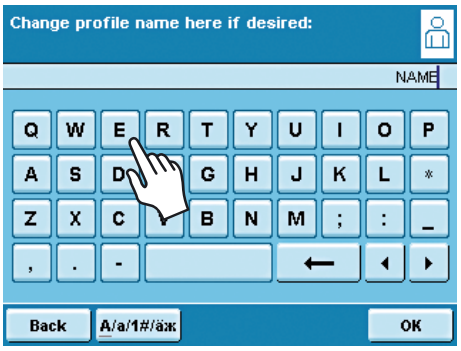


A keyboard will appear whenever you have to enter text and numbers. A cursor appears in the entry line above the keyboard.

▶ Select the desired character with a light touch.

▷ The entered text will appear in the entry line.

Press the **shift button** to change the input mode between uppercase letters, lowercase letters, numbers and the complete character set with special characters.

The **backspace key** is used to delete the character to the left of the cursor.

Touching the entry line toggles the input mode.
**Overwrite mode**: The cursor marks an individual character or the entire entry. The marked text will be overwritten by the new entry.
**Input mode**: The cursor is positioned in the blank space between characters so that you can enter more characters.

Use either of the **arrow keys** to move the cursor one space to the left or to the right.

The **Back** key cancels the entry process and takes you back one step to the last view.

The **OK** key ends the process and saves character input.

### Opening and closing the rotation draft shield (models MSx6.6S/3.6P/2.7S):

Defining the opening width:

▶ Touch **DraftShd**.

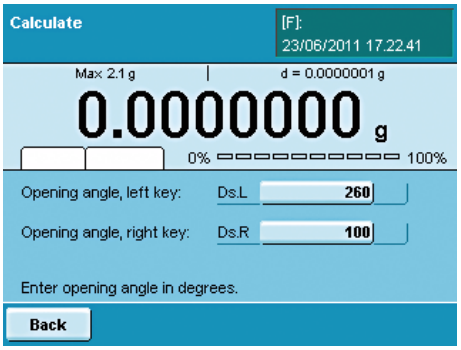


▷ The settings for the opening angle are displayed.

▶ Check the settings and change as required.

Draft shield opens according to the opening angle setting.

## Activating/Switching Users

When the balance is in the operating mode, the active user is shown at the top right of the display in the user field. To activate another user, open the User Management menu.

( 🔑 ) ▶ Press the USER key ( 🔑 ).

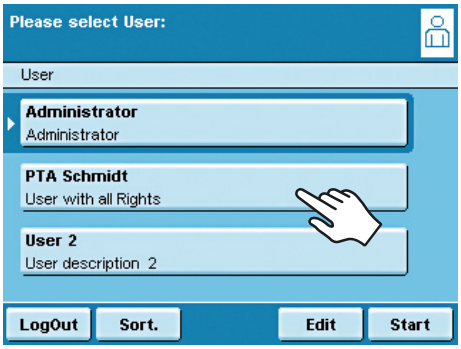


▷ The user selection is displayed. The current, active user can be recognized by the small arrow and the dark background.

▶ Touch the user you want to activate.

▶ If password protection activated, enter your password.

▷ The program switches back to operating mode, with the selected user profile activated.

▶ When you touch **Start**, the user who is currently selected will be activated.

# System Settings (Menu)

This menu summarizes all the balance settings relevant to the device. Basic settings can be made here that immediately affect the device. Changed settings do not affect previously defined tasks and user profiles.

All system settings are user-independent, i.e., they are valid for all users.

As long as a task is active and/or a user has been selected, several basic settings cannot be changed. In order to change all settings, “Weighing” has to be selected in the operating mode and no user may be selected.

Not all functions/settings can be selected on balances used in legal metrology!

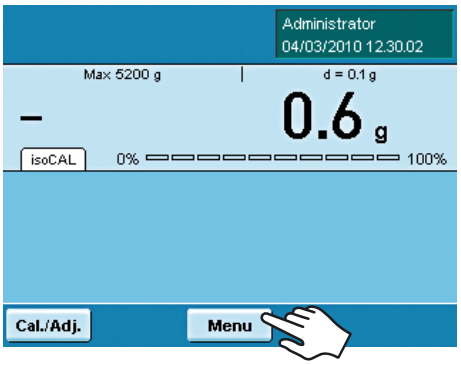


▶ To open System settings, touch **Menu** when the balance is in the **operating mode.**

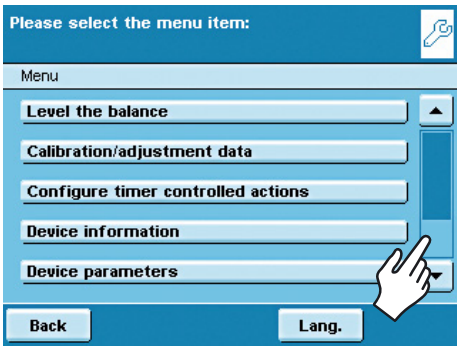


▷ The list of available system settings is displayed.
▶ To view all menu items, use the right scroll bar.
▶ Touch the menu item whose settings you want to change.

System settings are divided into the following menus:
- Level the balance
- Configure calibration/adjustment
- Configure timer-controlled actions
- Display device information
- Configure device
- Import/export data
- Activate service mode

You have already learned how to use the menus (see chapter “Using the Touch Screen”). Only the configuration options and their meanings are described below.

## Leveling the Balance (Q-Level)

It is essential for exact weighing results that the balance is absolutely level.
The front leveling feet can be used to level out small tilts of the floor.
Leveling must always be carried out when the balance is moved to another setup location or shifted in its place.
Depending on the model, the balance is equipped either with leveling feet that can be operated manually or motorized leveling feet.
An integrated sensor detects the alignment of the balance and triggers a warning message when leveling is required. You can configure the leveling notice and the automatic leveling function (see System Settings/Device Parameters).
When the isoCAL function is activated, the isoCal function is triggered after manual leveling. Balances with motorized leveling feet are leveled automatically prior to each new calibration/adjustment.

**Note:** The balance needs to be re-leveled and then adjusted each time its setup location is changed.

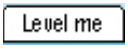


When “Level me” appears on the display, you must level the balance.
The process is quick and easy.

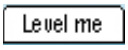


▶ Touch the tab **Level me**

or

▶ Select the option **Level the balance** from the menu.
▶ Make sure that the weighing pan is empty.

**Balance with motorized leveling feet**
**(available for all models with weighing ranges of > 6.1 g and ≤ 6.200 g):**

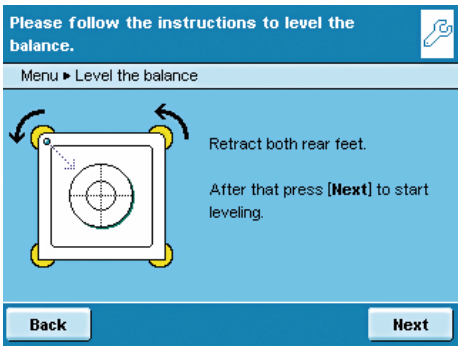


▶ To start the leveling function, touch **Start**.
▶ Follow the instructions on the display.

**Balance with electronic level indicator and manual leveling feet**

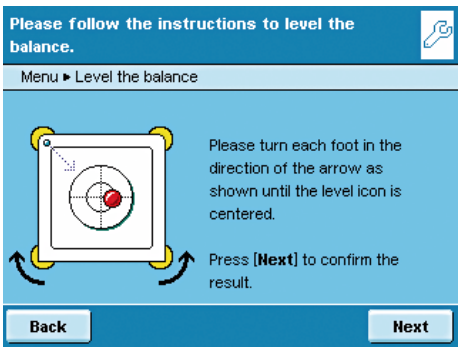


▶ Follow the instructions on the display.

After each leveling routine, the balance must be **calibrated/adjusted** (see chapter **Calibration and Adjustment**).

# Configuring Calibration/Adjustment

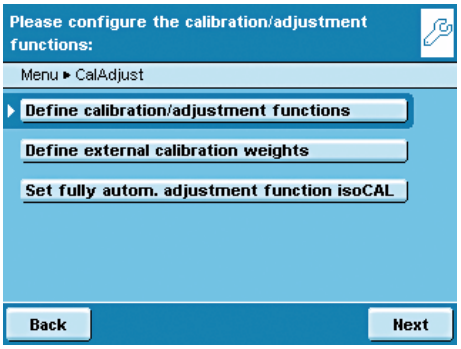


Setting options are divided into the following sections:
- Defining calibration/adjustment functions
- Defining external calibration weights
- Setting fully automatic adjustment function isoCAL

▶ Enter the desired settings in all submenus.

▶ To save settings, touch **Save**.

Factory settings are marked with an *.

### Defining Calibration/Adjustment Functions

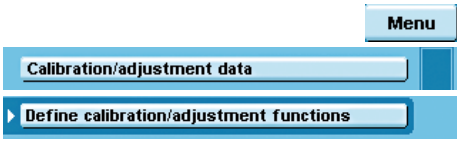


**cal./adj. key**: Function of the key: Block key/*Configure key selection menu/ Select fixed 1-key function.
**cal./adj. selection menu**: Which calibration/adjustment functions should be offered when touching the cal./adj. key?
**Cal./adj. sequence**: Options: *Calibration, thenperform auto. adjustment/ calibration and then manual adjustment.
**Cal./adj. unit**: Options: *gram/kilogram/defined by data record.

### Defining External Calibration Weights

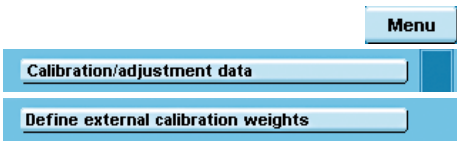


**Number of ext.calibration weights**: Enter the number.
**External calibration weight n**: Enter the data for each calibration weight: Weight value
(in grams)/ID/Certificate/Validation

### Configuring Fully Automatic Adjustment Function isoCAL

**isoCAL**: Define the function: Off/Only warning level, manual trigger/*On, automatic implementation
**isoCAL warning level:** *Only isoCAL status field/Warning message, repeat/ Alarm message, adjustment mandatory.
**isoCAL temperature**: Enter temperature differential (in Kelvin).
**isoCAL interval**: Enter interval in hours.

## Timer-controlled Actions

You can program the following actions so that they are run automatically at pre-specified times:

- Display a message and execute a command (see example below)
- Execute a command
- Show a message (e.g., a prompt as a reminder)

▷ The available actions are displayed. When you open this menu for the first time, the list will be empty.

▶ Touch **Edit**.

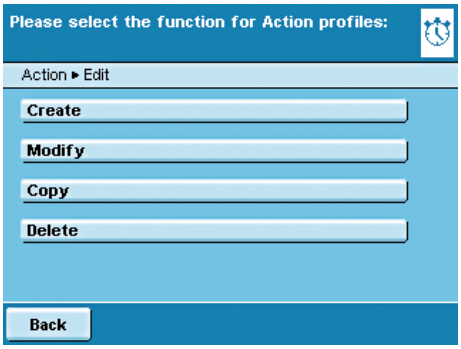


▶ To define a new timer-controlled action, touch **Create**.

Here you can later also modify, copy or delete each action.

**Example**: You want to have the “Internal calibration/adjustment” function performed each morning at 7:00 a.m. In addition, you want a message to be displayed.

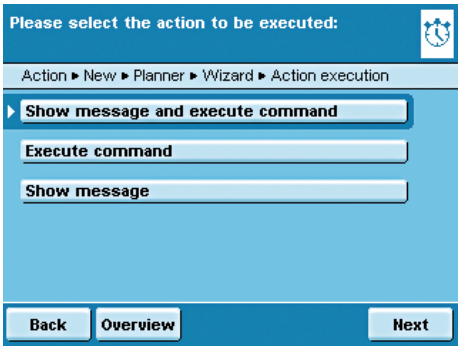


▶ Select the action you want to install (e.g., Show message and execute command).

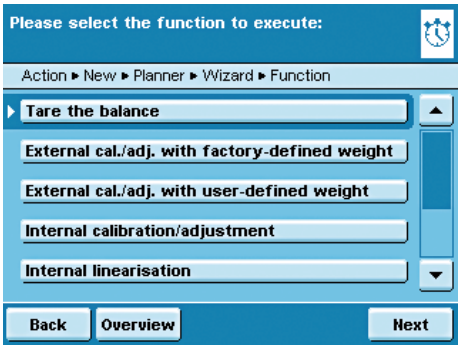


▶ Select the command you want to have executed (e.g., Internal calibration/ adjustment).

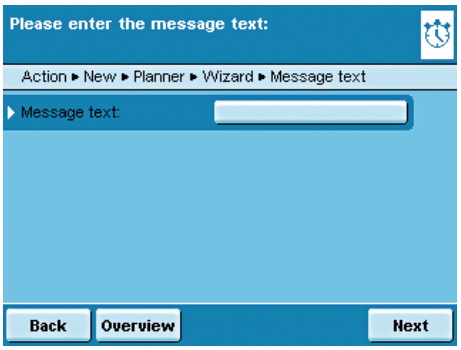


▶ Enter the text you want to be displayed during the action (e.g., Timer-controlled adjustment).

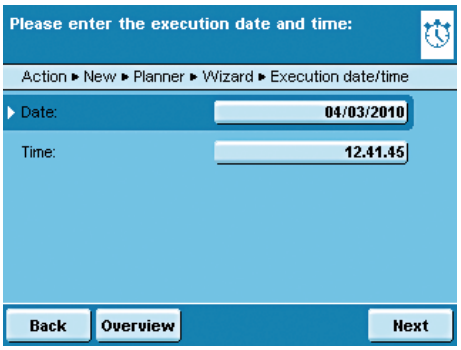


▶ Enter the time when the action should be performed for the first time.

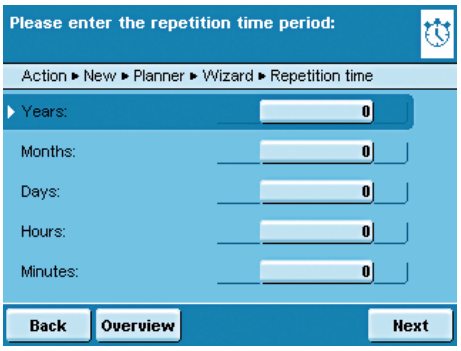


▶ Define the time interval at which you want the action to be performed repeatedly (e.g., 1 day for daily repetition).

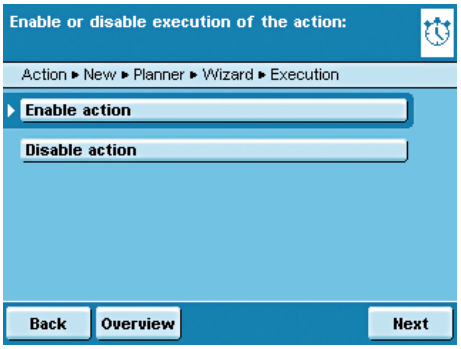


▶ To start the action at the time set, select **Enable action**.

Here you can disable the programmed action at any time and re-enable it later with a new starting time.

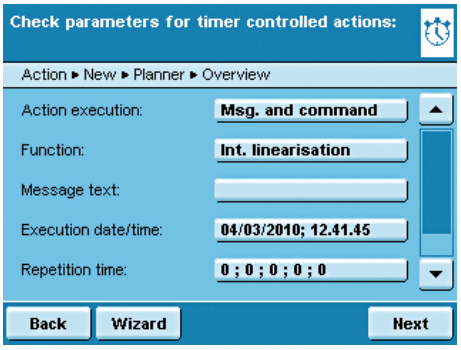


▷ The overview of all settings for the action is displayed.

▶ Check and correct all settings as required.

▶ Touch **Next**.

▶ Enter a name and a description for the action.

▶ To save the action, touch **Save**.

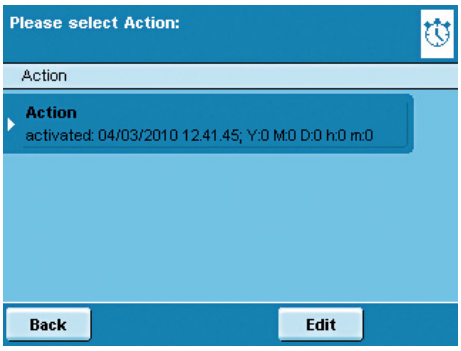


▷ The programmed action is displayed in the list of actions.
Here you can edit them again at any time.

## Displaying Device Information

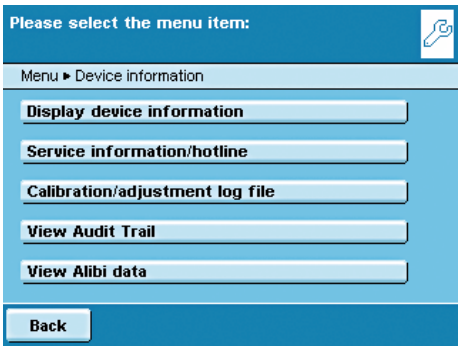


You can view various information here.

▶ Select the appropriate area for the information that you want to view.

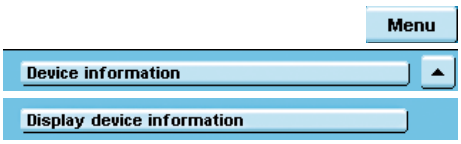


### Viewing Basic Information

Here you can find all information about manufacturer, model, serial number, host name and IP address used.

▶ To display SQmin and DKD parameters, touch **SQminDKD**.

▶ To view the version of the balance, display and control unit and application software, e.g., **Version**.

▶ To view the weighing ranges and digits (resolution), touch **Ranges**.

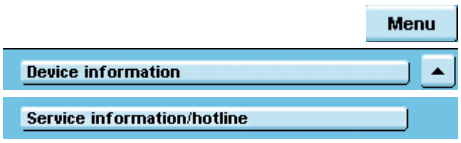


### Information about Service and the Hotline

Service contact information is displayed here along with the hotline number as well as maintenance contract and maintenance interval information.

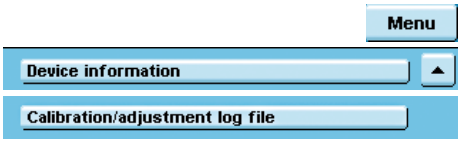


### Viewing Calibration and Adjustment Data

The log file is displayed here with the results of all calibration and adjustment routines.

### Viewing Records in Audit Trail

In Audit Trail, all changes are logged that have been performed in the menu, in the user profiles and in the task profiles.
The following will be recorded: user, profile, parameter ID, parameter, old and new setting.

## Alibi Memory

The alibi memory contains (stores) weighing results with date and time and process number. This takes place every time a print event is triggered (e.g., by pressing **Print** ( 🖹 )). The alibi memory is required when you wish to continue working with the weighing data on a computer.

The data memory has a ring buffer. The oldest data records can thus be overwritten by new ones. The user can define a memory-time dependent overwrite protection as well as a storage period if desired (default: 90 days, see chapter "Device Parameters"). The alibi memory can contain approximately 450,000 data records; the storage capacity depends on the volume of the individual data records.

M The alibi memory is verifiable. When the balance is verified, you must check the correct function of the alibi memory by saving some values.

M If the alibi memory is used in legal metrology (according to Council Directive 90/384/EEC, replaced by 2009/23/EC , you should observe the following instructions:

- Make sure that there is sufficient storage capacity. Responsibility for this lies with the operator.
- The weighing results should be stored together with a unique ID code (e.g., number or date and time). This makes it possible for every weighing operation or weighing result to be assigned and verified if necessary without any problem. These ID codes must be indicated on any records generated on peripheral devices.
- When data are output, all the required tare and net values will be saved.
- It must be possible for the contractual partners involved to be able to check and verify the stored weighing results.
- Any continuously indicated weighing results that are not previously stored and have no identification codes may only be used in applications that are not for use in legal metrology (e.g., batching, controlling or the like). It is not permissible to circulate any results lacking identification codes for applications used in legal metrology!
- Records can be prepared by a peripheral device not subject to legal verification according to the preamble to Annex I of Directive 90/384/EEC (2009/23/EC) and Section 7b (3) 2 of the German Verification Act.
  These records must contain the following information:
  - An ID for every weighing result;
  - When used in Germany, an additional indication that the weighing results may be compared with the weighing results legally stored on basis of the identification.

You must first install and activate the alibi memory in order to use it (see Device Parameters/Configuring the Alibi Memory).

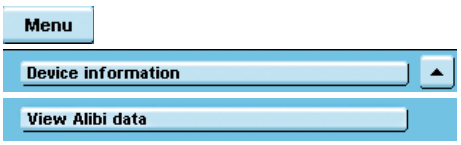


**Searching for and Displaying Data in the Alibi Memory**
You can search for data using various search criteria and view the storage capacity of the alibi memory.

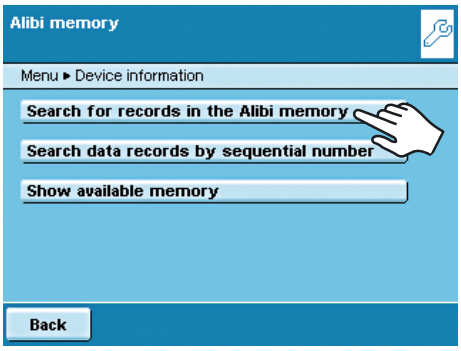


## Searching for Data Records by Date

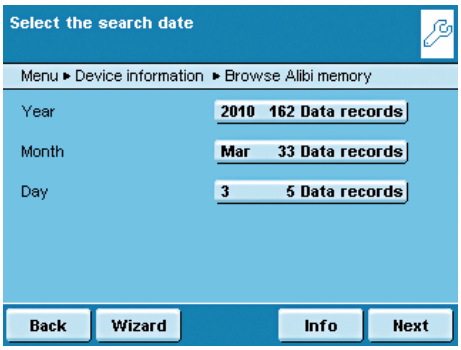


▷ An overview appears in the display.

▶ Limit the search by selecting year, month or day.

▶ Touch **Next**.

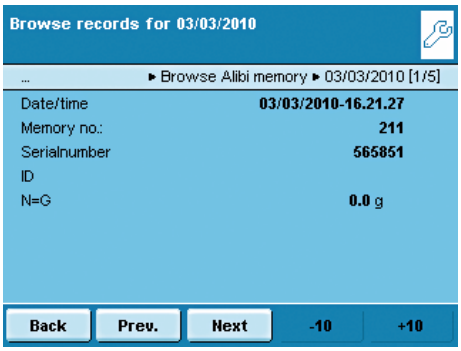


▷ The desired data are displayed.

▶ Using the **Prev.** and **Next** buttons, you can display more data records from the selected date.

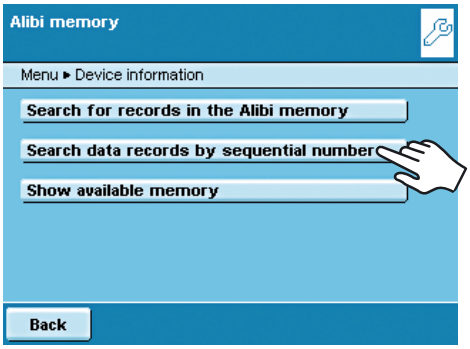


## Searching Data Records by Sequential ID Number (Data Record Number)

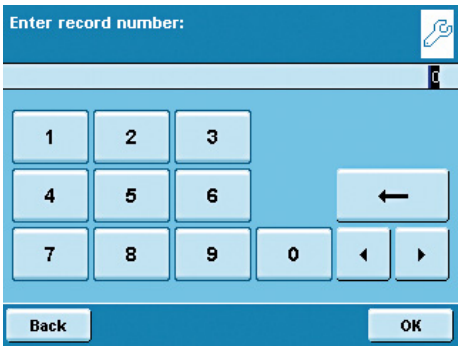


▶ Input the number of the desired data record.
▶ Touch **OK**.

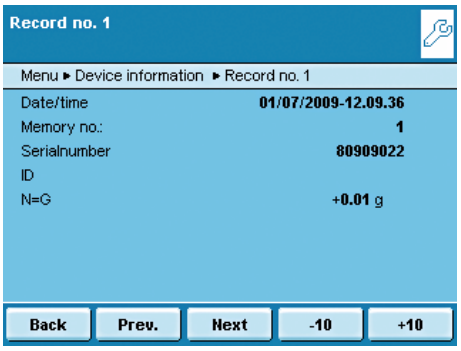


▷ The desired data record appears in the display.

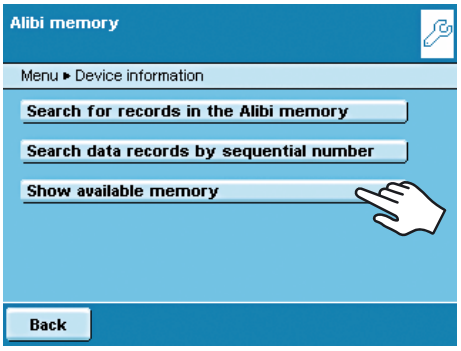


## Viewing Information on the Alibi Memory and Available Memory Space

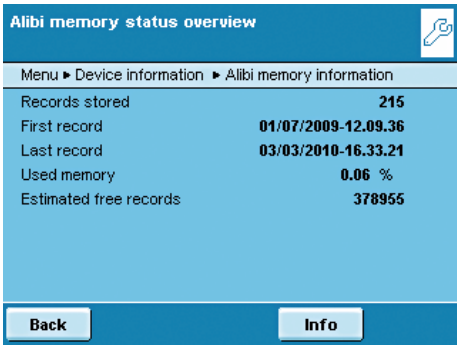


All important status information on the alibi memory are shown here. You can view the percentage of storage capacity utilized and an estimation of the number of data records that can still be stored. The exact number depends on the volume of the individual data records.

# Device Parameters

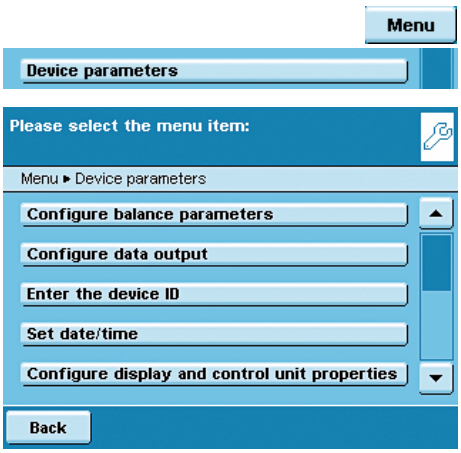


Here you can change the following equipment settings and update the software. All settings are user-independent.

- Balance parameters
- Data output
- Device ID
- Date and time
- Display and control unit properties
- Touch screen adjustment
- Interfaces
- Alibi memory
- Load a software update
- Software activation codes (e.g., for “Q-Apps” software options)
- Restore factory settings
- Motorized draft shield (optional)
- Ionizer (optional)

## Configuring Balance Parameters

Factory settings are marked with an *.

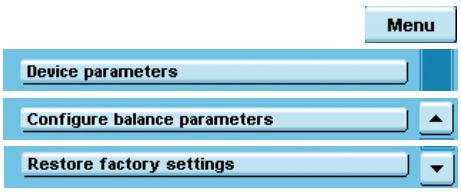


### General Weighing Settings

Here you can configure the standard settings for the general weighing functions. These settings can be changed for a specific task whenever a new task is created.

These settings can only be changed when the balance is set to “Weighing” in the operating mode. If **General weighing settings** cannot be selected, you can touch **TASK** ( ☰ ) to toggle to Task Management and select **Weighing**.

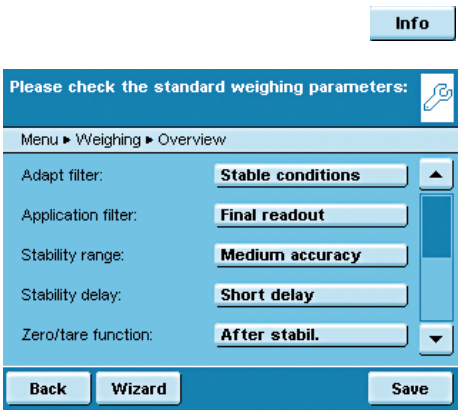


In order to receive detailed information on the individual setting options, touch **Info**.

**Adapt filter**: This setting defines the measuring time of the balance to filter out the effects of unfavorable weighing conditions such as drafts or vibration.
Options: Very stable/*stable/unstable/very unstable conditions
**Application filter**: Equalizing the load deviations in the display.
Options: *Final readout/Filling mode/Low filtering/W/o filtering
**Stability range**: The stability indicator lights up when the weight results are constant within a defined range. Options: Maximum precision/very precise/*precise/fast/very fast/maximum speed.
**Stability delay**: This setting lets you compensate for slowly abating disturbances, such as turbulence in the weighing chamber of an analytical balance).
Options: *Very short/short/medium/long delay.
**Zero/tare function**: Conditions for carrying out the tare function.
Options: Without/*after/at stability.
**Auto zeroing**: When this option is turned on, changes of a set fraction of scale intervals per second from the display zero point are tared automatically.
Options: On/*Off
**Base unit**: Weight unit to be used for this task. Options: All available weight units, *gram.
**Display accuracy**: A lower display accuracy results in a faster display.
Options: *All places on/Last place off
**Tare/zero at Power**: Automatic taring when the balance is switched on.
Options: *On/Off

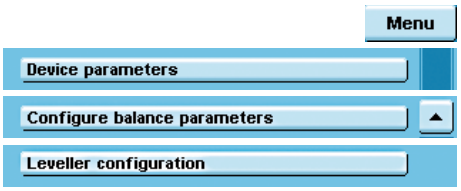


### Setting Up Q-Level Leveling Function

You can configure the leveling function here.

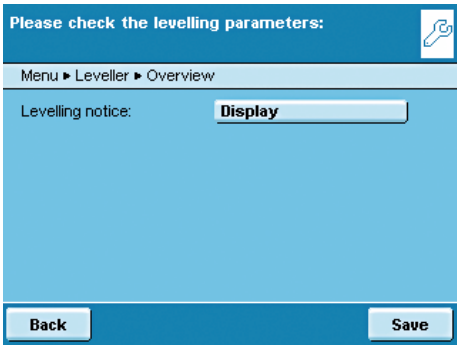


### Leveling Notice

**Off, no notice**: The prompt to perform leveling is omitted.
**Status display**: As soon as leveling is required, the tag **Level me** appears and flashes.
**Alarm message, leveling mandatory**: As soon as leveling is required, the tag **Level me** appears and flashes. If this notice is ignored, an alarm message appears after 5 minutes. In that case, you can only continue working after you have performed leveling.

### Automatic Leveling (Balances with Motorized Leveling Feet Only)

**Off, start by touching**: To activate automatic leveling, touch **Start**.
**Activate the fully automatic function**: Before every calibration/adjustment routing, the balance will be leveled automatically.

▶ To save settings, touch **Save**.

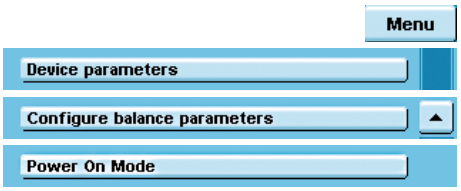


### Defining the Startup Mode of the Balance

▶ You can select the mode that is used when the balance is turned on and when you touch the ( ⏻ ) operating key repeatedly.

Options: **On/standby** or **Always on**

▶ To save settings, touch **Save**.

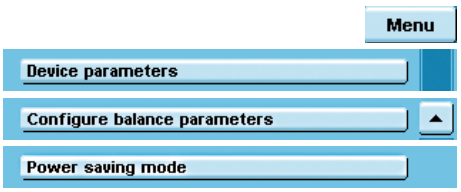


### Defining the Power Saving Mode of the Balance

▶

Switch the power saving mode of the balance on or off.
**Off, no function**:
The power saving mode is not in use.
**Auto shutoff after 2 minutes**: The backlighting of the display and control unit switches off if the device is not operated for 2 minutes.

▶ To save settings, touch **Save**.

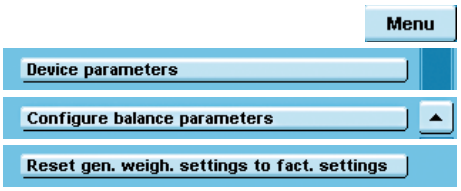


### Resetting General Weighing Settings to Default

You can reset all balance settings back to the default delivery status (after a security prompt).

## Configuring Data Output (Print Parameters)

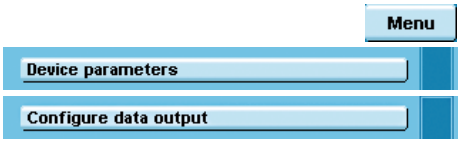


Here you can configure all settings for printing and data output. Several of these settings depend on the interface configuration (see chapter Interfaces).

Factory settings are marked with an *.

In order to receive detailed information on the individual setting options, touch **Info**.

**Interface to the print output**: Options: COM port (peripheral), Port A
PC (USB), Port B
Optional, Port C
Network, Port D
Print to file
**Protocol**: Options: Print/SBI/XBPI/Web service/SICS/Remote display.
This setting cannot be changed here, but is defined when configuring the interfaces.

The parameters and settings displayed here depend on the configured protocol.
**GLP standard print**: When should the ISO/GLP output be possible? Options: *Off/enabled for cal.-adjustment/always enabled.
**Taring after printout**: Automatic tare after printing? Options: *Off/on.
**Print event**: What event should trigger printing? Options: *PRINT key/Start of task/Initialization of application/Result of application/Printing component/Evaluation of application/Exit task/Calibration - adjustment.
**Print key elements**: Which elements should be printed?

For further information, please refer to the chapter **Interfaces**, in the section **Configuring a Printout**.

## Entering the Device ID

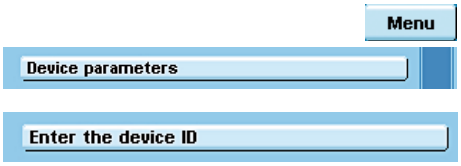


These two IDs can be added to the printout.

- ▶ Select the entry for both IDs.
- ▶ Enter the desired value (text) for each ID.

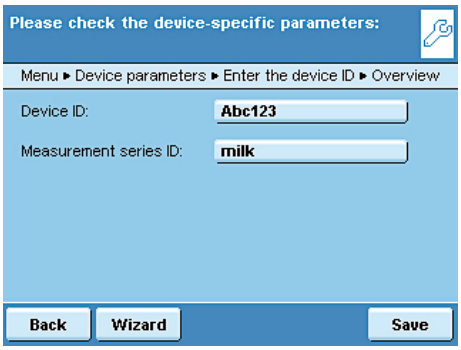


- ▶ To save settings, touch **Save**.

For related input and output commands for the printout, see chapter “Interfaces: SBI Commands” on page 156.

## Setting the Date and Time

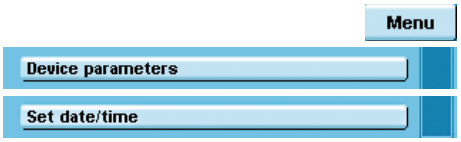


▶ Enter the current date and time in the prescribed format.

## Configuring Display and Control Unit Properties

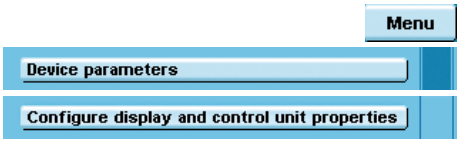


The following properties of the display and control unit can be changed, as necessary: **Language**, **background colors**, **brightness**, **acoustic signal**.

These general properties are applied to all user profiles, are also used when no user is logged in, and serve as a template when a new user profile is created.

## Adjusting the TouchScreen

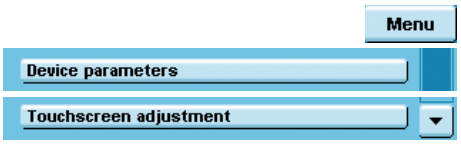


Here you can customize the marker button on the touch screen (finger pressure, angle of touch, etc.)

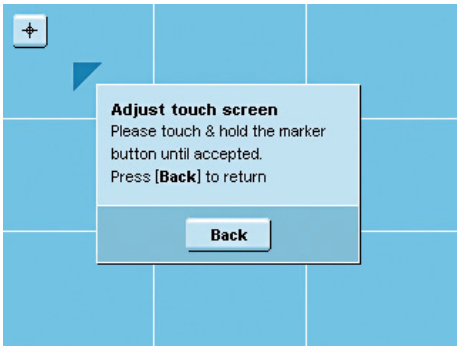


▶ Follow the instructions on the display.

## Configuring Interfaces and Network Settings

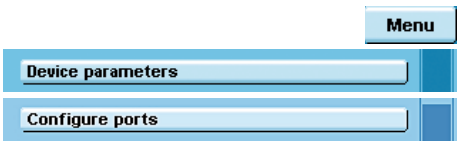


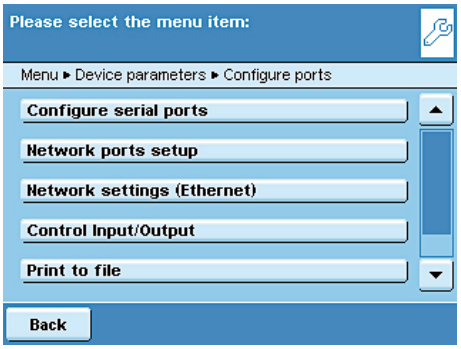


Here you can configure the serial interfaces and define settings for the network.

There are also settings for:
- Control inputs/outputs
- Print to file
- FTP server settings

A detailed description of the connection options and data interface ports can be found in the chapter **Interfaces**.

## Configuring Serial Ports

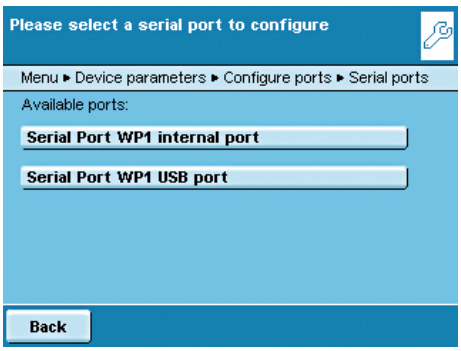


▷ The available interfaces are displayed.
▶ Select the interface you want to configure.
▶ Determine all settings for this interface.

▶ To save settings, touch **Save**.

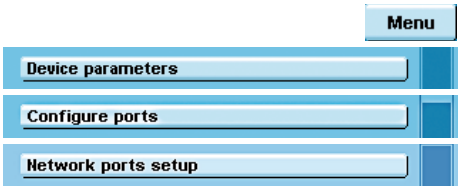


## Configuring the Network Interface (Ethernet)

For more information on network operation, see chapter **Interfaces**, section Network Interface.

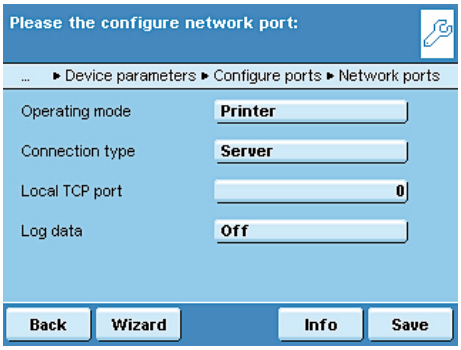


▶ Select operating mode for the network interface.
**No function**/**xBPI** (extended Sartorius communication) **SBI** (Sartorius standard protocol)/**Printer output**/**SICS Protocol**

▶ Select connection type.
**Server** or **client** connection

▶ Configure the local TCP port.

▶ To save settings, touch **Save**.

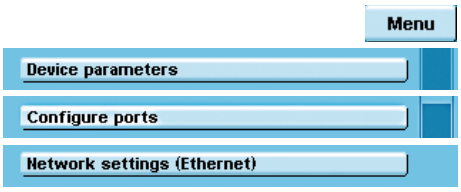


## Configuring Network Settings (Ethernet)

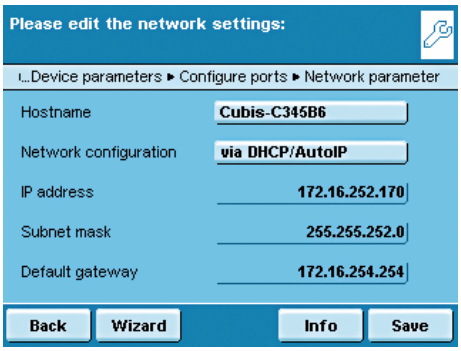


▶ Define the settings for network operation.

The **device name** (max. 24 characters) that you define here can be printed on logs.
The **IP address** can be entered as default or obtained automatically.

▶ To save settings, touch **Save**.

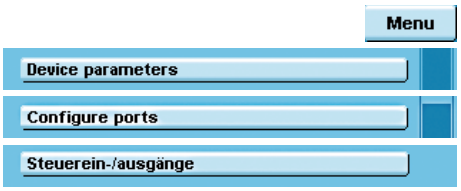


**Configuring Control Inputs/Outputs (e.g., for Remote Switch)**
If you have connected a remote switch, for example, via the peripheral or optional port, you can define its function here.

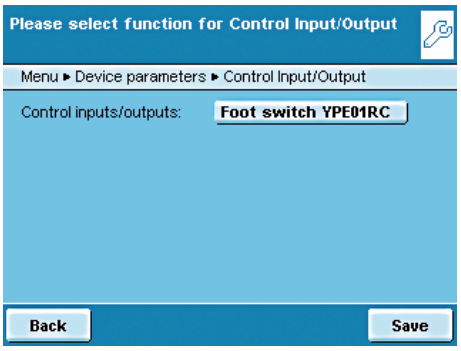


▶ Define the setting for each ported interface.

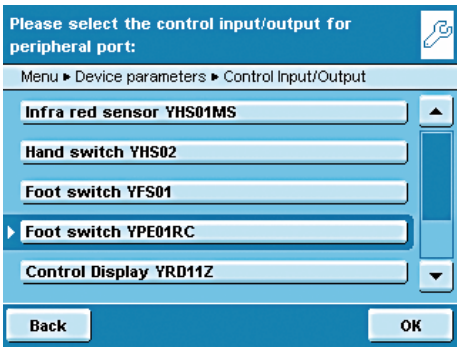


▶ Select the ported hardware device or control function.

During checkweighing, the control outputs have no function when set to:
- Foot switch YPE01RC
- Control inputs

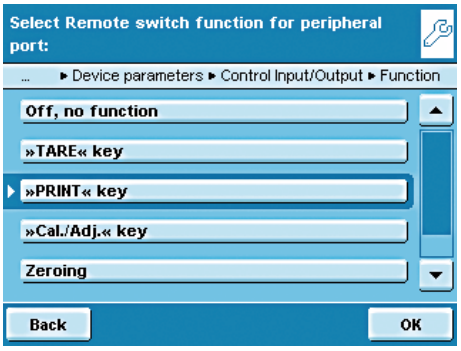


▶ Define the settings for the control inputs/outputs.
Off, no function/TARE key/PRINT key/Cal./adj. key/Zeroing/taring

▶ To save the settings, touch Save.

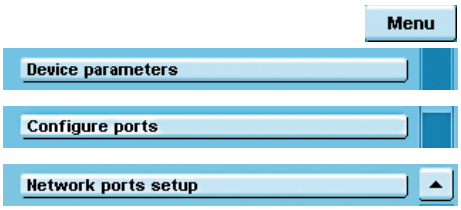


## Configuring "Print to file"

Purpose:
- Transferring a print file in TXT or CSV format to a SD card or FTP server.
- Viewing a print file directly in an internet browser.

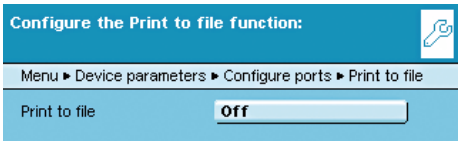


▶ Select **Off**.

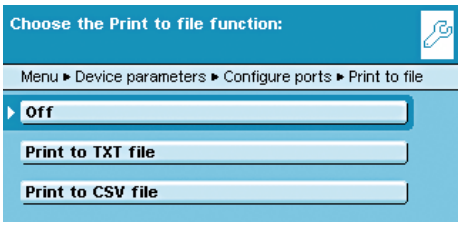


▶ Specify the file format.

Print to CSV file:

In addition to the SBI output (like in the TXT file), three additional columns are also written to the file: ID, Value and Unit. The 4 columns are separated by the ";" character. The "+" sign has also been removed in the third column and the decimal point has been replaced by a decimal comma (because of Excel).

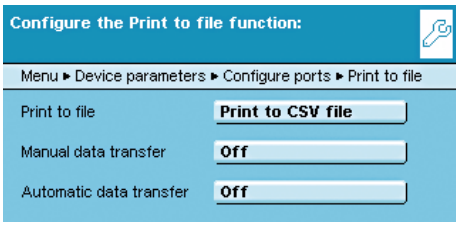


▶ Touch **Off** to specify the settings for automatic or manual data transfer.

▷ The data is deleted from the balance after the automatic or manual transfer so that only the new data is transmitted the next time there is an automatic transfer.

▷ Manual transfer:
Touch **Trans.SD** or **Trans.FTP** during operation to transfer data to the SD card in the balance or to the FTP server.

▷ The transfer takes place in the data/print directory.

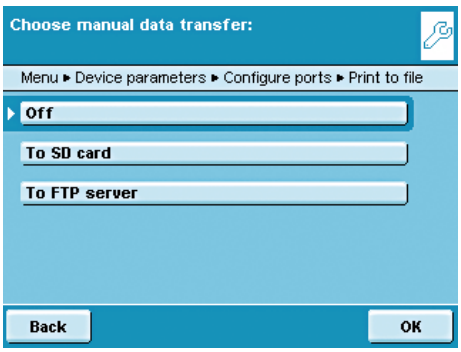


▶ Select the output medium for the file.

▷ This file can be transferred manually or automatically to the SD card of the FTP server. Combinations are also possible, e.g., manual transfer to the SD card and automatic transfer to the FTP server.

"To SD card:"

▷ When exporting, print files can also be exported to the SD card independent of the transfer. This will create a copy (backup) of the file to the SD card. This does not delete the file from the balance. After the export, the files are located in the directory data/all/EXPORTxxxx/print.

"To FTP server:"

▷ If you use the FTP server option for the transfer, the parameters for the FTP server must be entered in the menu (see next section). The user must have the rights to create subdirectories on the FTP server.

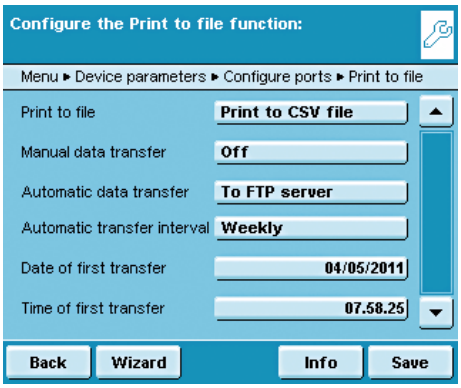


▶ Select the desired interval, the date and the time of the first transfer.

▶ To save settings, touch **Save**.

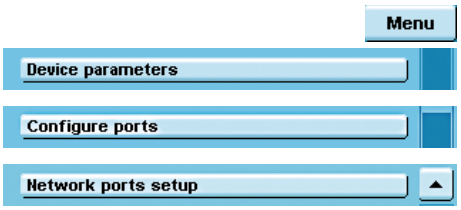


### Configuring Data Transfer Setting for an FTP Server

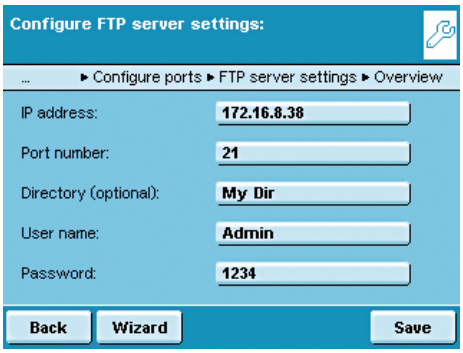


- ▶ Specify the data transfer settings to an FTP server.
- ▶ Enter the following parameters for the FTP server:
  IP address, port, FTP user name, FTP password, subdirectory also optional.
  The user must have the rights to create directories on the FTP server
- ▶ For more information about displaying a print record via an internet browser, go to chapter **Interfaces,** section “Remote Control of the Balance from a PC via Ethernet.”

## Configuring the Alibi Memory

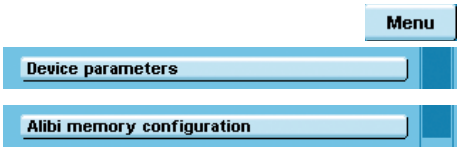


Here you can switch on the alibi memory, delete the recorded data and set the interval for automatic deleting.

- ▶ Slide the right scroll bar in the submenu **Device parameters** downward to the menu item **Alibi memory configuration**.

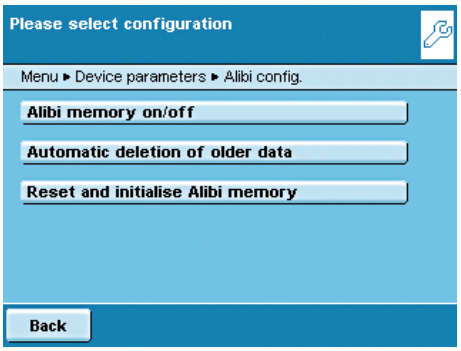


### Turning the Alibi Memory On/Off

- ▶ Select whether you want to have the alibi memory switched on or off.

### Automatic Deletion

- ▶ Define whether the data stored in the alibi memory should be deleted automatically at regular intervals after a pre-specified time.
- ▶ As appropriate, enter the desired interval (in days).

### Resetting and Initializing the Alibi Memory

You can delete the alibi memory immediately. The settings for the alibi memory (On/Off, automatic deletion) will remain stored.

- ▶ To delete data in the alibi memory, confirm the security prompt.

## Loading a Software Update

Cubis software is updated at regular intervals. A detailed description of how to perform a software update on your balance can be found in chapter **Updating the Software**.

## Restoring Factory Settings

You can reset all settings individually to the factory settings at any time.

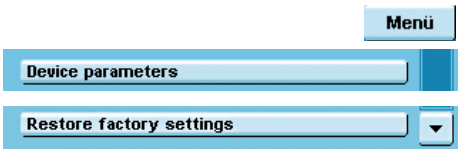


▶ Use the cursor softkeys to navigate through the **Device parameters** submenu to **Restore factory settings**.

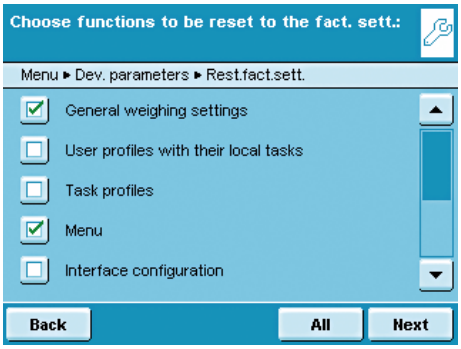


▶ Mark any settings you want to reset and select **Next**.
▶ Confirm the reset when prompted.

## Installing the Motorized Draft Shield (Optional)

On balances equipped with a motorized draft shield, the control unit has buttons on the right and left sides. These buttons can be used for motor-driven opening and closing of the draft shield doors. You can configure the functionality of these keys in the menu.

Models with the analytical draft shield:
For example, you can configure the left key to open and close the right and upper door (for right-handed users) and the right key to open and close the left door (for left-handed users). The opening width (entirely or partially) of the sliding panels can also be defined. You can configure these settings manually on the draft shield itself (see “Learning Function” below).

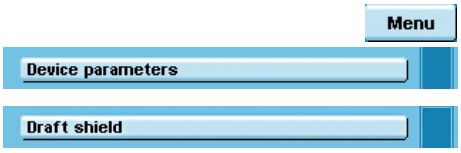


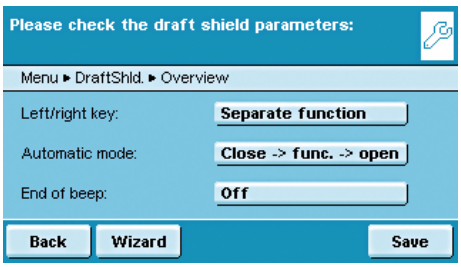


▶ Check and correct all settings as required.
▶ To save settings, touch **Save**.

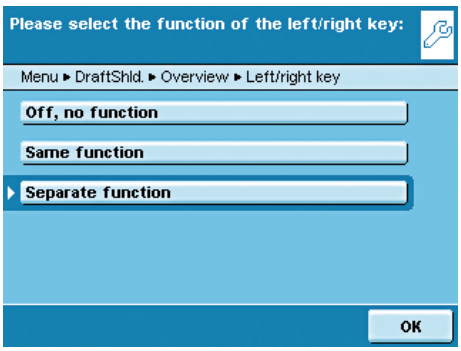


▶ Define the functions for the left and right keys:
**Off, no function**: The keys have no function.
**Same function**: Both keys have identical functions.
*__Separate function__: The left and right keys are configured with different functions.

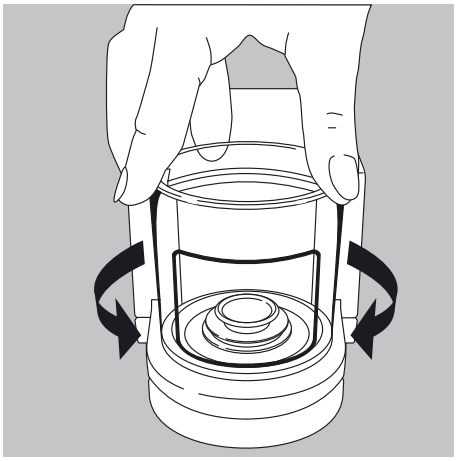

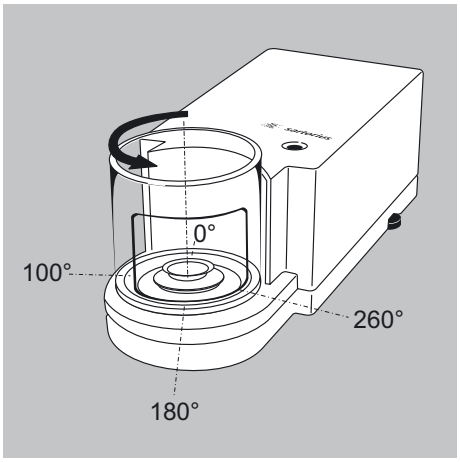


Models with a rotation draft shield (MSx6.6S/3.6P/2.7S):

| | Same function (one opening angle) | Separate function (2 opening angles) |
|---|---|---|
| Define the opening width | Manually select the desired opening angle | – |
| Touch the ⇕ key | 1) Open to the previously selected opening angle<br>2) Close | 1) Touch the left ⇕ key: Opens 260° clockwise<br>Right ⇕ key: Opens 100° counterclockwise<br>2) Close |

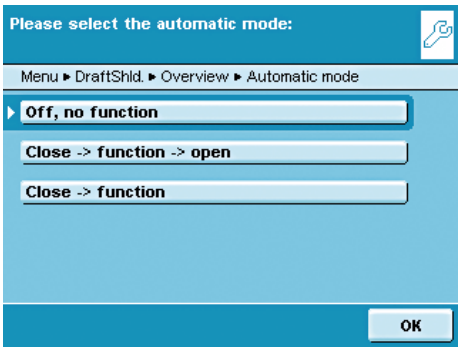


▶ Configure the automatic mode for the draft shield.
*Off, no function: Automatic mode is off.
Close > function > open: The draft shield doors are closed in automatic mode while the function is executed, and then the doors re-open.
Close > function: The draft shield doors are closed in automatic mode while the function is executed.

Automatic mode can be executed using the following keys:
- TARE key
- PRINT key
- Cal./Adj. key
- or can be executed when a component is saved for logging applications (statistics, formulation, totalization)

If automatic mode is on, the draft shield doors automatically close when the balance is switched to standby.

**Assigning Opening Functions to Keys (Learning Function)**
Example: The keys should be cross-configured (left key opens/closes right door and vice versa).
The balance must be turned on.
▶ Close all draft shield doors.
▶ Manually operate the door you want to assign to the left key: Push the right door open to the extent you want it to be opened (entirely or partially).
▶ Press the left key ▲▼.
▷ The door will close again. Now you have configured the left key so that when pressed, it opens or closes the right door.
▶ Proceed accordingly to configure the left door/right key.

According to the same pattern, you can assign operation of the upper door to one of the keys. You can also configure one key to move both doors by manually opening both doors during set up before you press the desired key.

## Installing the Ionizer (Optional)

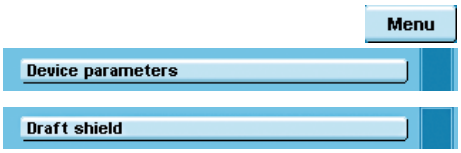


If your balance is equipped with an ionizer module, you can configure the basic settings for the ionizer module here. During any task, you can change these settings as needed.

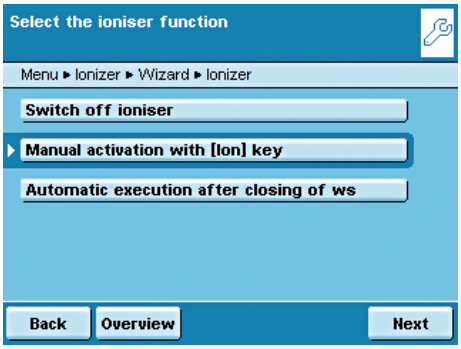


▶ Define the ionizer function.
Switch off ionizer: The ionizer is switched off.
Manual activation: Ionization can be turned on at any time by pressing the Ion key.
*Automatic execution after closing of ws: Ionization is executed automatically, as soon as the draft shield is closed.

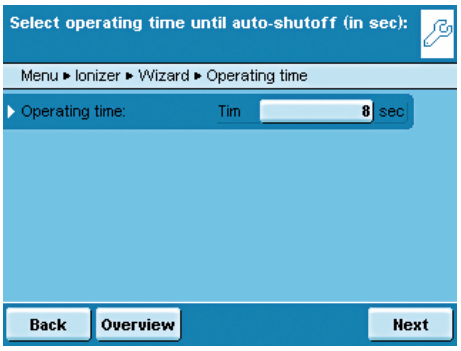


▶ Define how long an ionization routine should take.
**Operating time** in seconds: 3 to 15 sec, *8 sec.

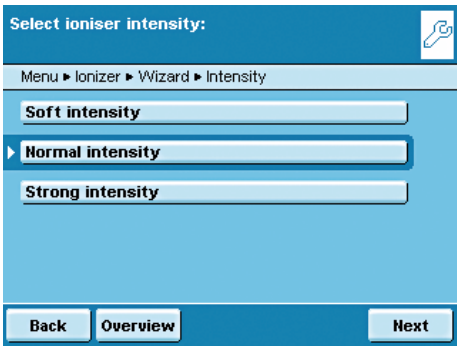


▶ Define the intensity level at which the ionizer operates.
**Soft**, ***Normal**, **Strong**

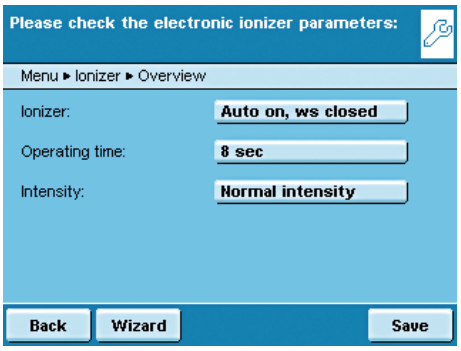


▶ Check and correct all settings as required.
▶ To save settings, touch **Save**.

# Task Management

In the Task management menu (TASK), you can:
– Start a task
– Configure a new task
– Edit an existing task (modify, copy, delete)

For **task** configuration, there are numerous **applications** available, e.g., weighing, parts counting, calculation. Each task contains at least one of these applications. However, it can also have a combination of several applications. Each application can be used either with their factory settings or you can also modify them as desired. The **Weighing** application is available as a basic function for every task. Each task also contains the individual balance settings and the individually configured printout.

The options available to you in Task Management depend upon your user access rights: An **Administrator** can use all options while a **User** can only use limited options (see "User Management" in the User Management chapter).
If no users have been defined, all options can be accessed with no restrictions.
A max. of 15 tasks (TASK) can be created.

The administrator can **create tasks with restricted use**, i.e., tasks that can only be used by certain users or only by the administrator.

**Global tasks** can be used by all users.
**Separate tasks** are only accessible to the users who created them.
Exception: A user can copy global tasks to use them afterwards as a local task.

| Option | Administrator | User |
|---|---|---|
| Configure, modify, delete separate tasks | | ☑ |
| Configure, modify, delete global tasks | ☑ | |
| Execute or copy separate tasks | | ☑ |
| Execute or copy global tasks | ☑ | ☑ |

**Selecting tasks:**

( ☰ ) ▶ To enter the Task Management, press the key **TASK** ( ☰ ).

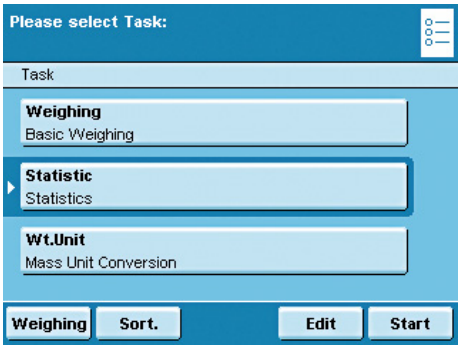


▷ A list of available tasks is displayed.
Initially, this overview is empty. Once tasks have been configured, they will be displayed here.

▶ When you touch **Start**, the task currently selected will be started (this can be identified by the dark background).

**Importing tasks:**
You can also load preconfigured tasks to the balance:
1) Unpack the desired ZIP archive file to the root directory (Root Dir) of an SD card after download from the Sartorius homepage or from the included CD.
2) In the Balance menu, submenu "Import/Export data":
Select "Import files from the SD card."
3) Insert the SD card into the balance.
4) Select the corresponding import file and load the task via **Next**. Then exit the menu.
5) Start the loaded task via the selection list.

## Using Applications with the Factory Settings

Each application comes with specific factory settings.
If you want to apply these settings unchanged, you can do this quickly during configuration:

▶ Open Task Management and touch **Edit.**

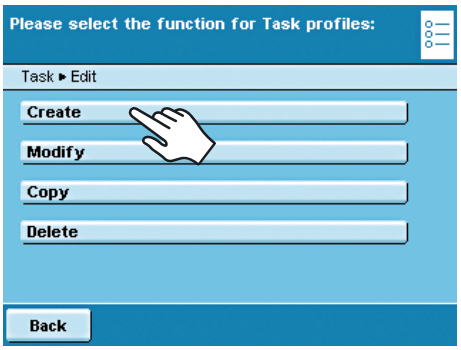


▶ Select **Create.**

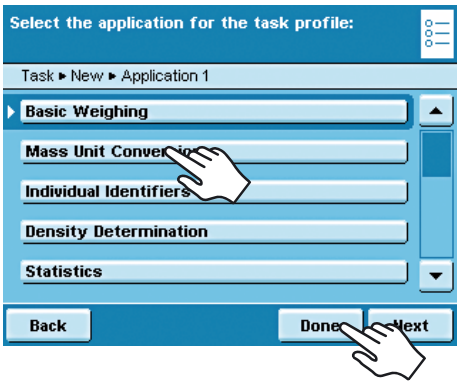


▷ An application list is displayed.
▶ Select the application you want to assign to the new task.
▶ Touch **Done**.

▶ Enter a name and a description for the task and then touch **Save**.
▷ The new task is saved with the factory settings and displayed in the task list.

### Sorting the Task List

New tasks are always added to the end of the task list. After you have configured several tasks, it may be helpful to sort the task list.

▷ The task selection is displayed.

▶ Touch **Sort**.
▷ The list is sorted alphabetically (A – Z).
▶ To reverse the sorting, re-touch **Sort**.
▶ To sort tasks by the date of last use, re-touch **Sort**.

## Creating New Tasks (Configuration)

The Cubis software contains the following applications that you can configure as a task to meet your own requirements:

- Weighing
- Mass unit conversion
- SQmin Minimum sample quantity (optional)
- Individual identifiers
- Density determination
- Statistics
- Calculation
- Averaging
- Draft shield (optional)
- Individual process (Q-App)
- Formulation
- Weighing in percent
- Timer-controlled functions
- Totalizing
- DKD measurement uncertainty (optional)
- Second tare (preset tare)
- Parts counting
- Checkweighing
- Ionizer (optional)

The basic process for task configuration is as follows:

1. Create new task.
2. Select application.
3. Review all of the following prompts and configure your own settings as required.
4. Perform steps 2 and 3 for additional applications if you would like to combine multiple applications.
5. Check settings for weighing and printouts and modify as required.
6. As Administrator, you define whether the new task can be used by all or only by certain users.
7. Enter a name and description for the new task.
8. Save task.

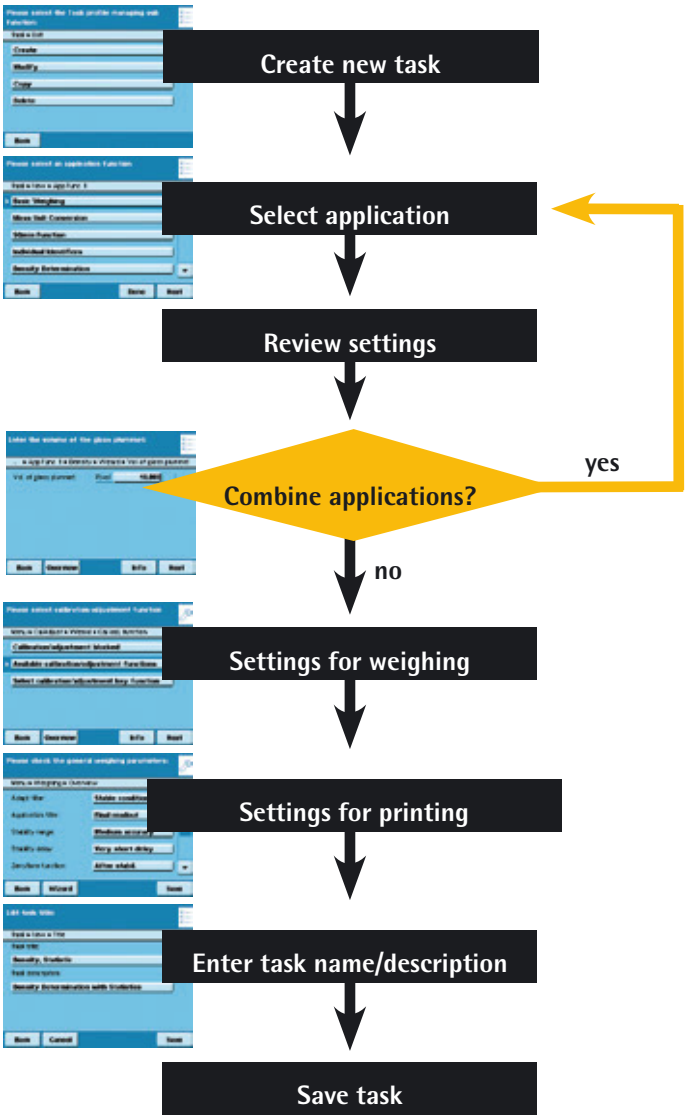

## Example: Creating a Task

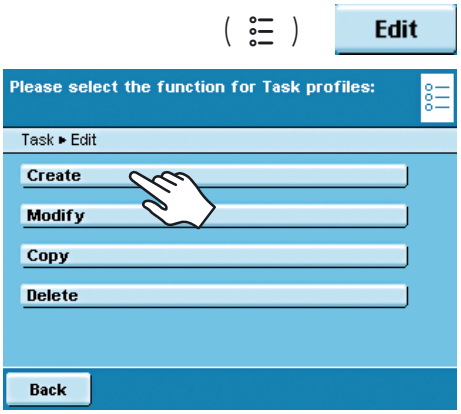


▶ Open Task Management and touch **Edit.**

▷ The list of options is displayed.
▶ To define a new task, touch **Create**.

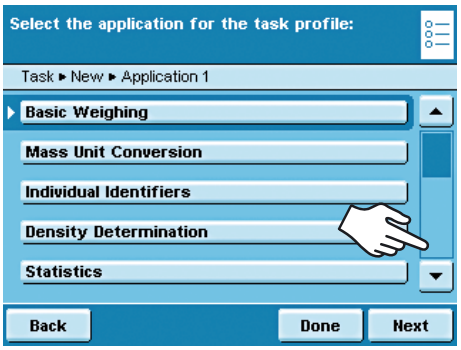


▷ An application list is displayed.
▶ To view all applications, use the scroll bar on the right.
▶ Select the application you want to assign to the new task.
▶ Configure this application as required. The program guides you through the configuration menu.
▶ If you want to assign additional applications to the task, these applications should also be configured (see Combining Applications into One Task).

▷ After all applications for the new task have been configured, the following parameters have to be set: Configure the settings for weighing and printouts. All settings make here will only affect **the new task**.

M

On balances verified for use in legal metrology, modification of some settings may limited or prohibited altogether.

### Settings for Weighing

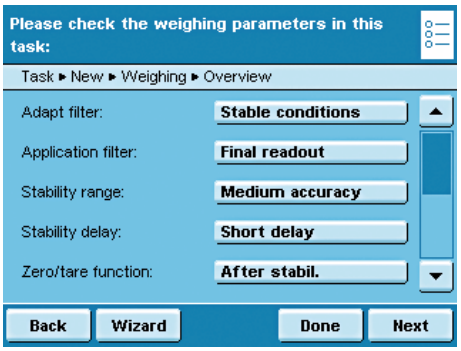


▶ Check all settings and change as required.

Explanations for the individual options can be found in the following section.

▶ Touch **Next**.

### Settings for Printouts

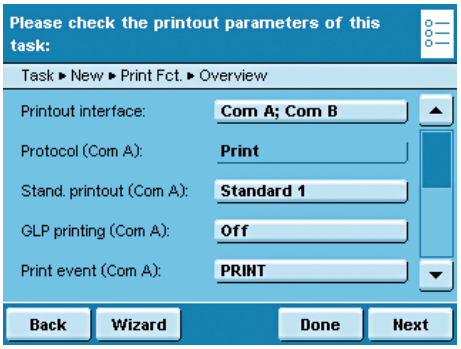


▶ Check all settings and change as required.

Explanations for individual options can be found in the following section.

▶ Touch **Next**.

▶ Enter a short name and a description for the new task.
▶ Touch **Save**.
▷ The task selection list with the new task is displayed.

## Configuring a Printout

You can configure the printout at two places; for example you can have the printout for basic weighing differ from all the other applications.

In System Settings (Menu) — In this menu, you define the basic settings. Previously created tasks will not be affected by modifications to the basic settings.

Creating Tasks — This is where you can specifically modify the user-defined settings for any task. You will be routinely prompted for the printer settings with every new task you create and can be modify them.

Printout (example):

| Print events: | Printout content (record) | Print elements |
|---|---|---|
| Start task | ----------<br>21.02.2011 09:17<br>SARTORIUS<br>Mod. MSA 224S<br>Ser.-Nr. 12-34-56<br>---------- | GLP header |
| Start task<br>In this example: | Laboratory<br>technician | Operator name |
| Start task | Product..... | ID1, identification: fixed/variable |
| ( ⎙ ) key | 123.5678g<br>---------- | Measured value |
| Exit task | 21.02.2010 09:20<br>Name:<br>---------- | GLP footer |

**Setting Options for Printouts**

The options for printouts depend on the how the interfaces and their operating modes are configured. So if not all options are available, check the interface configuration.

The configuration of standard printout parameters defines the following:

Interfaces for Printer Output — Peripheral port (Com A), USB/PC (Com B), optional interface (Com C), Ethernet (Com D)

Protocol (Operating Mode) — Depends on the interface: Print, SBI, xBPI, SICS

Output — Depends on the operating mode: Single printout or automatic (not with printer), with/without stability

Printout Criterion — Manual without stability, manual with stability

Format Autoprint — 22 characters for applications, 16 characters for raw data

Standard Data Output — Standard 1 (measured value only), Standard 2 (measured value and date/time), Standard 3 (date/time, weight block (N,T,G) and dotted line

GLP-compliant Printout — Turned off/on for Cal./adjust./Always On

Print Event — Defines which event should trigger a print job.
The selectable print events depend on the selected application.
For basic weighing: ( ⎙ ) key, start or end task, calibration/adjustment result
For calculating applications: Additionally, initialization and result
For logging applications: Additionally, component and evaluation

Print Elements — The elements to be printed also depend on the selected application. You define the print elements for each each event, e.g., date and time, dotted line, measured value and the sequence they should be printed in, etc.

Tare after Printing: — Turn off, on (auto. tare after printing)

### Configuring Printouts in the System Settings (Menu)

The settings can only be modified as long as no task has been activated (ready to start) in the operating mode. Make sure that basic weighing is active in the operating mode.

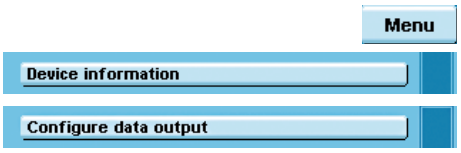


▶ Toggle to the System Settings menu.

▶ Open the **Configure data output** submenu.

If the submenu is not selectable, check the operating mode and select basic weighing.

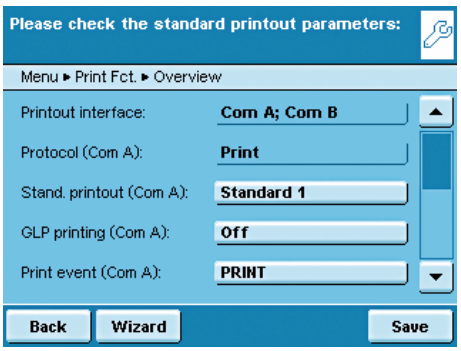


▷ The setting menu will open. Several options are not modifiable because they are preset by the interface configuration.

The initial default setting and several exemplary settings are described in the following.

### Standard Printout Parameters when the Balance Is first Delivered

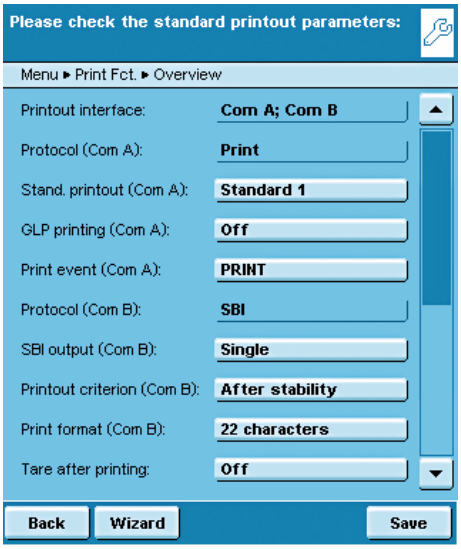


When the balance is first delivered, two interfaces are configured: The peripheral port (Com A) is configured for one printout, the USB interface (Com B) is configured for data with a PC per SBI protocol.

Interfaces: Com A (peripheral port) and Com B (USB/PC)
Protocol for Com A: Print (preset by the interface configuration)
Standard for output to Com A: Standard 1 (measured value only)
GLP-compliant printout to Com A: Off
Print event for output to Com A: Press the PRINT ( ) key
Element to be output via Com A: Measured value
Protocol to Com B: SBI (preset by the interface configuration)
SBI output to Com B: Single printout to the PC
Criterion for output to Com B: After stability of balance
Format for output to Com B: 22 characters
Tare after printing: Off

▶ You can select the variable parameters individually by clicking on the respective input field.

or

▶ To be guided step-by-step through the settings, use the wizard.

**Example:** **Manual Printout to Peripheral Port, SBI Operating Mode**

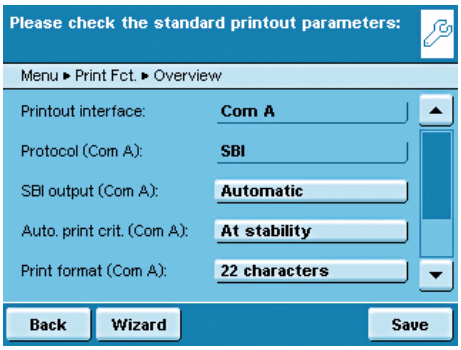


▷ After manual operation, you want an individual printout to be printed to the ported peripheral device.

Interface: Com A (peripheral port)
Protocol: SBI (toggling to the interface configuration possible)
SBI output: Individual printout
Criterion: Manual without stability
Format: 22 characters (for applications)
Tare after printing: Turned on or off

**Example:** **Automatic Printout to Peripheral Port, SBI Operating Mode**

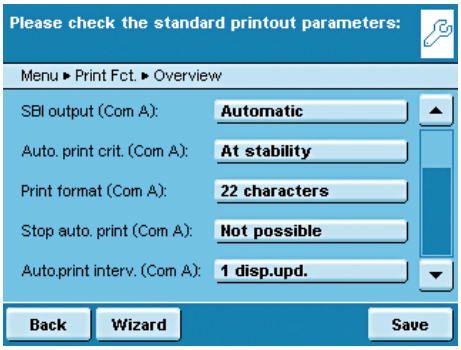


▷ At a preset interval, automatic printouts should be sent to the ported peripheral device.

Interface: Com A (peripheral port)
Protocol: SBI (toggling to the interface configuration possible)
SBI output: Automatic printout
Criterion: Without stability, at stability or after load change
Format: 22 characters (for applications)
Stop automatic printing: Not possible or by using the Print ( ) key.
Interval for automatic printing: Number of cycles (1, 2, 5, 10 to100) and 0.1, 0.2, 0.5 to 10 seconds.

**Example:** **Automatic Printout to Peripheral Port, Remote Display Operating Mode**

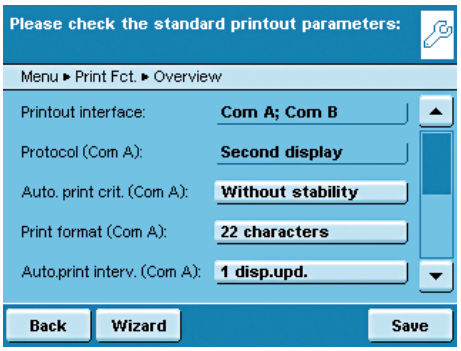


▷ At a preset interval, automatic printouts should be sent to the ported peripheral device as remote display.

Interface: Com A (peripheral port)
Protocol: Remote display (toggling to the interface configuration possible)
SBI output: Automatic printout
Criterion: Without stability, at stability or after load change
Format: 22 characters (for applications)
Interval for automatic printing: Display updates (1, 2, 5, 10 to100) or every 0.1, 0.2, 0.5 to 10 seconds.

**Example:** **Printout to Peripheral Port only using the PRINT ( ) Key, Printer Operating Mode**

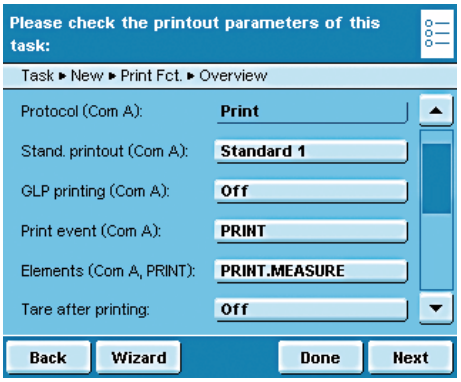


▷ After pressing the Print key, the measured value should be printed to the ported peripheral device.

Interface: Com A (peripheral port)
Protocol: Print (toggling to the interface configuration possible)
Standard data output: Standard 1 (measured value only), Standard 2 (measured value and date/time), Standard 3 (measured value with date/time and weight block)
GLP-compliant printout: Turned on or off
Print event: Press the PRINT key
Elements for the print event PRINT: Measured value PRINT.MEASURE
Tare after printing: Turned on or off

## Setting Options of Printout Parameters

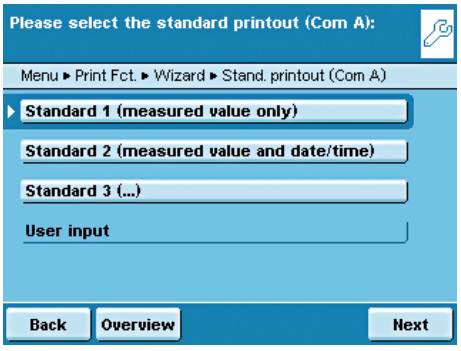


**Standard Data Output**
You can select which data should be printed out as default.
**Standard 1** (measured value only)
**Standard 2** (measured value with date/time)
**Standard 3** (measured value with date/time and weight block)
**User input** is only selectable if the standard settings have been modified by the user.

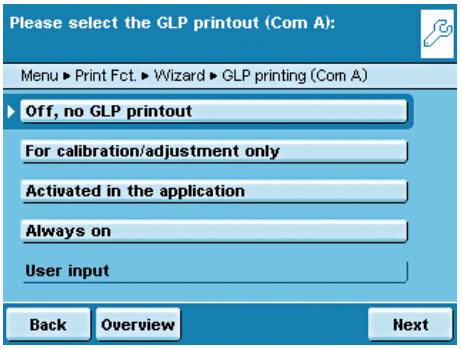


**GLP-compliant Printout**
You can select if and when the printout should be GLP-compliant.
**Off, no GLP printout**
**For calibration/adjustment only**
**Activated in the application**
**Always on**
**User input** is only selectable as long as none of the three options apply: i.e., if only a GLP header but not a GLP footer has been configured.

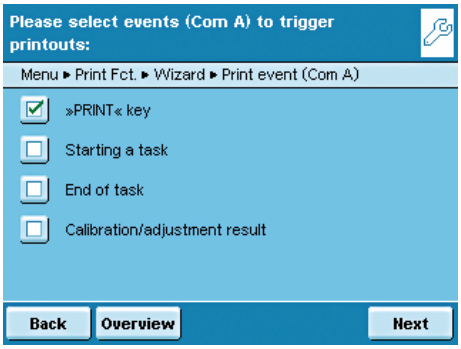


**Print Events**
You can define one or several events that trigger a printout. The number of selectable print events depends on the selected application.
**Basic Weighing:**
**Press the PRINT key**
**Starting a task**
**End of task**
**Calibration/adjustment result**, after calibration/adjustment

For **calculating applications** the following is **additionally** possible:
**Initialization**
**Result**

For **logging applications** the following is **additionally possible**:
**Component**
**Evaluation**
The application-specific print events cannot be configured in the Basic menu but only when you create a new task.

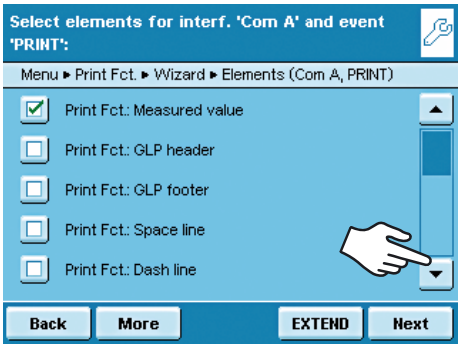


**Print Elements**
Which information should be printed?
**Measured value**
**GLP header**
**GLP footer**
**Space line**
**Dash line**
**Form feed**
**Date and time**
etc.

▶ To scroll through the extensive list, slide the right scroll bar downwards.

▶ To view the complete list, touch **EXTEND**.

▶ To minimize the list, touch **Reduce.**

▶ To reset to default, touch **Standard**.

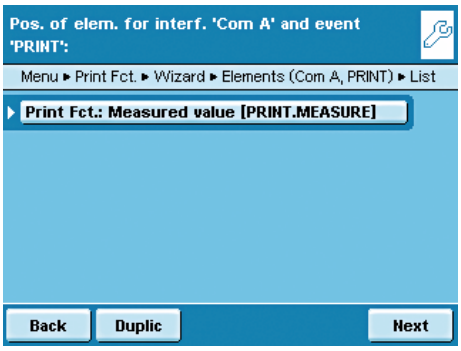


**Sequence of Print Elements**
In which order should the print elements be printed?

▷ The list of selected print elements is displayed.
You can change the order and can duplicate individual elements, for multiple printouts (e.g., at the beginning and end of the list).

▶ Mark the element that you wish to move or duplicate.

▶ To duplicate the element, touch **Duplic**.

▶ To move the element downwards in the list, touch **Down**.

▶ To move the element upwards in the list, touch **Up**.

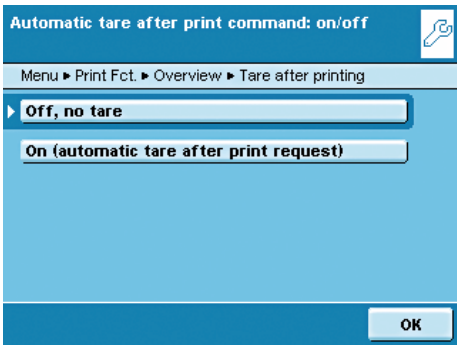


**Automatic Tare after Printing**
Should the balance be tared automatically after each printout?
**Off, no tare**
**On (automatic tare after print request)**

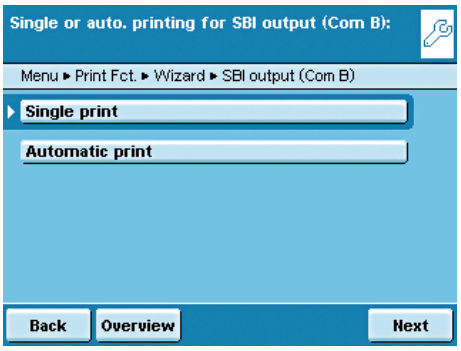


**Setting Options for SBI Output**
**SBI Output Mode**
How should SBI printout be output?
**Single print**: Printout generated by pressing the PRINT ( ) key or by ESC command via the interface
**Automatic print**: The printout is generated automatically in the weighing cycle

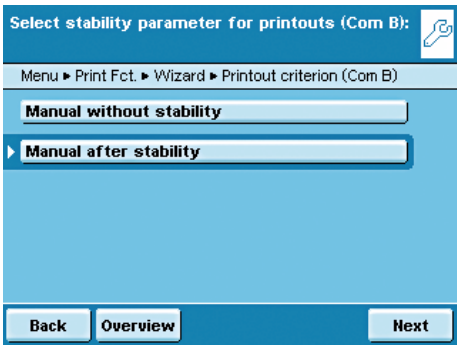


**Stability Parameter for Printout**
Should the printout be dependent on balance stability?
**Manual without stability**: Immediate printout without waiting.
**Manual after stability**: Printout generated immediately at stability, otherwise not until after next stability.

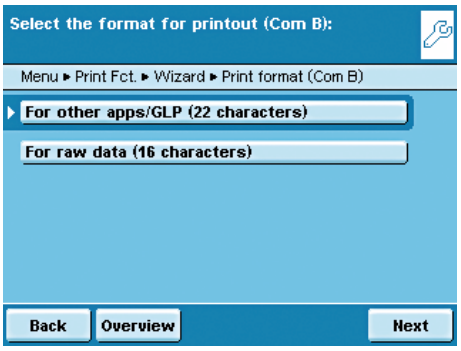


**Format for Printout**
How should the printout be formatted?
**For other applications (22 characters)**: Printout with header; 20 characters plus line break (CR) and dotted line (LF)
**For raw data (16 characters)**: Printout without header; 14 characters plus line break (CR) and dotted line (LF)

## Combining Applications into One Task

You can combine applications that are saved in the balance into one task. The following rules need to be followed (see table below):

- An application can only be combined with applications from **different groups**.
- You can only combine the applications of the first three groups in the given **order**, e.g., weighing with checkweighing and totalizing. The sequence weighing, totalizing and checkweighing is not possible.
- The applications of the **Additional Functions** group can be combined freely, the order is not relevant in this case.

When you combine applications, the Cubis software automatically suggests only those applications that follow the corresponding rules.

| Application group | Application | Weighing | Mass unit conversion | SQmin function | Individual identifiers | Density determination | Statistics | Calculation | Averaging | Formulation | Weighing in percent | Timer-controlled actions | Totalizing | DKD measurement uncertainty | Second tare memory | Parts counting | Checkweighing | Draft shield (optional) | Ionizer (optional) | Q-App (optional) |
|---|---|---|---|---|---|---|---|---|---|---|---|---|---|---|---|---|---|---|---|---|
| Calculating applications | Weighing | ❍ | ◆ | ◆ | ◆ | ◆ | ◆ | ◆ | ◆ | ◆ | ◆ | ◆ | ◆ | ◆ | ◆ | ◆ | ◆ | ◆ | ◆ | ◆ |
| | Density determination | ◆ | ● | x̄ | ● | ❍ | ● | ❍ | ❍ | ❍ | ❍ | ❍ | ❍ | x̄ | ● | ❍ | ❍ | ● | ● | ❍ |
| | Calculation | ◆ | ● | x̄ | ● | ❍ | ● | ❍ | ❍ | ❍ | ❍ | ● | ● | x̄ | ● | ❍ | ● | ● | ● | ❍ |
| | Averaging | ◆ | ● | ● | ● | ❍ | ● | ❍ | ❍ | ❍ | ❍ | ❍ | ● | ● | ● | ❍ | ● | ● | ● | ❍ |
| | Weighing in percent | ◆ | ● | x̄ | ● | ❍ | ● | ❍ | ❍ | ● | ❍ | ● | ● | x̄ | ● | ❍ | ● | ● | ● | ❍ |
| | Parts counting | ◆ | ● | x̄ | ● | ❍ | ● | ❍ | ❍ | ❍ | ❍ | ❍ | ● | x̄ | ● | ❍ | ● | ● | ● | ❍ |
| Checking applications | Timer-controlled actions | ◆ | ● | ● | ● | ❍ | ● | ● | ❍ | ❍ | ● | ❍ | ❍ | ● | ● | ❍ | ❍ | ● | ● | ❍ |
| | Checkweighing | ◆ | ● | ● | ● | ❍ | ● | ● | ● | ❍ | ● | ❍ | ● | ● | ● | ● | ❍ | ● | ● | ❍ |
| Logging applications | Statistics | ◆ | ● | ● | ● | ● | ❍ | ● | ● | ❍ | ● | ● | ❍ | ● | ● | ● | ● | ● | ● | ❍ |
| | Formulation | ◆ | ● | ● | ● | ❍ | ❍ | ❍ | ❍ | ❍ | ● | ❍ | ❍ | ● | ● | ❍ | ❍ | ● | ● | ❍ |
| | Totalizing | ◆ | ● | ● | ● | ❍ | ❍ | ● | ● | ❍ | ● | ❍ | ❍ | ● | ● | ● | ● | ● | ● | ❍ |
| Additional functions | Mass unit conversion | ◆ | ❍ | ● | ● | ● | ● | ● | ● | ● | ● | ● | ● | ● | ● | ● | ● | ● | ● | ❍ |
| | SQmin function | ◆ | ● | ❍ | ● | x̄ | ● | x̄ | x̄ | ● | x̄ | ● | ● | ● | ● | x̄ | ● | ● | ● | ❍ |
| | Individual Identifiers | ◆ | ● | ● | ❍ | ● | ● | ● | ● | ● | ● | ● | ● | ● | ● | ● | ● | ● | ● | ❍ |
| | DKD measurement uncertainty | ◆ | ● | ● | ● | x̄ | ● | x̄ | x̄ | ● | x̄ | ● | ● | ❍ | ● | x̄ | ● | ● | ● | ❍ |
| | Second tare memory | ◆ | ● | ● | ● | ● | ● | ● | ● | ● | ● | ● | ● | ● | ❍ | ● | ● | ● | ● | ❍ |
| | Draft shield (optional) | ◆ | ● | ● | ● | ● | ● | ● | ● | ● | ● | ● | ● | ● | ● | ● | ● | ❍ | ❍ | ● |
| | Ionisator (optional) | ◆ | ● | ● | ● | ● | ● | ● | ● | ● | ● | ● | ● | ● | ● | ● | ● | ❍ | ❍ | ● |
| Individual processes | Q-App (optional) | ◆ | ❍ | ❍ | ❍ | ❍ | ❍ | ❍ | ❍ | ❍ | ❍ | ❍ | ❍ | ❍ | ❍ | ❍ | ❍ | ● | ● | ❍ |

- ◆ Weighing is always available
- ● Combination possible
- x̄ Combination possible is only activated as long as no calculating application is active
- ❍ No combination with identical application possible
- ❍ No combination with an application of the same group possible
- ❍ No combination possible because it is not meaningful

## Executing Tasks

After all required settings have been configured, you can now start and execute a task.

( ☰ ) ▶ If you haven't already done so, go to Task Management.

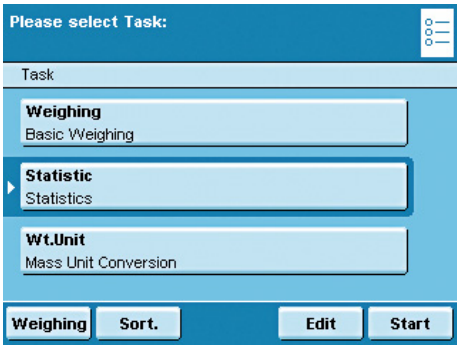


▷ The task selection is displayed.
▶ Touch the desired task.

or

▶ If the desired task is already selected (dark background and arrow on the left), touch **Start**.
▷ The program switches to operating mode and the selected task is activated.
▶ Follow the instructions on the display.

# Weighing

Purpose: Weight determination within the scope of the device-specific weighing capacity (see Specifications).

Combination options: Mass unit conversion, second tare memory and individual identifiers, (SQmin function, DKD measurement uncertainty).

## Configure Task: My Weighing

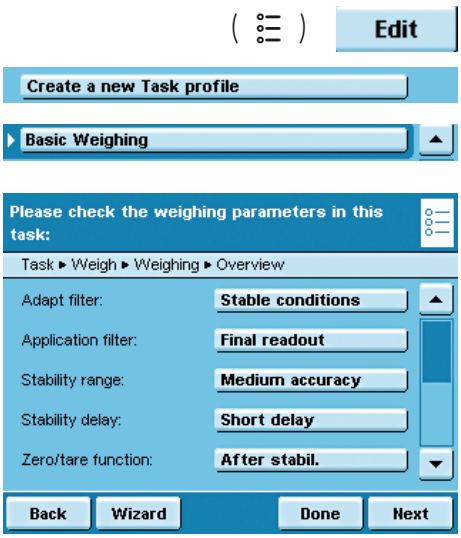


Weighing without combining it another application:

▷ The settings for **Weighing** are displayed.
▶ Check all settings and change as required.
▶ Touch **Next**.
▷ The settings for **Printouts** are displayed.
▶ Check all settings and change as required.
▶ Touch **Next**.
▶ If you are administrator: You define whether all or only individual users may use this task.
▶ Touch **Next**.
▶ Enter a short name and a description for the new task (e.g., “My Weighing”).
▶ To save the new task, touch **Save**.

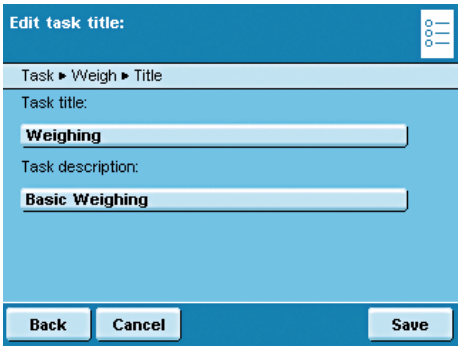


## Execute Task: My Weighing

▶ If you haven’t already done so, go to Application Management.
▷ The task selection is displayed.
▶ Touch the desired task.

or

▶ If the desired task is already selected, press **Start**.
▷ The program switches to the operating mode, and the task is activated.

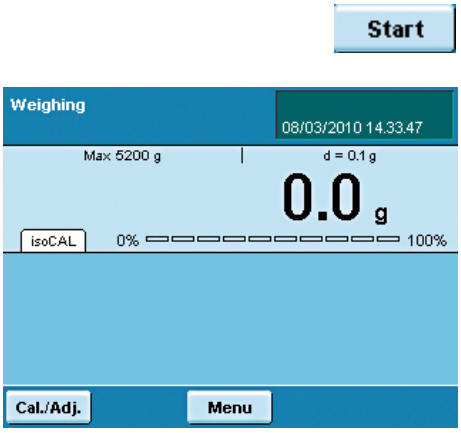

# Mass Unit Conversion

Purpose: The weight value can be displayed in up to a maximum of five different units in succession (see table below). However, the desired weight units must be assigned beforehand (1 through 5).

Combination options: Second tare, (SQmin function, DKD measurement uncertainty)

M Not all units programs can be selected on balances used as legal measuring instruments. The user can only switch between metric units (e.g., milligram, gram, kilogram) (also model-specific).

## Conversion Factors for Weight Units

| Unit | Factor | Display |
|---|---|---|
| Gram | 1.00000000000 | g |
| Kilogram | 0.00100000000 | kg |
| Carats | 5.00000000000 | ct |
| Pounds | 0.00220462260 | lb |
| Ounce | 0.03527396200 | oz |
| Troy ounce | 0.03215074700 | ozt |
| Hong Kong taels | 0.02671725000 | tlh |
| Singapore taels | 0.02645544638 | tls |
| Taiwan taels | 0.02666666000 | tlt |
| Grains | 15.43235835000 | GN |
| Pennyweight | 0.64301493100 | dwt |
| Milligram | 1000.00000000000 | mg |
| Parts per pound | 1.12876677120 | /lb |
| Chinese taels | 0.02645547175 | tlc |
| Mommes | 0.26670000000 | mom |
| Carats | 5.00000000000 | ct |
| Tola | 0.08573333810 | tol |
| Baht | 0.06578947437 | bat |
| Mesghal | 0.21700000000 | MS |
| Ton | 0.00000100000 | t |
| Pound:Ounce | 0.03527396200 | lb:oz |
| Newton | 0.00980665000 | N |
| Microgram | 1000000.00000000000 | µg |

## Configure Task: Mass Unit Conversion

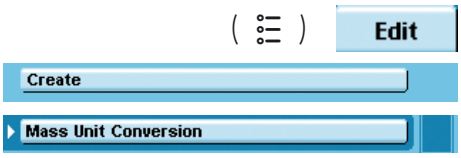


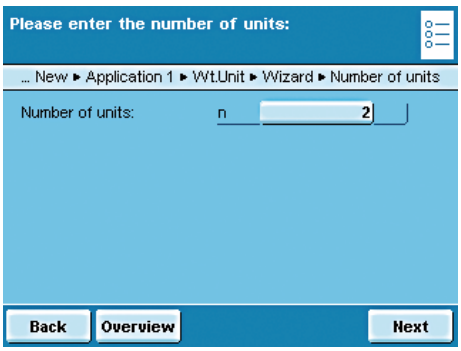


▶ Select the desired number of units (max. 5) to be used to display the weighing results.

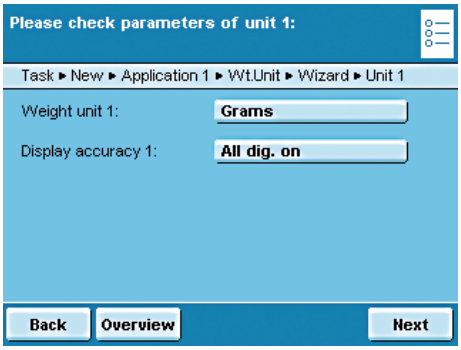


▷ Now you will be prompted to enter the display accuracy and weight units of all the desired units one by one.
▶ Select the **Weight unit** (e.g.,. gram, kilogram, carat, pound) for the first unit.

▶ Select the **Display accuracy**: (e.g., complete display of all decimal places or leave off last place).

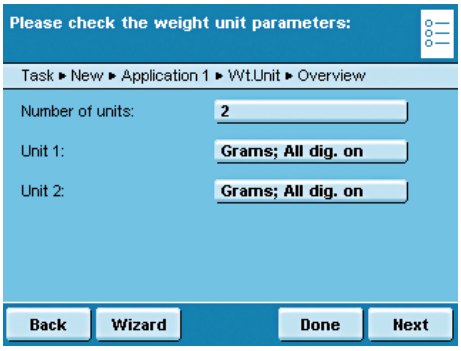


▷ An overview of all settings is displayed.
▶ Check settings and change as required.

▷ A message asks whether you would like to add another application.
▶ If required, select additional applications to be combined.

▷ Now you will be prompted to configure the weighing and printing functions.
▶ Check all settings and change as required.
▶ Enter a short name and a description for the new task.
▶ To save the new task, touch **Save**.

## Execute Task: Mass Unit Conversion

( ☰ )

▶ If you haven't already done so, go to Application Management.
▷ The task selection is displayed.
▶ Touch the desired task.

or

▶ If the desired task is already selected, press **Start**.

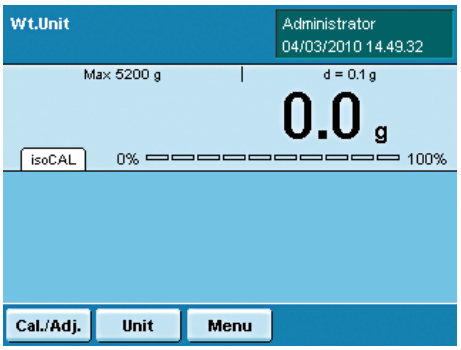


▶ Follow the instructions on the display.

▶ To change the displayed unit, touch **Unit**.

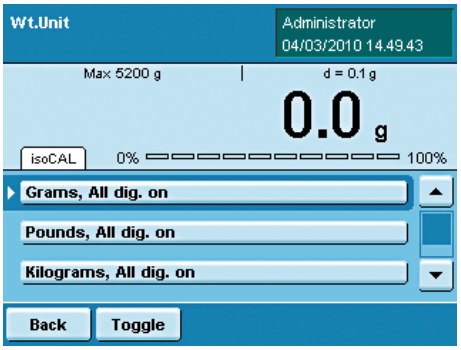


▶ Select the unit to be used to display the weighing results.
This setting remains in effect until you change the selection or end the task.

▶ To display weighing results in all units, touch **Toggle**.

# Minimum Sample Quantity SQmin

Purpose: This application is used to compare the measured weight value directly with the defined minimum sample quantity (SQmin = sample quantity minimum). This ensures that weighing results are within tolerances defined by your quality assurance system. This fulfils the requirements of United States Pharmacopeia (USP). According to USP guidelines, the measurement uncertainly can be a max. of 0.1% related to the initial weight when weighing substances for quantitative analyses.

Requirements: The balance must be set up by a service technician to be able to use the SQmin function. The technician will determine the permitted minimum sample quantity and load this to your balance using the guidelines of your QA system. He will document this setting via a “Weighing module test as per USP” certificate in which the measurements and min. sample quantity are logged. The SQmin function ensures that the weighing results correspond to USP guidelines.

Combination options: Mass unit conversion, second tare memory, individual identifiers, (DKD measurement uncertainty)

## Configure Task: Minimum Sample Quantity SQmin

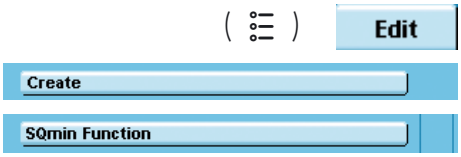


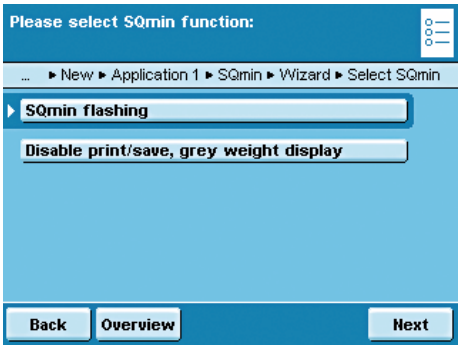


▶ Select which function should be triggered for minimum sample quantity.
**SQmin flashing**: The SQmin tab flashes.
**Disable print/save...**: Printout and saving of the weight value are disabled; the weight value is displayed in gray.

▷ An overview of all settings is displayed.
▶ Check all settings and change as required.

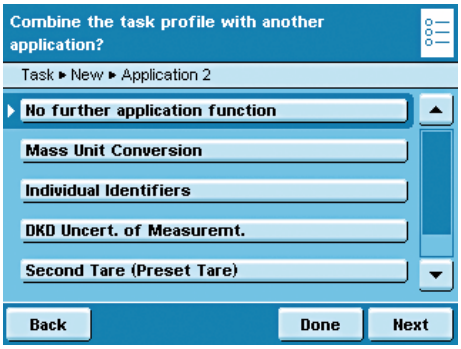


▷ A message asks whether you would like to add another application.
▶ If required, select additional applications you would like to combine.

▷ Now you will be prompted to configure the weighing and printing functions.
▶ Check all settings and change as required.
▶ Enter a short name and a description for the new task.
▶ To save the new task, touch **Save**.

## Execute Task: Minimum Sample Quantity SQmin

( ☰ )

▶ If you haven't already done so, go to Application Management.
▷ The task selection is displayed.
▶ Touch the desired task.

or

Start

▶ If the desired task is already selected, press **Start**.

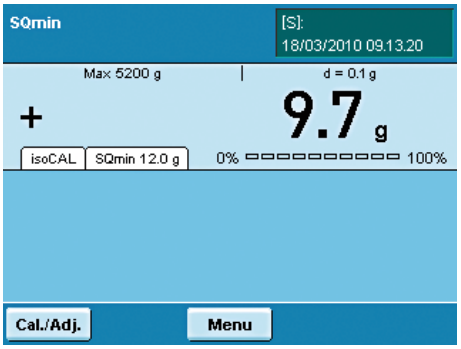


▷ When you start a task with the SQmin function, the defined SQmin value is shown on the display.

▷ As long as the weight value is lower than the SQmin value, the tab "SQmin" will flash.

# Individual Identifiers

Purpose: You can define identifiers for the following print jobs:
- Printout by pressing PRINT
- Task start
- Task end
- Initialization (for calculating applications only)
- Result (for calculating applications only)
- Component (for logging applications only)
- Evaluation (for logging applications only)

These identifiers are also printed in the log.

Combination options: Second tare, (SQmin function, DKD measurement uncertainty)

Example: You want to configure the application as follows:
- You want the printout to be activated with the PRINT key.
- You want to configure the application so that four identifiers are included in the printed log, i.e., your company address in three lines and the batch number in one line.
- The batch number is to be counted up automatically.

## Configure Task: Individual Identifiers

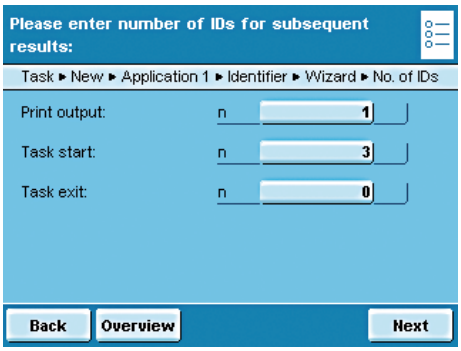


▶ Enter the desired number of individual IDs that you want to set up.
**Print output**: Identifier for the Print key
**Task start, task exit**: Number of identifiers for task start or task end.

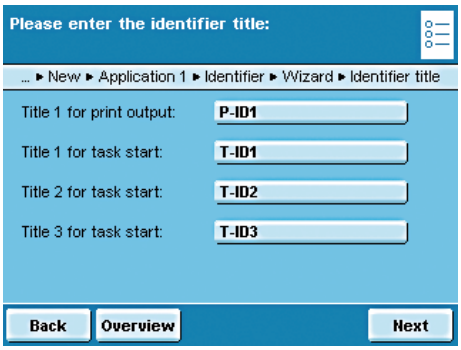


▷ The corresponding ID (P-ID1, T-ID1, T-ID2, etc.) will be displayed for each identifier.
▶ Enter the desired title for each **ID**.

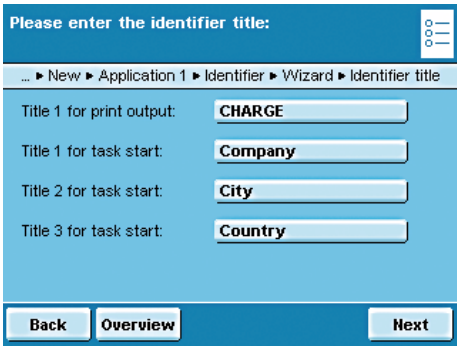


▷ In the example, a unique title has been defined for each identifier.

▷ Enter the desired value (text) for each **identifier**.

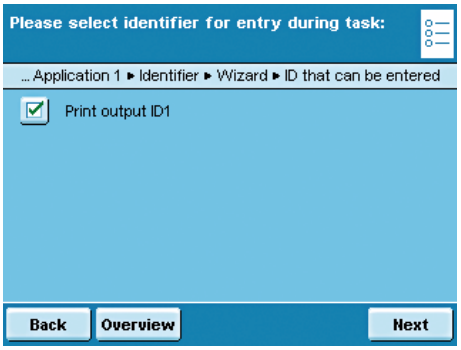


▶ Select the identifiers that can be entered for executing the task.

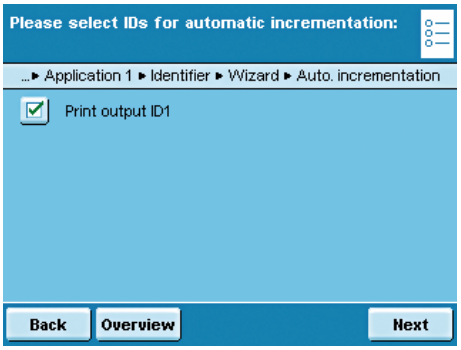


▶ Select whether or not the variable identifiers should be counted up automatically.

▷ In the example, the identifier for printout ID1 should be enterable and be counted up automatically.

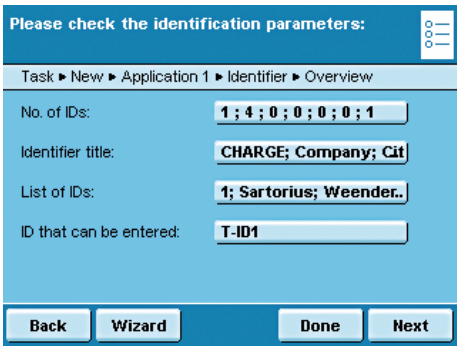


▷ An overview of all settings is displayed.

▶ Check all settings and change as required.

▷ Now you will be prompted to configure the weighing and printing functions.

▶ Check all settings and change as required.

▶ Enter a short name and a description for the new task.

▶ To save the new task, touch **Save**.

## Execute Task: Individual Identifiers

( ☰ )

▶ If you haven't already done so, go to Application Management.
▷ The task selection is displayed.
▶ Touch the desired task.

or

Start

▶ If the desired task is already selected, press **Start**.

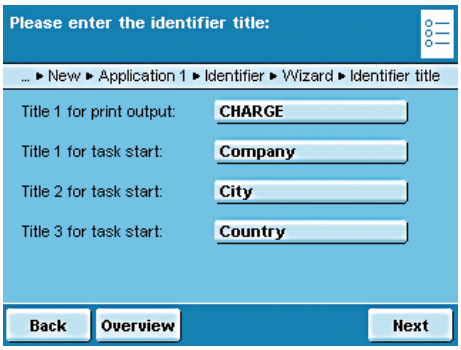


▷ The defined identifiers are displayed (cf. example above).
▶ Touch **Next**.

▷ Now the predefined lines are printed when the task starts:

```
Company:    Sartorius
Street:
    Weender Landstr.
City:      Goettingen
```

( 🖹 )

▶ Place the sample on the weighing pan and press the PRINT key (🖹).
▷ The identifier for the printout is displayed and can be changed, if necessary.
▷ In the example, CHARGE (batch) was defined for the printout.
▶ If required, you can change this value now.
▶ Touch **Next** or the PRINT key (🖹) once more.

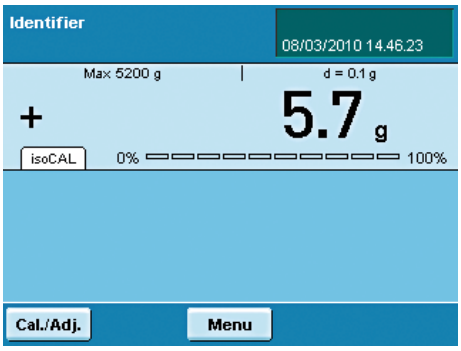


▶ To log the value, press the Print (🖹) key.

▷ The complete printout looks like this:

```
Company:    Sartorius
Street:
    Weender Landstr.
City:      Goettingen
N      +    214.5 g
CHARGE              1
N      +    213.3 g
CHARGE              2
```

# Density Determination

| | |
|---|---|
| Purpose: | You can determine the density and volume of liquid, solid or pasty materials. |
| Combination options: | Checkweighing, statistics, second tare or individual identifiers. |
| Requirements: | You require the Sartorius YDK01MS density determination kit or your own customer-specific set. The basic calculations for density determination are described at the end of this chapter. |
| Features | *= Factory setting |
| | **Liquid** |
| *Water: | for density determination using water; the density for the corresponding temperature is calculated automatically |
| Ethanol: | for density determination using ethanol; the density for the corresponding temperature is calculated automatically |
| Individual entry: | for density determination using another liquid, enter liquid and its density for corresponding temperature |
| Density at 20°C and coefficient: | for density determination using another liquid, enter density at 20°C and the coefficients of expansion, the density for the corresponding temperature is calculated automatically. |
| | **Air density** |
| *Air density at 20°C: | for measurement under standard laboratory conditions |
| Individual entry: | for measurement under other conditions, enter air density |
| | **Decimal places** |
| None: | The measurement value is displayed without decimal places. |
| 1, *2, 3 or 4 places: | The measurement value is displayed with the selected number of decimal places. |

You can choose from **four methods** for density determination:
- Determine density of liquid (with glass plummet)
- Determine density via buoyancy with Sartorius YDK01MS density determination kit (for solid samples)
- Determine density via displacement (for solid samples)
- Determine density via pycnometer (for liquid, pasty and powder samples)

## Configure Task: Determine the Density of a Solid

You can choose from two methods to determine the density of a solid: **Buoyancy** or **Displacement**.

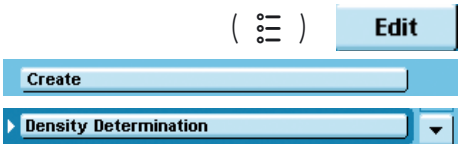


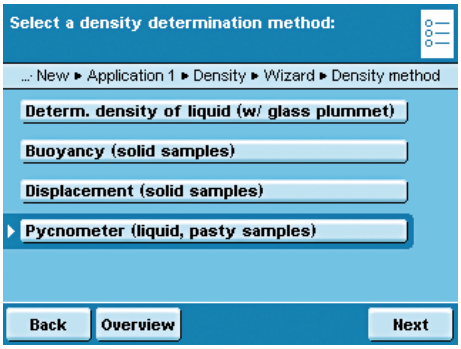


▶ Select the method that you want to use: buoyancy or displacement.

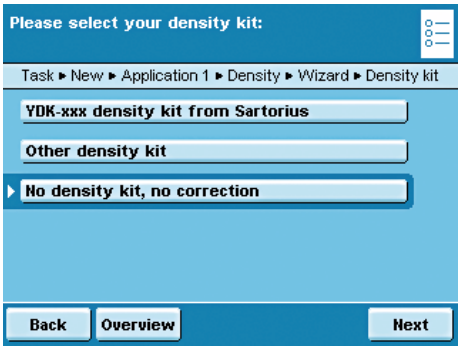


▶ Select the density kit you want to use.
**YDK-xxx density kit from Sartorius:** For measuring with the YDK kit
**Other density kit**: If you want to use another kit
**No density kit, no correction**: If you do not want to use any kit.
▶ Select or enter the prompted values (for explanations see **Features** on page 79).

**Additional Prompts/Settings for Another Determination Kit**
*= Factory setting
Parameters for the density kit

| | |
|---|---|
| Name: | Enter a name |
| No. of wires: | Enter the number of wires for the density kit that are immersed into the liquid. |
| Wire diameter: | Enter wire diameter (in mm) |
| Vessel diameter: | Enter vessel diameter (in mm) |

## Configure Task: Determine Density Using a Pycnometer

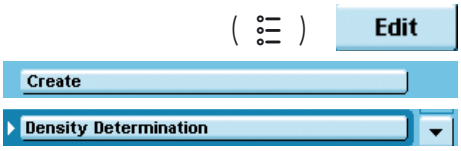


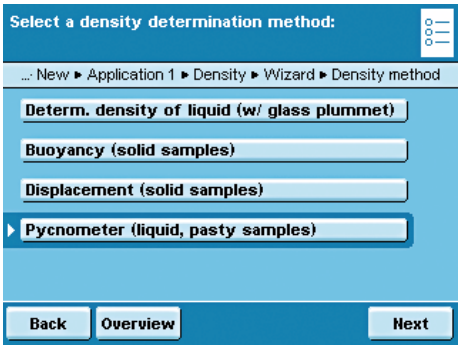


▶ Select the **Pycnometer** method.
▶ Select or enter the prompted values (for explanations see **Features** on page 79).

## Configure Task: Determine Density of Liquid

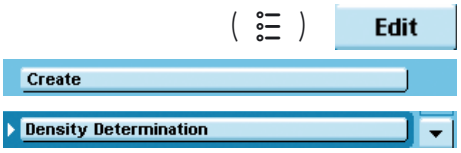


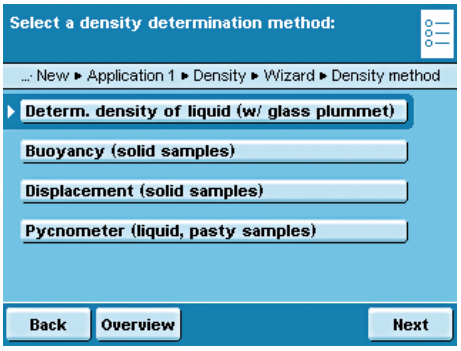


▶ Select **Determine density of liquid**.

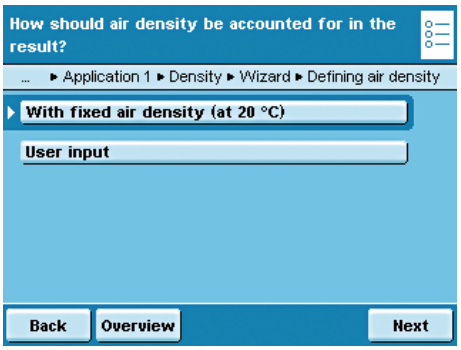


▶ Select the measurement conditions.
**With fixed air density (at 20°C)**: Measurement takes place under standard laboratory
conditions (20°C room and material temperature).
**User input**: If the measurement is to take place under deviating conditions.

▶ Enter the required values.

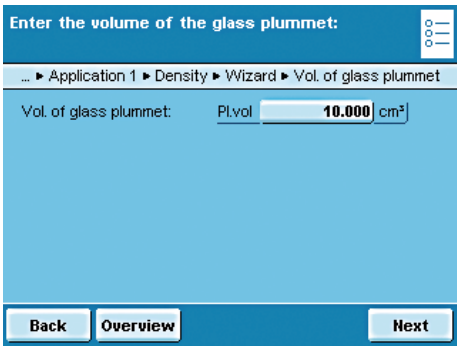


▶ Enter the volume of the glass plummet.

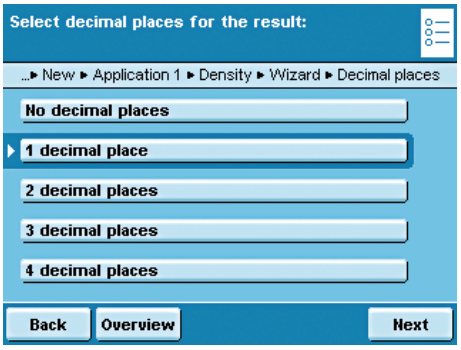


▶ Select the number of decimal places to be used for the density results.

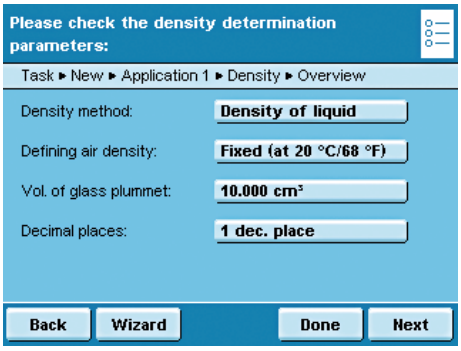


▶ Check all settings in the overview and change individual parameters as required.

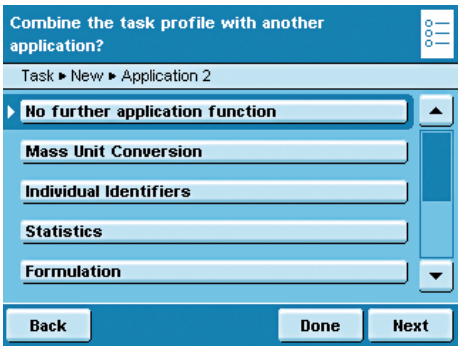


▷ An overview of all settings is displayed.
▶ Check all settings and change as required.

▷ A message asks whether you would like to add another application.
▶ If required, select additional applications to be combined.

▷ Now you will be prompted to configure the weighing and printing functions.
▶ Check all settings and change as required.
▶ Enter a short name and a description for the new task.
▶ To save the new task, touch **Save**.

## Execute Task: Density Determination

( ☰ )

▶ Prepare the density determination kit that you want to use.
▶ If you haven't already done so, go to Application Management.
▷ The task selection is displayed.
▶ Touch the desired task.

or

Start

▶ If the desired task is already selected, press **Start**.

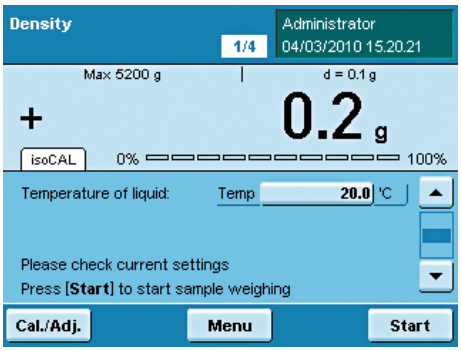


▷ The program switches to operating mode.
▶ Follow the instructions on the display.

## Calculation Basis for Density Determination

The density determination application is based on the equations:

**Rho** Density of sample (ρ)
$\rho_{fl}$ Density of buoyancy liquid
$W_a$ Weight of sample in air
$W_{fl}$ Weight of sample in liquid (for determining density of liquids, buoyancy and displacement)
Weight of fill medium (for pycnometer)
$W_r$ Weight of sample and fill medium (for pycnometer)
**LA** Air buoyancy correction = 0.0012 g/ccm

**Buoyancy:** $\mathbf{Rho = (W_a * (\rho_{fl} - LA)) / ((W_a - W_{fl}) * corr) + LA}$

**Displacement:** $\mathbf{Rho = (W_a * (\rho_{fl} - LA)) / (W_{fl} * corr) + LA}$

When the displacement method is used to correct for buoyancy by means of a wire (string) suspended in liquid, the factor 1.00000 is used in the calculation as factory-set default.

The correction factor **Corr** is calculated from: $\mathbf{Corr = 1 - n * d^2 / D^2}$
with:
**n** No. of wires:
**d** Wire diameter (YKD01MS: 0.7 mm)
**D** Inner diameter of the vessel being used (YKD01MS: 76 mm)

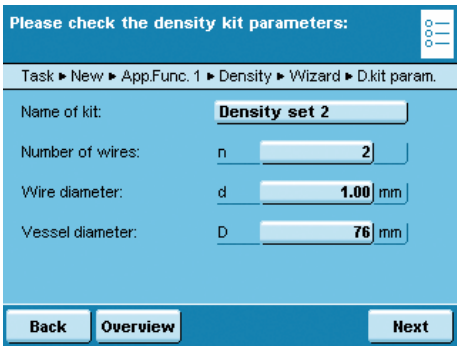


When other vessels or other submersion assemblies are used, this factor can be changed by modifying the parameters for the density kit.

# Statistics

Purpose: Saving and statistical analysis of weight values and other calculated values.
The values are generated as results:
- Transaction counter
- Sum of all values
- Average value
- Standard deviation
- Lowest value (minimum)
- Highest value (maximum)
- Difference between maximum and minimum

Options: You can save a maximum of 65535 components.

Combination options: Density determination, calculation, averaging, weighing in percent, parts counting, timer-controlled functions, checkweighing, mass unit conversion, second tare memory, individual identifiers (SQmin function, DKD measurement uncertainty)

## Configure Task: Statistics

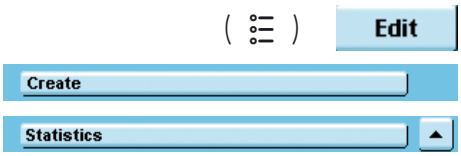


* = factory setting

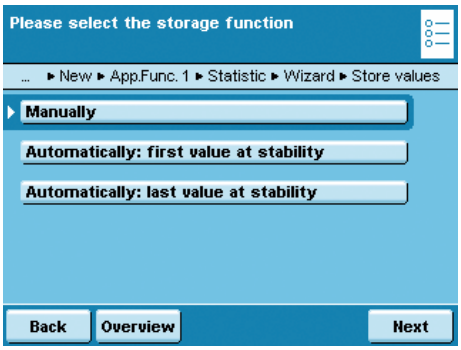


▶ Define how the weight value will be applied.
***Manually**: The weight value is applied as soon as the corresponding button is touched.
**Automatically: first value at stability:** The weight value is applied automatically as soon as the balance has stabilized after filling and the value exceeds the minimum load.
**Automatically: last value at stability:** The last weight value with stability is applied automatically, as soon as the balance is unloaded and the value falls short of the minimum load. If stability was reached repeatedly between measurements, the last stable weight value will be stored.
You must now select the minimum load to be applied:
**(none, 10, 20, ...*100 ... 1000 digits).**

**Weighing Mode with Automatic Storage:**

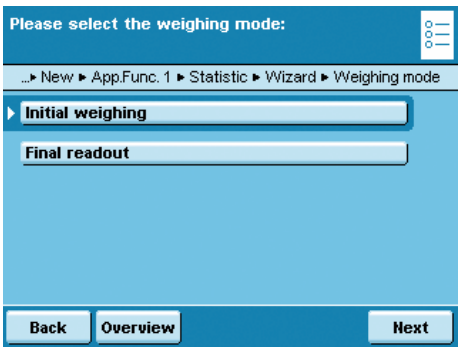


▶ Select the weighing mode to be used for the weight values.
**Initial weighing**: Initial weighing of samples in a container.
**Final readout:** Final weighing of samples in a container.

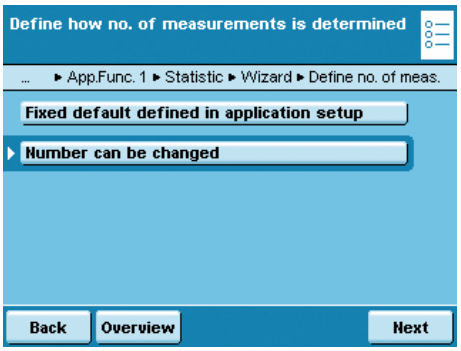


▶ Define when the number of measurements (items) will be defined.
**Fixed default defined in application setup:** The item number is defined beforehand.
**Number can be changed:** Enter the item number when you execute the task.

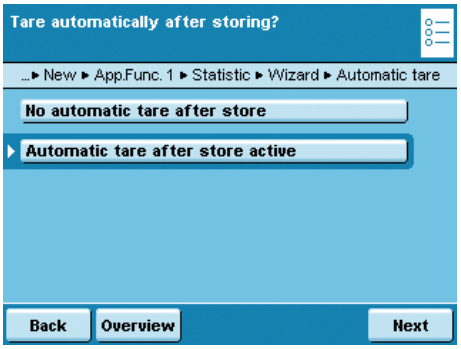


▶ Define whether or not automatic taring takes place after the transfer.

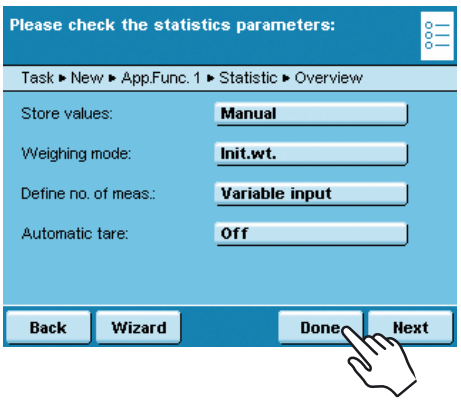


▷ An overview of all settings is displayed.
▶ Check all settings and change as required.

▷ A message asks whether you would like to add another application.
▶ If required, select additional applications to be combined.

▷ Now you will be prompted to configure the weighing and printing functions.
▶ Check all settings and change as required.
▶ Enter a short name and a description for the new task.
▶ To save the new task, touch **Save**.
▷ The new task is saved with your settings and displayed in the task list.

## Execute Task: Statistics

( ☰ )

▶ If you haven't already done so, go to Task Management.
▷ The task selection is displayed.
▶ Touch the desired task.

or

▶ If the desired task is already selected, press **Start**.

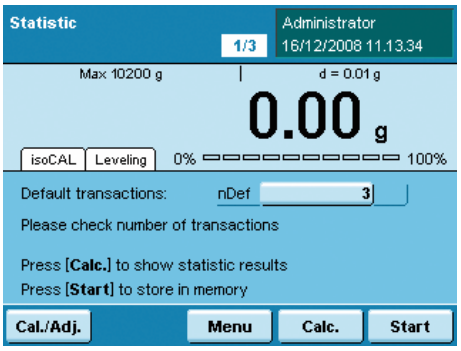


▷ The program switches to operating mode.

▶ If required, enter the number of items that you want to analyze.
▶ Place the first sample on the weighing pan.
▶ To start Statistics, touch **Start**.
▷ The first weight value is displayed.

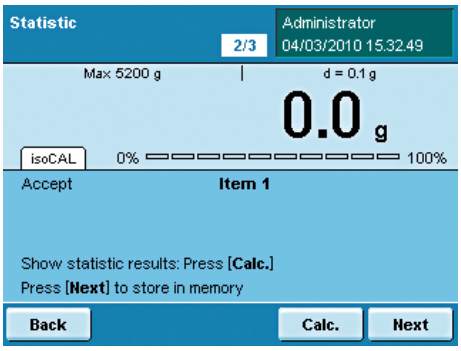


- Place the next sample on the weighing pan and touch **Next**.
- Continue with all other samples in the same way.
- You can remove each last value from the statistics by touching **Corr**.
- During the task, you can have the result displayed at any time by touching **Calc.**

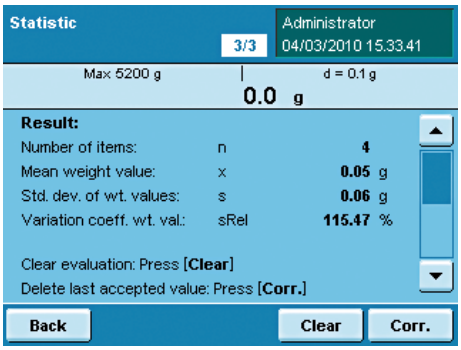


- Once all intended samples have been weighed, the result is displayed.
- To delete the results and begin the next task, touch **Clear**.

**Print example:**

```
---------------------
n                   1
Comp             98.8 g
n                   2
Comp             56.4 g
  :
  :
  :
n                   5
Comp             56.4 g
n                   5
Sum             280.3 g
x               56.06 g
s               24.93 g
sRel            44.46 %
Max              98.8 g
Min              37.2 g
Diff             61.6 g
---------------------
```

# Calculation

Purpose: This application is used to calculate the weight value using an algebraic formula that you define yourself. You can define a fixed formula or one that you can change while executing the task.

M On balances used as legal measuring instruments, follow the directions in the "Execute Task" section!

Combination options: Second tare, (SQmin function, DKD measurement uncertainty)

Example: You want to determine the area of irregularly cut pieces of paper. The grammage of the respective paper type is known.

## Configure Task: Calculation

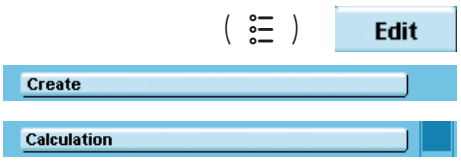


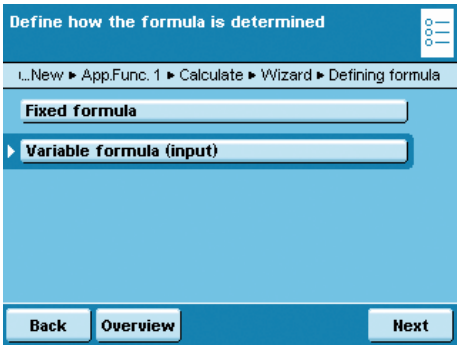


▶ Select whether you want to use a fixed formula or a variable formula.

**Fixed formula**: All calculations are carried out with the formula that you define for this task.
**Variable formula (input)**: You can change the formula before each calculation.

**Example**: The area of irregular paper samples must be determined.
The respective paper grammage in g/cm² is known. The equation for determining the paper area in cm² is:
Paper area = weight value W in g * 10000 / grammage in g/cm².
The formula to be entered for a grammage of 80 g/cm² is:
**Wx10000/80**
To analyze different paper types, the formula must be able to be changed before each calculation (e.g., for paper with 80, 90, 100 g/cm²).
Additional formula examples are at the end of this section. Likewise, you can create several tasks, one for each paper type.

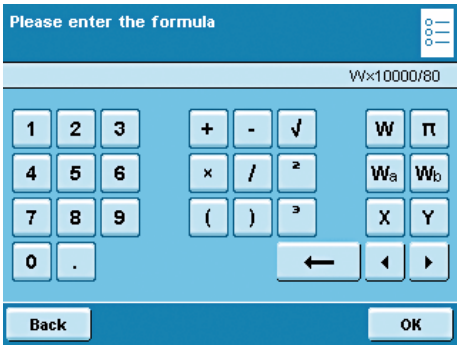


▶ If a fixed formula will be used, enter it now.
▶ If you want to work with a variable formula, enter the formula when you execute the task.

| | | | |
|---|---|---|---|
| W | Dynamic weight value | π | Pi = 3.1415926 |
| Wa | Applied weight value* a | Wb | Applied weight value* b |
| X Y | Fixed constant calc. value | | |

√ Square root**

² 2nd power **

³ 3rd magnitude**

* for calculation

** corresponding to general mathematical characters

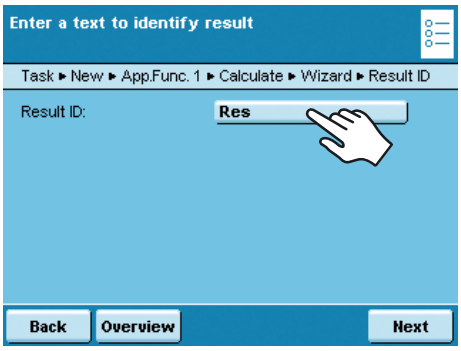


▶ Enter a name for the event print, e.g., “Area” (max. 6 characters).

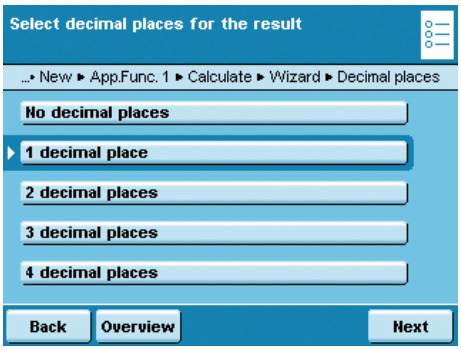


▶ Define how many decimal points should be used for the results:
**No decimal places, *1 ... 7 decimal places**

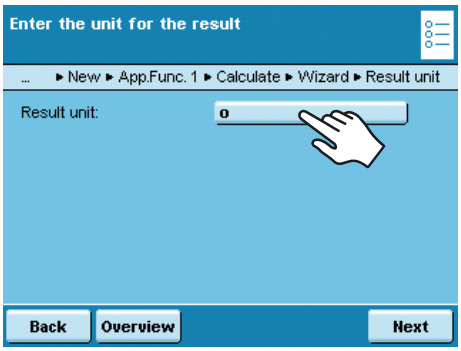


▶ Enter the unit to be used for the results (max. six characters, e.g., $cm^2$)

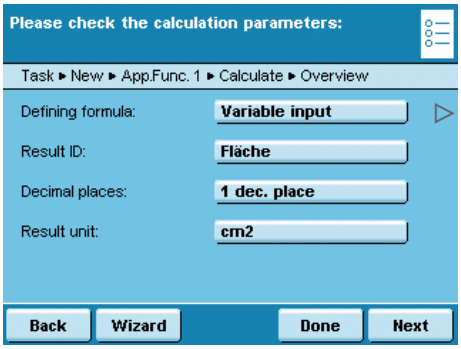


▷ An overview of all settings is displayed.
▶ Check all settings and change as required.

A message asks whether you would like to add another application.

▷ Prompts for configuring weighing and printing appear.
▶ Check all settings and change as required.
▶ Enter a short name and a description for the new task.
▶ To save the new task, touch **Save**.

## Execute Task: Calculation

( ☰ )

▶ If you haven't already done so, go to Application Management.
▷ The task selection is displayed.
▶ Touch the desired task.

or

Start

▶ If the desired task is already selected, touch **Start**.

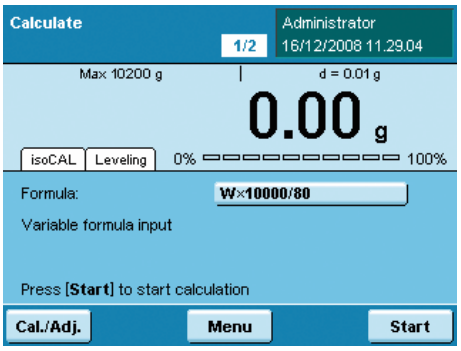


▶ When you want to work with a variable formula, you can now enter or change the formula.
▶ Place the sample on the balance.

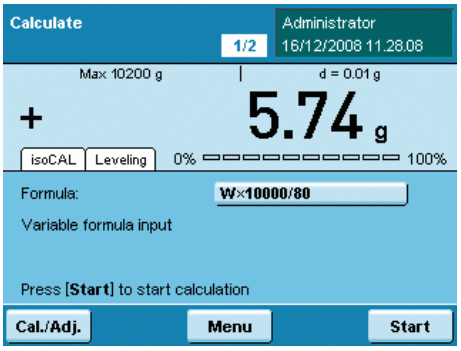


▷ The weight value is displayed.
▶ To start the calculation, touch **Start**.

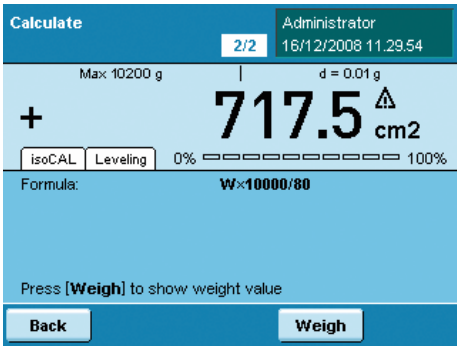


▷ The calculation results are displayed.
▶ To return to the weight value display, touch **Weigh**.

Calc.

▶ If you want to carry out additional weighing and calculations using the same formula, place the sample on the balance and then touch **Calc.**

Back

▶ If you want to carry out additional weighing using a different formula touch **Back**.
▶ You can now change the formula and then proceed as described above.

# Examples of Calculation Formulas

## 1) Diameter Determination

Purpose
This application is used to determine the diameter of round wires and metal threads (cylindrical solid bodies). For example, for use in determining the diameter of filaments. The density and length of the sample is required for calculating the diameter.

### Formulas and abbreviations

Definition: d = 2 × √ ( W / (π × l × Rho / 1000) )
with: d = diameter of sample in mm
√ = square root
W = weight value in grams
π = PI = 3.145..
l = length of sample in mm, e.g., 100 mm
Rho = density of sample in g/cm³, e.g., 8.3 g/cm³

### Preparation (only required if you need to make changes)

Access the “Change” item from the Task menu. The available tasks can be loaded from the SD card (in this case, the “TASK-DIAMETER-DETERM” file).

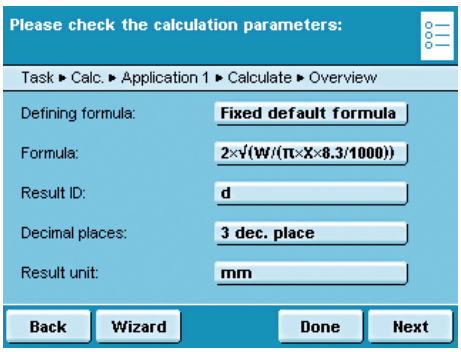


The “Calculation” application is set with the following parameters:
- Formula specifications: fixed
- Formula: 2 × √ ( W / π × X × 8.3 / 1000) )
- Result identifier: d
- Number of decimal places: 3 digits
- Result unit: mm

## Execute Task: Calculation "Diameter Determination"

▶ If you haven't already done so, go to Task Management.
▷ The task selection is displayed.

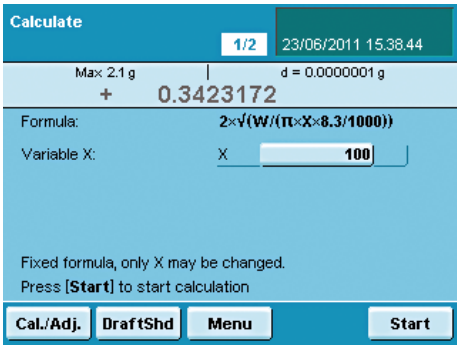


▶ Touch the "Diameter determination" task from the Task menu.
▷ The formula for diameter determination and the density of the sample (8.3 g/cm³) are preset..
▶ The length of the sample, e.g., 100 mm can be entered using the X variable.

▶ Touch **Start** to begin the calculation.

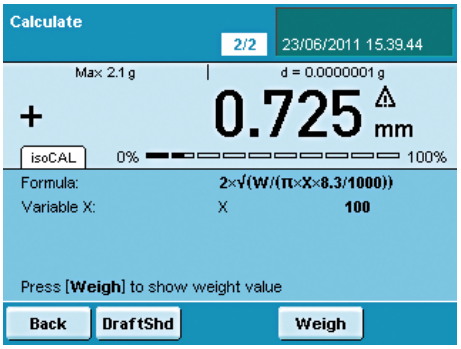


▶ The diameter is displayed as the calculation result.
▶ To return to the weight value display, touch **Weigh**.
▶ You can view both values, the weight and the diameter.

▶ If you want to carry out additional weighing and calculations using the same formula, place the sample on the balance and then touch **Calc.**
▶ If you want to carry out additional weighing using a different formula, touch **Back**.
▶ You can now change the formula and then proceed as described above.

**Print via the ( 🖹 ) key:**

```
N     + 0.365387 g
X          100
d     +    0.749 mm
```

## 2) Diameter Determination for Cylindrical Bodies

Definition: Diameter = 2 × V (W / (π × l × Rho))
with: V = square root
W = weight value in g
π = 3.145
l = length of sample in cm
Rho = density of sample in g/cm³ (e.g., 8.30000 g/cm³)

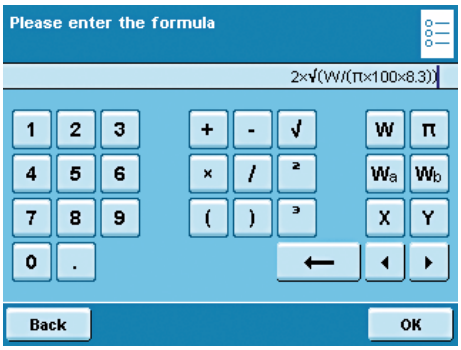


**Formula**
Input:: 2 × V (W/(π × 100 × 8.3/1.000))
Header: d
Unit: mm

## 3) Air Buoyancy Correction

Purpose
This application can correct weighing errors that can arise due to air buoyancy when working with weights of different densities.
The air density value is required when calculating the air buoyancy correction.
Formulas and abbreviations
1. Definition: m = W * K
with: m = mass of the sample, unit symbol "**g!**"
W = weight value in grams
K = correction factor

2. Definition: K = 1 – (RhoL / RhoST) / 1 – (RhoL / RhoG)
with: RhoL = air density in g/cm³, e.g., 0.0012 g/cm³ (standard air density)
RhoST = density of steel, e.g., 8.0000 g/cm³
RhoG = density of sample, e.g., 2.4000 g/cm³

### Preparation

Access an existing task, for example, via the "Change" item from the Task menu. The available tasks can be loaded from the SD card (in this case, the "TASK-AIR-BUOYANCY_CORR" file).

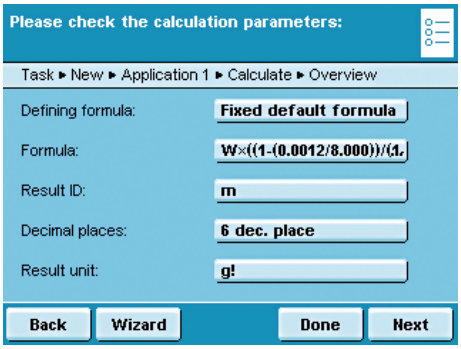


The "Calculation" application is set with the following parameters:
- Formula specifications: fixed
- Formula: W × ( ( 1 - ( 0.0012 / 8.000 ) ) / ( 1 - ( 0.0012 / X ) ) )
- Result identifier: m
- Number of decimal places: 6 decimal places
- Result unit: g!

## Execute a Task: Calculation "Air Buoyancy Correction"

▶ If you haven't already done so, go to Task Management.
▷ The task selection is displayed.

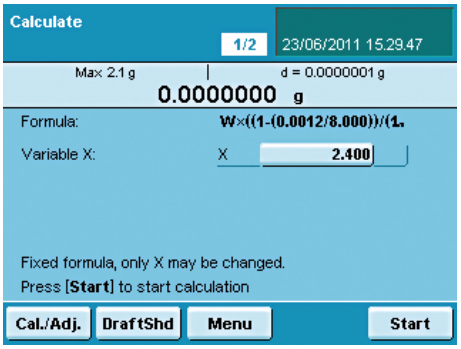


▶ Touch the "Air buoyancy correction" task from the Task menu.
▷ The formula for the air buoyancy correction is already defined.
▶ Enter the density of the sample via "Variable X," in this example 2.400 g/cm³.

▶ Touch **Start** to begin the calculation.

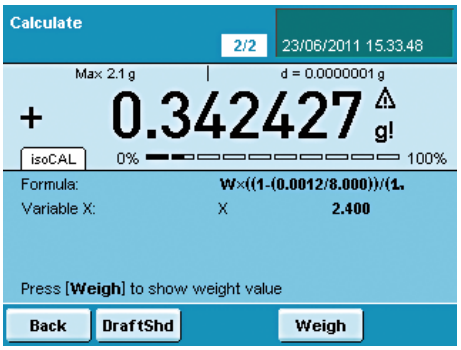


▶ The mass is displayed as the calculation result.
▶ To return to the weight value display, touch **Weigh**.
▶ You can view both values, the weight and the mass.

▶ If you want to carry out additional weighing and calculations using the same formula, place the sample on the balance and then touch **Calc**.
▶ If you want to carry out additional weighing using a different formula, touch **Back**.
▶ You can now change the formula and then proceed as described above.

**Print via the ( 🖹 ) key:**

```
N    + 3.183629 g
X        2.400
m    + 3.184744 g!
```

## Execute Task: Calculation

( ☰ )

▶ If you haven't already done so, go to Application Management.
▷ The task selection is displayed.
▶ Touch the desired task.

or

Start

▶ If the desired task is already selected, touch **Start**.

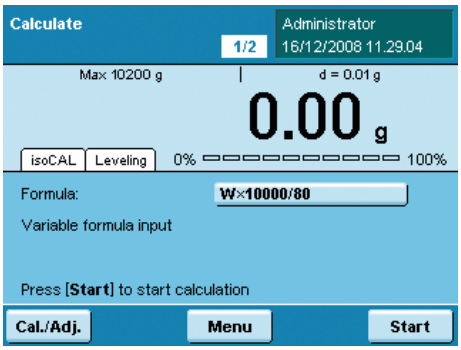


▶ When you want to work with a variable formula, you can now enter or change the formula.
▶ Place the sample on the balance.

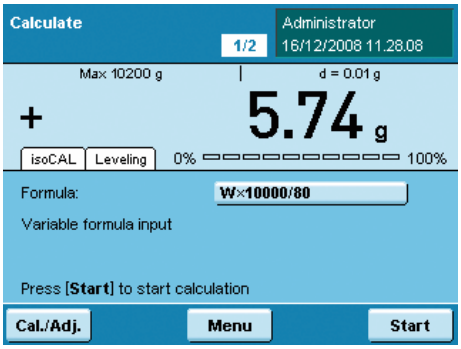


▷ The weight value is displayed.
▶ To start the calculation, touch **Start**.

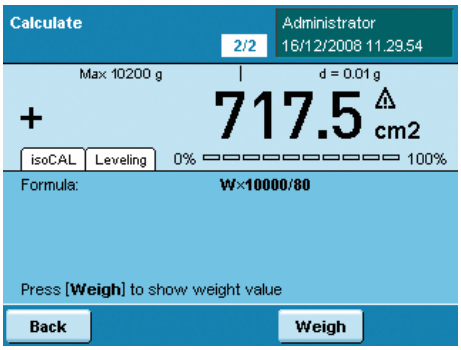


▷ The calculation results are displayed.
▶ To return to the weight value display, touch **Weigh**.

Calc.

▶ If you want to carry out additional weighing and calculations using the same formula, place the sample on the balance and then touch **Calc.**

Back

▶ If you want to carry out additional weighing using a different formula touch **Back**.
▶ You can now change the formula and then proceed as described above.

# Averaging

Purpose: This application is used for moving samples (e.g., live animals) and for weighing in unstable environments. A measurement cycle is automatically carried out with a defined number of measurements for each object to be weighed. The individual measurements are averaged and this average is displayed as the result.

M On balances used in legal metrology, follow the directions in the “Execute Task” section!

Options: You can start the measurement manually or it can start automatically as soon as the min. weight is reached. Depending on how strong the unsteadiness of the sample is, you can vary the sensitivity at the start of the measurement. The number of measurements from which the average is taken can also be defined.

Combination options: Checkweighing, timer controlled functions, totalizing, statistics, formulation, SQmin function, DKD measurement uncertainty, second tare, individual identifiers.

( ☰ ) Edit

## Configure Task: Averaging

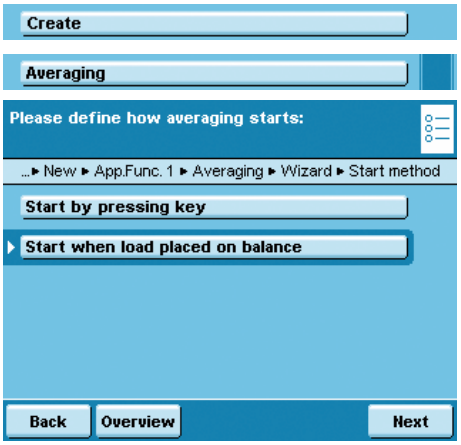


▶ Select how the application should start.
**Start by pressing key:** This starts the application manually.
***Start when load placed on balance:** The application starts automatically as soon as a pre-defined min. load is exceeded.

▶ Define the min. load for the automatic start of the averaging and/or for the release of the result display for the manual start.
**none, 10, 20, 50, *100, ...1000 digits**

The number of **digits** depends on the balance resolution (see Display).
Example: For a balance with a resolution of d = 0.1 (100 mg), 100 digits means a min. load of 100 × 0.1 = 10 g. With this setting, the automatic start would be triggered as soon as a min. of 10 g was placed on the balance.

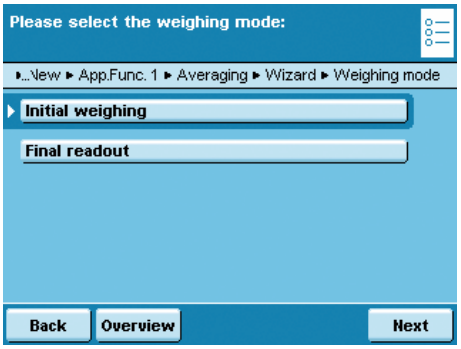


Only for automatic start:
▶ Determine the weighing mode: ***Initial weighing** or **Final readout.**

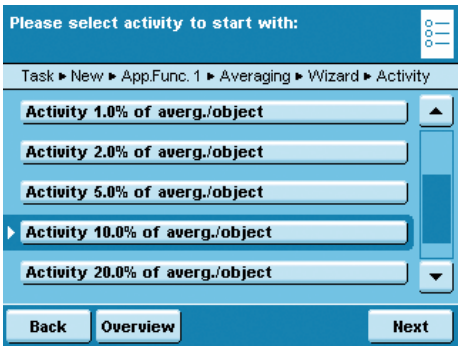


▶ Enter the sensitivity for the start of the measurement:
**0.1%, 0.2%, 0.5% ... *10% ... 50% of averg./object**
This entry estimates the strength of unrest that is caused by the activity at the beginning when loading the balance (e.g., animal movement). You can use the rough estimation or a more detailed estimation using percentages.
The weight value changes with each movement of the weighing pan. As soon as three consecutive measurement values are within the selected unrest range, the interval measurement begins.

**Example**: You are weighing animals with an average weight of approx. 300 g. With the "5% of averg./object" setting, the measurement starts when the movements are within a range of 15 g, i.e., ± 7.5 g. With the "50% of averg./object" setting, the interval measurement would start when the weight value was within a range of 150 g, i.e., ± 75 g.

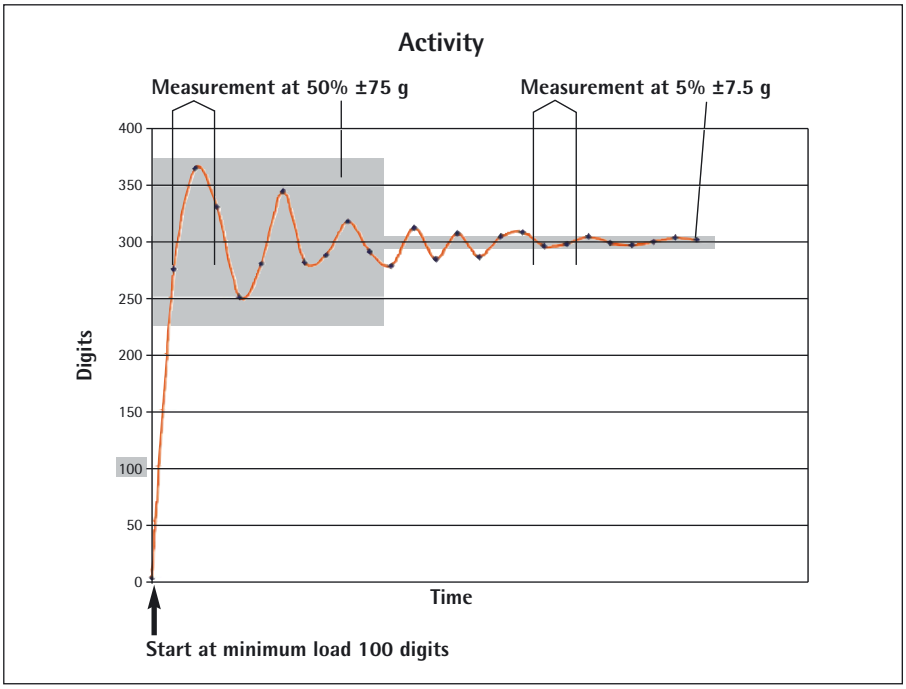


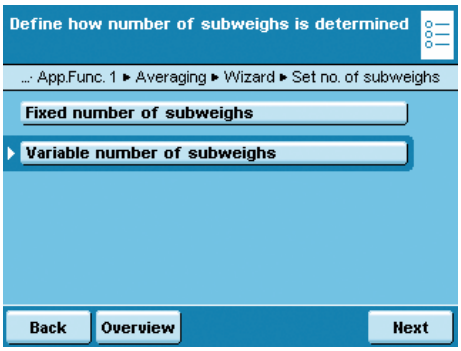


▶ Define the number of measurements to be used for the average value.
**Fixed number of subweighs**: You must now enter a fixed number.
***Variable number of subweighs**: You will define the number when you execute the task.

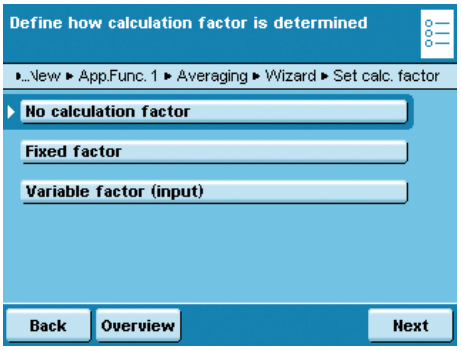


▶ Define whether or not the weighing results should be calculated with an additional factor and how this factor should be applied.

**No calculation factor**

**Fixed factor:** You must now enter this factor.

**Variable factor (input)**: You must enter this factor when you execute the task.

**Example**: Each animal should receive a food supplement of 50 mg per kg of body weight. For this, the factor 0.05 can be entered (weight value in g/1000 g × 0.05 g). During the measurement, both the weight value (animal weight, e.g., 285 g) as well as the calculated value (amount of supplement, e.g., 14.25 mg) can be displayed.

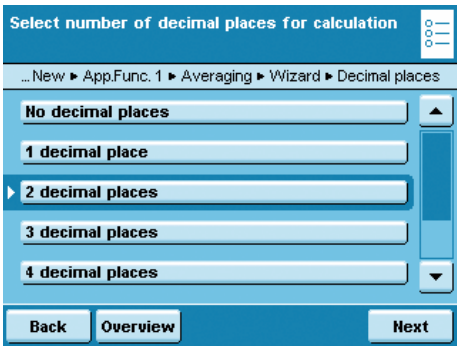


If you selected the calculation:

▶ Define the number of decimal places to be used for the calculation.

**No decimal places, 1, *2, ... 6 decimal places**

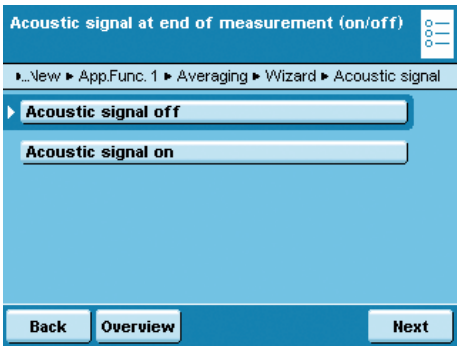


▶ Define whether or not the end of the measurement (and if necessary the calculation) should have an acoustical signal.
***Acoustic signal off** or **Acoustic signal on**

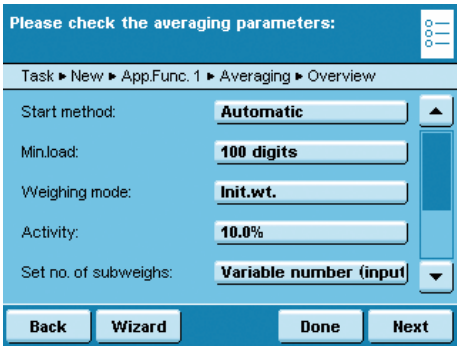


▷ An overview of all settings is displayed.
▶ Check all settings and change as required.

▷ A message asks whether you would like to add another application.
▶ If required, select additional applications to be combined.

▷ Prompts for configuring weighing and printing appear.
▶ Check all settings and change as required.
▶ Enter a short name and a description for the new task.
▶ To save the new task, touch **Save**.

## Execute Task: Averaging with Manual Start

( ☰ )

▶ If you haven't already done so, go to Application Management.
▷ The task selection is displayed.
▶ Touch the desired task.

or

Start

▶ If the desired task is already selected, press **Start**.

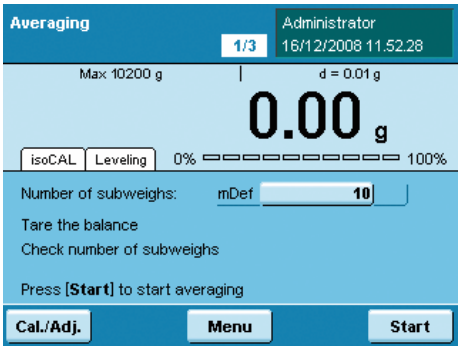


▶ When you are using a variable number of measurements, enter the desired number.

▶ When you are weighing live animals, place the container (cage) on the weighing pan and tare the balance.
▶ Place the animal in the container.

Start

▶ To begin weighing, touch **Start**.

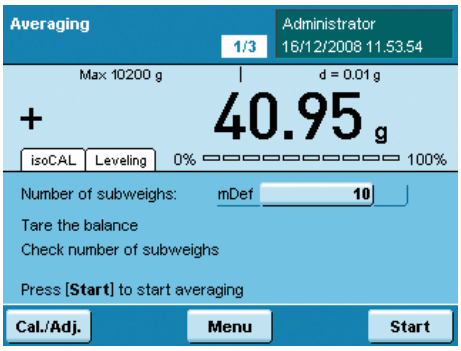


▷ The defined number of measurements is carried out and the average is displayed.

Start

▶ To begin the measurement, touch **Start**.

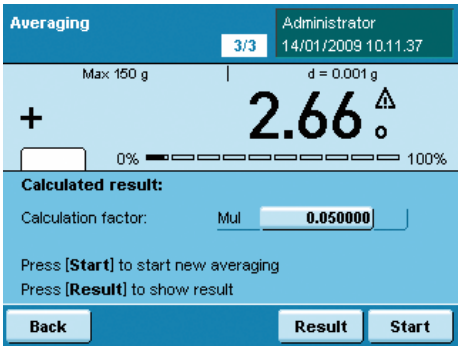


▷ The results calculated with the entered factor are displayed.

Result

▶ To display the average weight value, touch **Result**.

Calc.

▶ To return to the display of the calculated value, touch **Calc**.

## Execute Task: Averaging with Automatic Start

( ☰ )

▶ If you haven't already done so, go to Application Management.
▷ The task selection is displayed.
▶ Touch the desired task.

or

Start

▶ If the desired task is already selected, press **Start**.

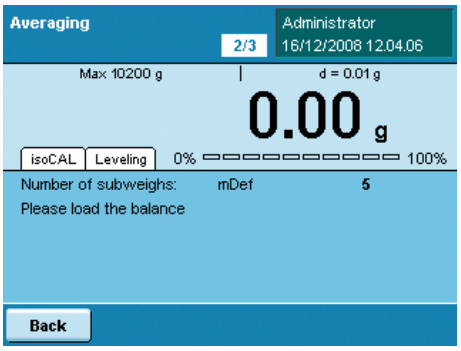


▶ When you are using a variable number of measurements, enter the desired number.

▶ When you are weighing live animals, place the container (cage) on the weighing pan and tare the balance.

Start

▶ Press **Start** to begin the task.

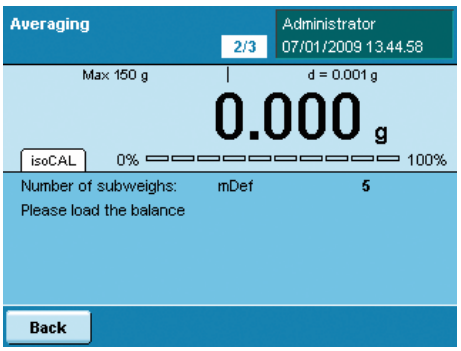


▶ Place the animal in the container.

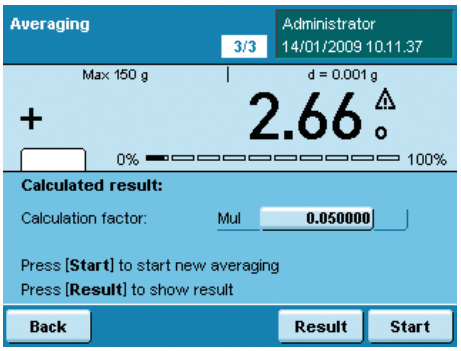


▷ The measurement starts automatically, the defined number of measurements and averaging is carried out.
▷ The calculated results are displayed.

Result

▶ To display the average weight value, touch **Result**.

Calc.

▶ To return to the display of the calculated value, touch **Calc**.

# Formulation

Purpose: This application is used to weigh while adding several components consecutively. The balance is tared automatically after each component. The weight values of all individual components as well as the total weight results are recorded and can be logged.
You can save a maximum of 65535 components.

Combination options: Mass unit conversion, second tare memory and individual identifiers, (SQmin function, DKD measurement uncertainty)

Options: The program allows 7 different formulations.

**1) Fixed formulation in grams**: Number of components and the weight portion of each component (in g) are fixed.

**2) Fixed formulation in % with total = 100%, total weight is entered**:
Number of components and the percentage of each component are fixed.
The total weight is entered when the task is started. If the percentages do not add up to 100, the individual values are converted to 100%.
**Example**: Number of components nDef =3; component 1 = 25%, component 2 = 30%, component 3 = 10%; components, total = 65% is set equal to 100%.
Component 1: 25%/65% * 100 = 38.46%; Component 2: 30%/65% * 100 = 46.15%; Component 3: 10%/65% * 100 = 15.38%

**3) Fixed formulation in % with total = 100%, total weight is calculated according to the first component**: Number of components and the percentage of each component are fixed. If the percentages do not add up to 100, the individual values are converted to 100% (cf. Formulation 2). After weighing the first component, the total weight (100%) is calculated.

**4) Fixed formulation in % with total <> 100%, total weight is entered**:
Number of components and the percentage of each component are fixed.
If the total of percentages does not equal 100, the individual values are **not** converted. The total weight is entered, for each component, the user-defined weight and the percentage are displayed before weighing.

**5) Fixed formulation in % with total = 100%, total weight is calculated according to the first component**: Number of components and the percentage of each component are fixed. If the percentages do not add up to 100, the individual values are converted to 100%. For the first component, the user-defined weight is displayed before weighing in percent. After weighing the first component, the total weight (100%) is calculated. Before weighing any other component, the respective user-defined weight is displayed in g and %.

**6) Variable formulation in grams, component count are in a fixed order**:
Before weighing the first component, you can change the number of components; before weighing each component you can change its name.

**7) Variable formulation in grams, component count are in a fixed order**:
Before weighing the first component, you can zero the number of components; before weighing each component you can change its name.

**For all formulations, the following applies:**

- The individual components can be stored manually or automatically (first reproducible value).
- If automatic storage of values was selected, the minimum load is determined when the task is created.
- After weighing the first component, the **Calc.** button is displayed. That way, you can change the display to show the intermediate result.
- Once the intermediate result is displayed, you can delete the value of the last weighed component by pressing the button **Corr.** and it will be removed from the calculation. This allows you to delete all components step-by-step in reverse order. Deleting is **not reversible**!
- Use the **Back** button to toggle the display and continue the task.
- After the defined number of components has been weighed, the evaluation is displayed. Here, too, you can still delete the components (beginning with the last component) and weigh them again.

**Note**: For the seventh formulation, there is no automatic evaluation because the defined number of components is zero. You have to operate the evaluation manually by touching **Calc.**

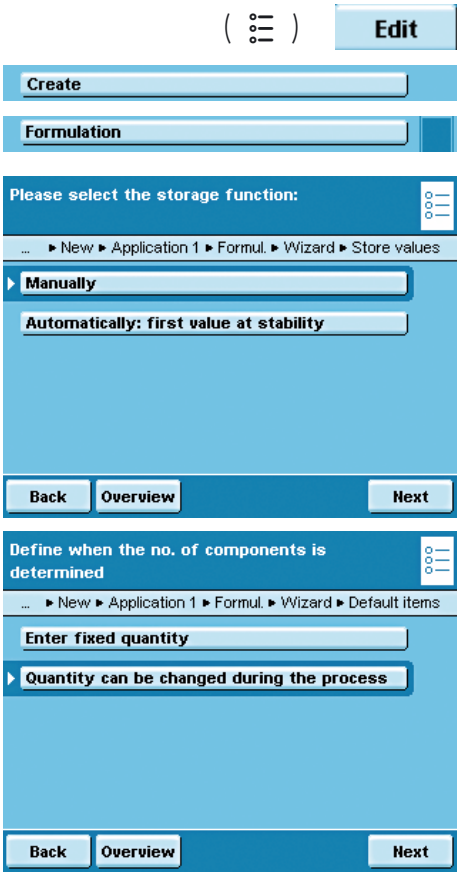


## Configure Task: Formulation

* = factory setting

▶ Define how the weight values will be applied.

***Manually**: The weight value is applied as soon as the corresponding button is touched.
**Automatically: first value at stability**: The weight value is applied automatically as soon as the balance has stabilized. You must now select the minimum load to be applied (**10, 20, ... *100 ... 1000 digits**).

▶ Set when the number of components will be defined.

**Enter fixed quantity**: The number of components is defined beforehand.
***Quantity can be changed during the process**: Enter the number of components only when you execute the task (Formulations 6 and 7).

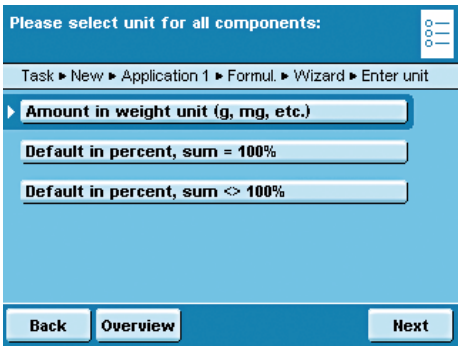


▶ Once you fix the components, define the unit:
***Amount in weight unit** (Formulation 1)
**Default in percent, sum = 100%** (Formulations 2 and 3)
**Default in percent, sum <> 100%** (Formulations 4 and 5)

▶ Touch **Next**.
▶ Enter the number of components.

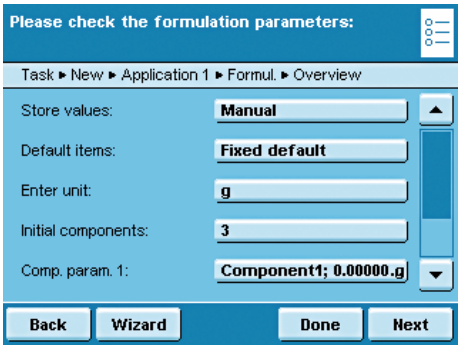


▷ An overview of all settings is displayed (in this case, Formulation 2).
▶ Check all settings and change as required.

▷ A message asks whether you would like to add another application.
▶ If required, select additional applications to be combined.

▷ Prompts for configuring weighing and printing appear.
▶ Check all settings and change as required.
▶ Enter a short name and a description for the new task.
▶ To save the new task, touch **Save**.

## Execute Task: Formulation

( ☰ )

▶ If you haven't already done so, go to Application Management.
▷ The task selection is displayed.
▶ Touch the desired task.

or

▶ If the desired task is already selected, press **Start**.

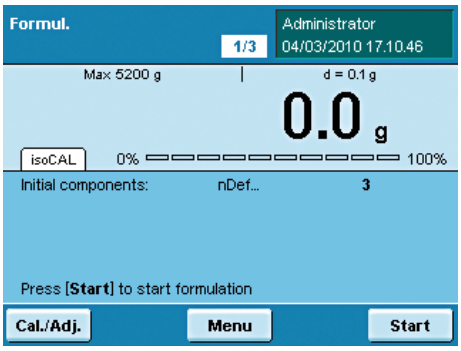


▶ If required, enter the number of components that you want to weigh while adding them.
▶ To start the formulation, touch **Start**.

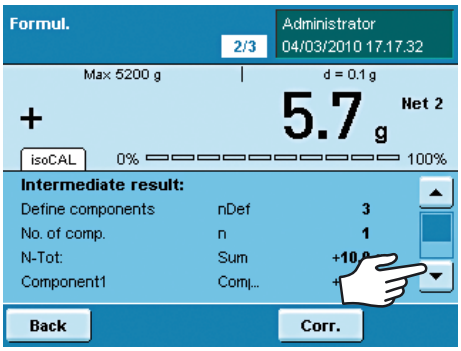


▶ If required, enter the name of components.

Please note that you will be able to scroll through the lines as soon as a scroll bar appears at the right of the display.

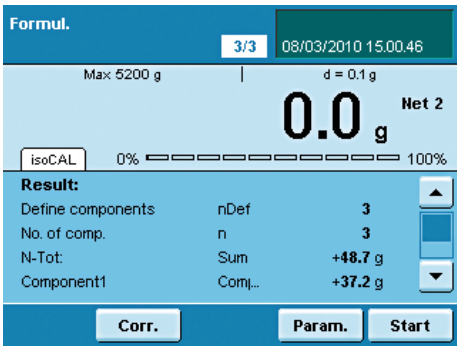


▷ The evaluation is displayed as soon as all components of the formulation have been added and weighed.

You can also see the complete list here when you touch the scroll bar.

▶ To delete the last component, touch **Corr**.

▶ To go to the parameter page, touch **Param**.

▶ To restart the formulation (with changed parameters), touch **Start**.

**Print example:**

```
---------------------
IdCm1      Component1
Comp1 +       39.2 g
IdCm2      Component2
Comp2 +       23.3 g
   :
   :
   :
IdCm5      Component5
Comp5 +       32.4 g
nDef             5
Sum   +      117.6 g
---------------------
```

# Weighing in Percent

Purpose: This application is used to determine the percentage share or the percentage difference of the sample related to a reference weight.
Options: You can enter a fixed reference weight or a reference percentage.
Combination options: Checkweighing, timer controlled functions, totalizing, statistics, formulation, second tare, individual identifiers, (SQmin function, DKD measurement uncertainty)

## Configure Task: Weighing in Percent

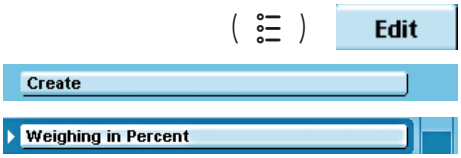


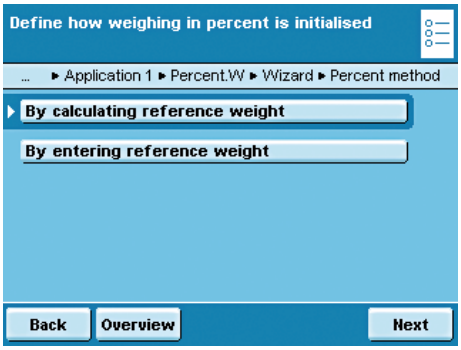


▶ Define how the weighing in percent will be initialized.
**By calculating reference weight**: The reference weight is determined by weighing a reference object.
**By entering reference weight**: The reference weight is entered as a numerical value.

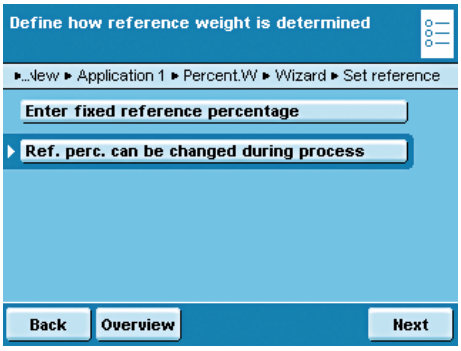


If the reference weight should be **calculated**.
▶ Define whether the reference percentage should be fixed or variable.
**Enter fixed reference percentage:** You must now enter the reference percentage.
***Ref. perc. can be changed during process**: You can enter this when carrying out the task.

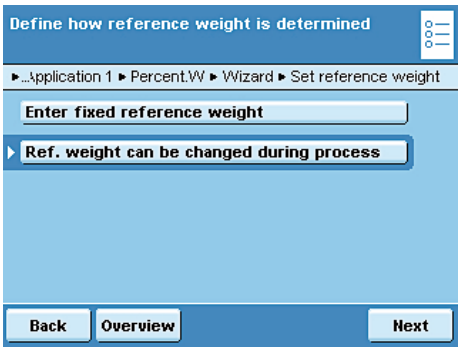


If the reference weight should be **fixed**:
**Enter fixed reference weight**: You must enter this now.
***Reference weight can be changed during process**: You can enter this when carrying out the task.

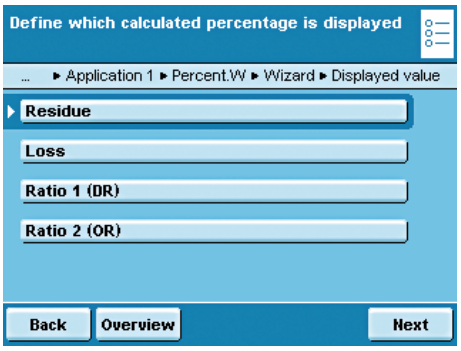


▶ Define which percent calculation should be used.
**Example**: Weight value = 10 g, reference weight = 50 g

***Residue**: The result is the percentage share of the weight value of the reference weight (residue: weight value/reference weight* 100%; in the example: 20%)
**Loss**: The result is the percentage loss between the weight value and the reference weight (loss: weight value - reference weight / reference weight * 100%; in the example: –80%)
**Ratio 1 (DR):** The result is the percentage ratio of the difference to the weight value (ratio 1: reference weight - weight value / weight value * 100%; in the example: 400%)
**Ratio 2 (OR):** The result is the percentage ratio of the reference weight to the weight value (ratio 2: reference weight / weight value * 100%; in the example: 500%)

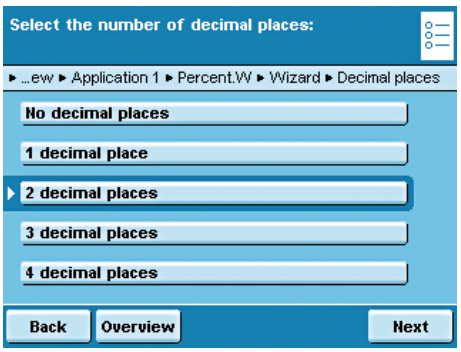


▶ Define the number of decimal places to be used for the display of the percentage.
**No decimal places ... 1, *2 , 3, 4**

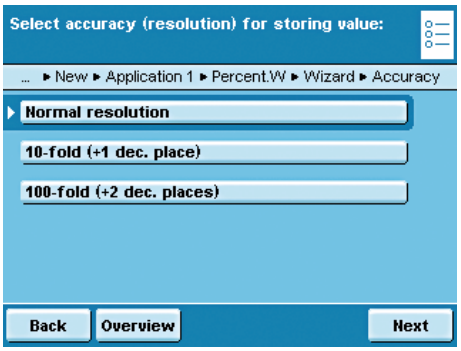


▶ Define the accuracy to be used to apply the weight value for the reference weight.
***Normal resolution**
**10-fold (+1 dec. place)**
**100-fold (+2 dec. places)**

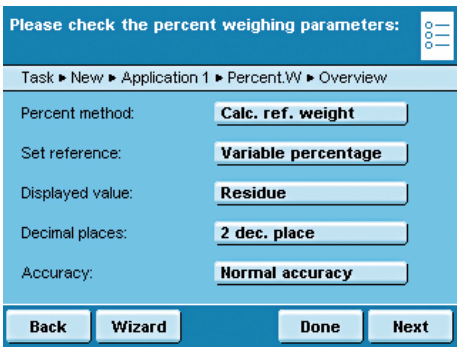


▷ An overview of all settings is displayed.
▶ Check all settings and change as required.

▷ A message asks whether you would like to add another application.
▶ If required, select additional applications to be combined.

▷ Prompts for configuring weighing and printing appear.
▶ Check all settings and change as required.
▶ Enter a short name and a description for the new task.
▶ To save the new task, touch **Save**.

## Execute Task: Weighing in Percent

( ☰ )

▶ If you haven't already done so, go to Application Management.
▷ The task selection is displayed.
▶ Touch the desired task.

or

Start

▶ If the desired task is already selected, touch **Start**.

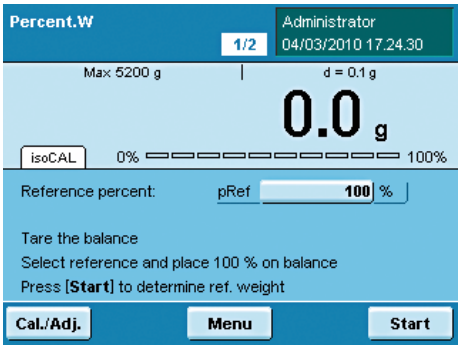


▶ If required, enter the reference percentage (e.g., 100%) or the reference weight.
▶ Place the sample on the weighing pan.

In the example it is the reference sample.

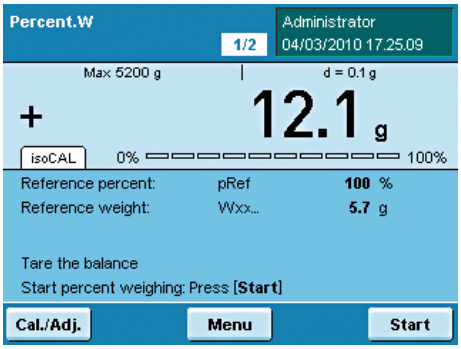


▷ The weight value of the reference is displayed.
▶ To begin the Weighing in percent, touch **Start**.

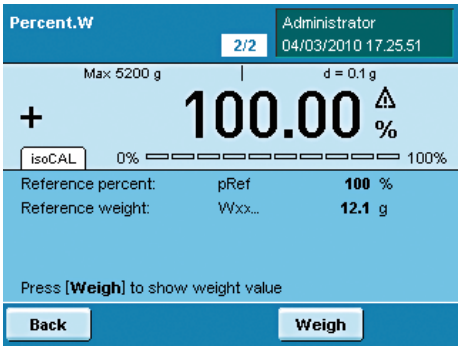


▷ The values for the reference percentage and the reference weight are displayed.
▶ Place the next sample on the weighing pan and touch **Weigh**.

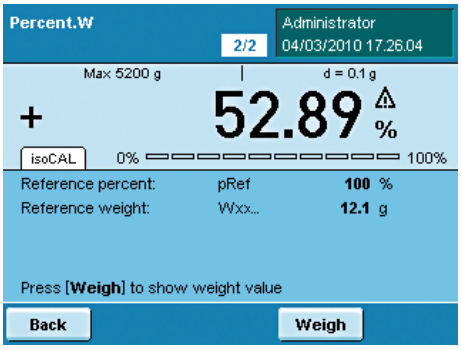


▷ The weight value is displayed.
▶ To toggle between the display of weight and percent, touch **Percent** or **Weigh**.

# Timer-controlled Functions

Purpose: This application is used to trigger individual balance functions automatically at a specific time or after specific time intervals. The time or interval must be within 24 hours (1 day).

Options: You can select the following functions:
- Acoustic signal
- Lock in readout
- Automatical printout of the display value
- Transfer of components for totalizing, formulation or statistics

Example: In order to determine the amount of evaporation of a sample over time, you can place the sample on the weighing pan and print out the weight value at fixed intervals (e.g., every two minutes).

Combination options: Totalizing, statistics, formulation, mass unit conversion, second tare, memory, individual identifiers (SQmin function, DKD measurement uncertainty)

## Configure Task: Timer-controlled Functions

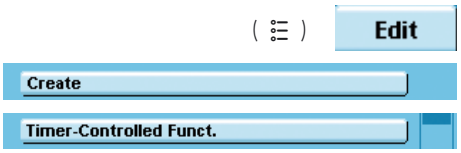


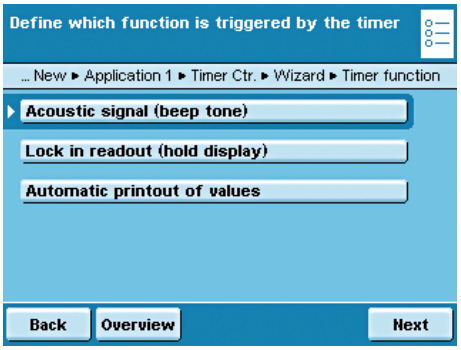


▶ Define which function should be timer controlled.
***Acoustic signal (beep tone)** The balance makes a beeping sound.
**Lock in readout:** The measured weight value remains on the display for the defined time period.
**Automatic printout of values**: The displayed value is printed at the defined time.

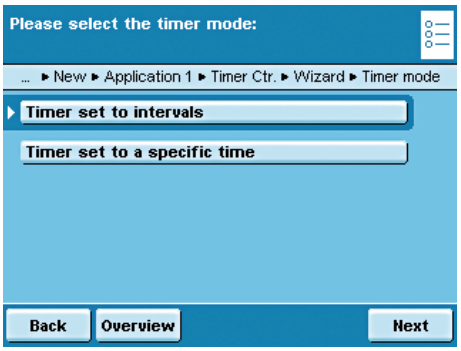


▶ Select the mode.
***Timer set to intervals:** The function is triggered at regular intervals (e.g., every 30 sec.).
**Timer set to a specific time:** The function is triggered at the fixed time (after the start of the application) (e.g., at 08:00:00).

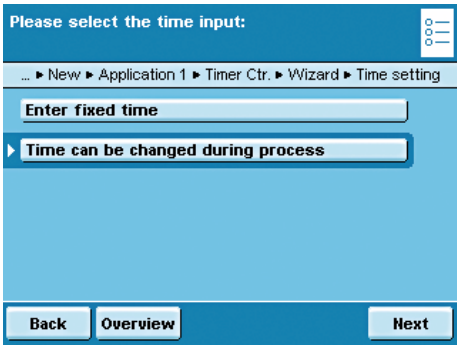


▶ Specify when the time and/or interval should be entered.
**Enter fixed time:** You must enter this time and/or interval now.
***Time can be changed during process**: The time and/or interval is only entered when the task is carried out.

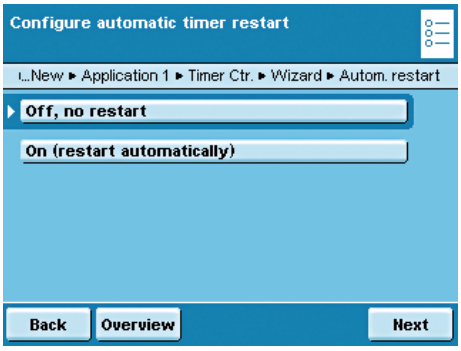


▶ Specify whether or not there should be an automatic restart of the timer-controlled function after it has been triggered.

***Off, no restart**

**On (restart automatically):** The timer is restarted as soon as the timer-controlled function has been carried out.

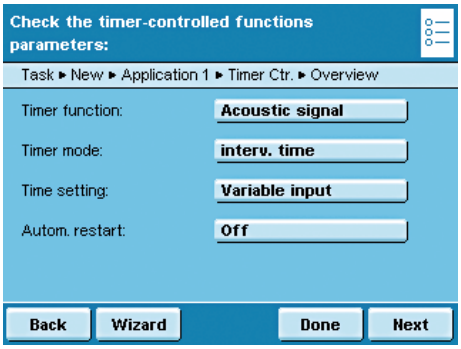


▷ An overview of all settings is displayed.
▶ Check all settings and change as required.

▷ A message asks whether you would like to add another application.
▶ If required, select additional applications to be combined.

▷ Now you will be prompted to configure the weighing and printing functions.
▶ Check all settings and change as required.
▶ Enter a short name and a description for the new task.
▶ To save the new task, touch **Save**.

## Execute Task: Timer-controlled Functions

( ☰ )

▶ If you haven't already done so, go to Application Management.
▷ The task selection is displayed.
▶ Touch the desired task.

or

Start

▶ If the desired task is already selected, press **Start**.

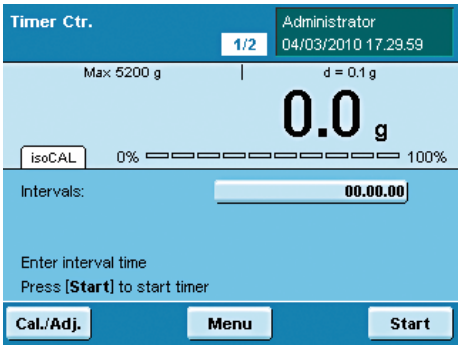


▶ If required, enter the time or interval.
(Enter hh:mm:ss, e.g., 00:00:30 for the 30-second interval)

▶ Follow the instructions on the display.

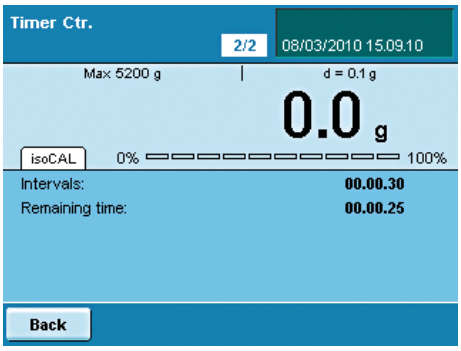

# Totalizing

Purpose: Adding up weight values and calculating values. The weight values of all individual components are recorded and can be logged.

Options: You can save a maximum of 65535 components.

User rights: All settings for the “Totalizing” application are saved under the active user profile. Each user can make their own settings for this application. For this reason, make sure that the desired user profile is selected before you start.

Results: When a user creates a local totalizing task, the results are only saved locally for that user. The results of global tasks, however, are available to all users and the administrator.

Combination options: Calculation, averaging, weighing in percent, parts counting, checkweighing, mass unit conversion, second tare memory, individual identifiers, (SQmin function, DKD measurement uncertainty)

## Configure Task: Totalizing

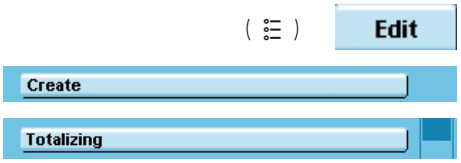


(* = factory setting)

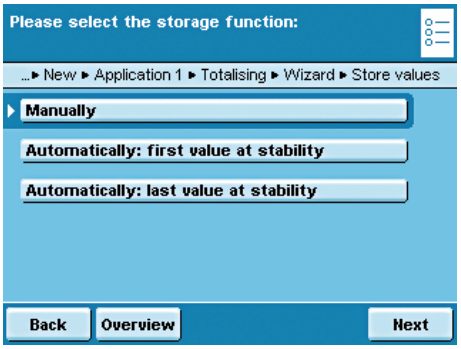


▶ Define how the weight value will be applied.

***Manually:** The weight value is applied as soon as the corresponding button is touched.

**Automatically: first value at stability:** The weight value is applied automatically as soon as the balance has stabilized after filling and the value exceeds the minimum load.

**Automatically: last value at stability:** The last weight value with stability is applied automatically, as soon as the balance is unloaded and the value falls short of the minimum load. If stability was reached repeatedly between measurements, the last stable weight value will be stored.

You must now select the minimum load to be applied:

**(none, 10, 20, ...*100 .. 1000 digits).**

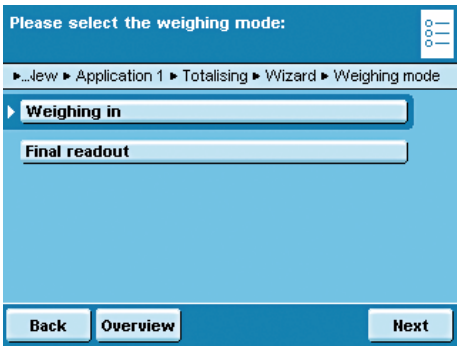


**Weighing Mode with Automatic Storage:**

▶ Select the weighing mode to be used for storing the weight values.

**Weighing in**: Initial weighing of samples in a container.

**Final readout**: Final weighing of samples in a container.

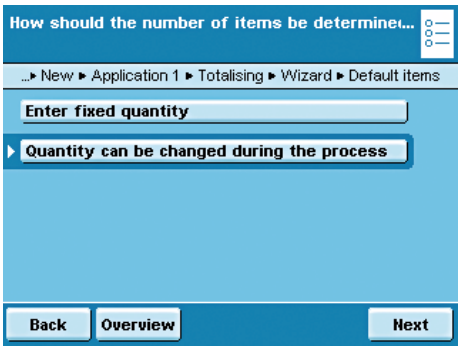


▶ Define when the number of measurements (items) will be defined.
**Enter fixed quantity:** The quantity of items is defined beforehand.
**Quantity can be changed during the process:** Enter the quantity of items when you execute the task.

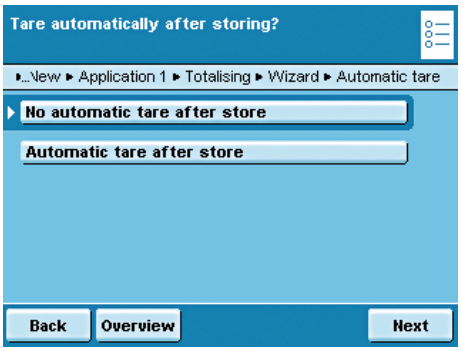


▶ Define whether or not automatic taring should take place after storing the value.

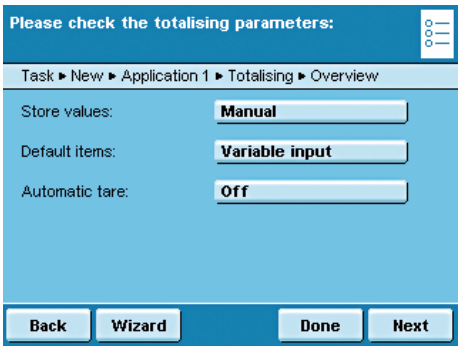


▷ An overview of all settings is displayed.
▶ Check all settings and change as required.

▷ A message asks whether you would like to add another application.
▶ If required, select additional applications to be combined.

▷ Now you will be prompted to configure the weighing and printing functions.
▶ Check all settings and change as required.
▶ Enter a short name and a description for the new task.
▶ To save the new task, touch **Save**.

## Execute Task: Totalizing

( ☰ )

▶ If you haven't already done so, go to Task Management.
▷ The task selection is displayed.
▶ Touch the desired task

or

▶ If the desired task is already selected, press **Start**.

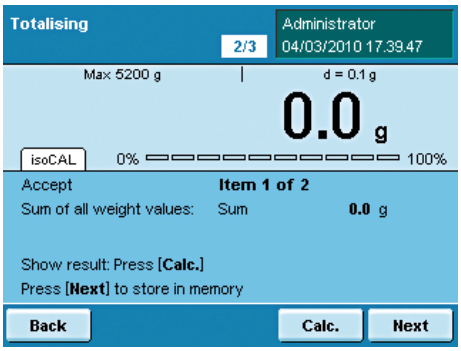


▶ If required, enter the number of items that you want to add up.
▶ Place the first sample on the weighing pan.
▶ To start Totalizing, touch **Start**.

▶ During the task, you can show the results of previous measurements at any time by touching **Calc.**

# DKD Measurement Uncertainty

Purpose: This application is used to ensure that the measurement uncertainty is displayed dynamically so that it conforms to the data documented on the DKD calibration certificate.

Requirements: The function can only be used when the balance has been prepared for this beforehand by a service technician. The service technician determines the measurement uncertainty of the balance via a DKD calibration onsite. The technician records on the DKD calibration certificate the measurements and the measurement uncertainty for initial weighing. He also saves the calculated data on the balance.

Options: The measurement uncertainty can be displayed as an absolute value (U), a relative value (U*) or as process accuracy (PA).

Combination options: Mass unit conversion, second tare memory, individual identifiers, (SQmin function)

## Configure Task: DKD Measurement Uncertainty

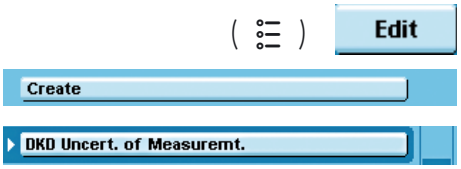


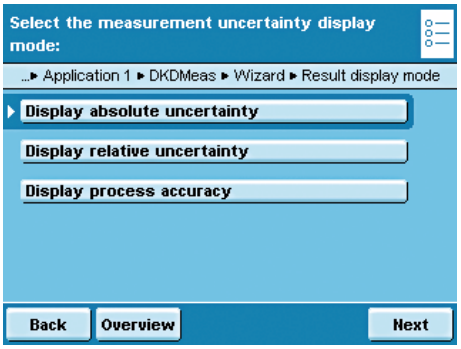


▶ Select the measurement uncertainty display mode in relation to the maximum capacity.

**Absolute uncertainty**: Absolute value (e.g., 12.00 g)
**Relative uncertainty:** Relative value (e.g., 0.000045%)
**Process accuracy:** e.g., 0.00013%

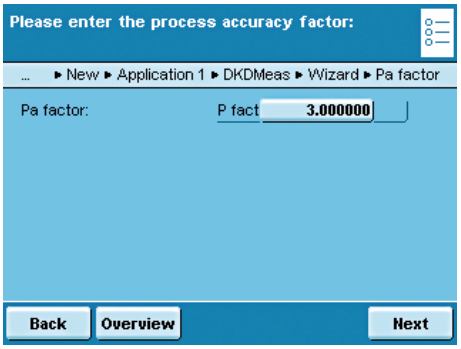


▶ If you have selected **process accuracy**, enter the process accuracy factor now.

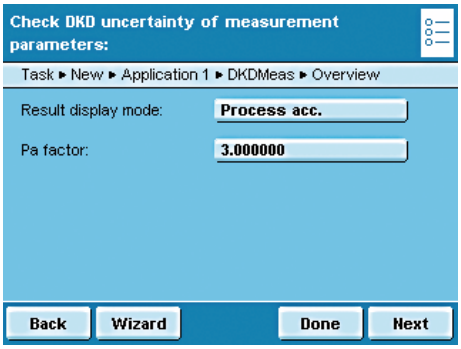


▷ An overview of all settings is displayed.
▶ Check all settings and change as required.

▷ A message asks whether you would like to add another application.
▶ If required, select additional applications to be combined.

▷ Now you will be prompted to configure the weighing and printing functions.
▶ Check all settings and change as required.
▶ Enter a short name and a description for the new task.
▶ To save the new task, touch **Save**.

## Execute Task: DKD Measurement Uncertainty

( ☰ )

▶ If you haven't already done so, go to Application Management.
▷ The task selection is displayed.
▶ Touch the desired task.

or

Start

▶ If the desired task is already selected, press **Start**.

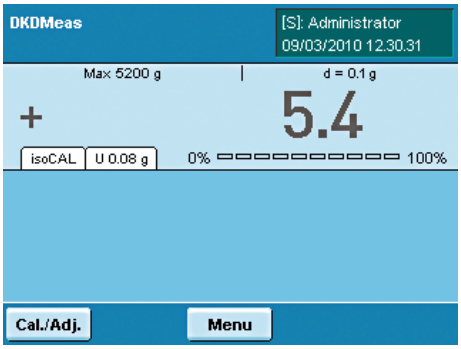


▷ If you have selected **absolute uncertainty**, the uncertainty of the weight value is displayed in a tab (e.g., U 12.01 g). This value is based on the DKD value set by a service technician.

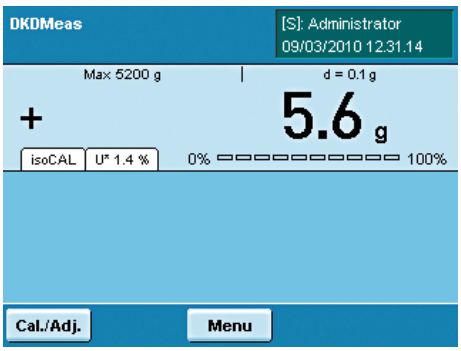


▷ If you have selected **relative uncertainty** the relative uncertainty of the measurement is displayed in a tab as a percentage of the weight value.

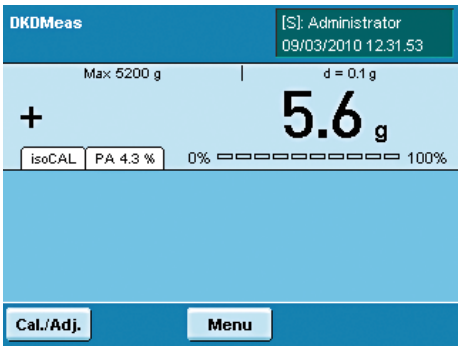


▷ If you have selected **process accuracy**, the process accuracy is displayed in a tab in percent.

# Second Tare Memory (Preset Tare)

Purpose: This application is used to define the second tare value. As soon as a second tare value is used, **Net1** appears on the display for the respective net value.

Options: You can either use a weight value or enter a numerical value as a second tare value.

Combination options: Mass unit conversion, individual identifiers, (SQmin function, DKD measurement uncertainty)

## Configure Task: Second Tare Memory

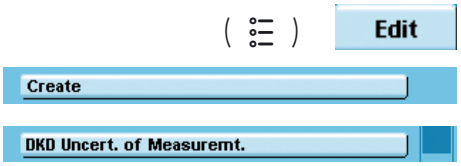


▷ No pre-settings are required for this application.
▷ Now you will be to configure the weighing and printing functions.
▶ Check all settings and change as required.
▶ Enter a short name and a description for the new task.
▶ To save the new task, touch **Save**.

## Execute Task: Second Tare Memory (Preset Tare)

▶ If you haven't already done so, go to Application Management.
▷ The task selection is displayed.
▶ Touch the desired task.

or

▶ If the desired task is already selected, touch **Start**.

▶ You have two options for defining the second tare.

## Setting a Weight Value as Second Tare

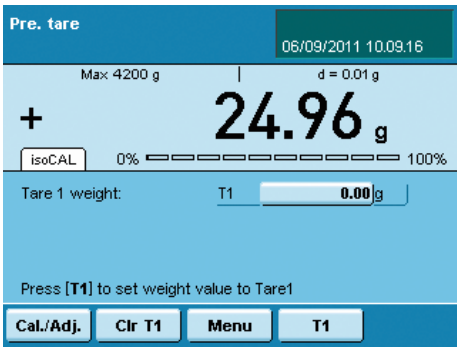


▶ Place the object (container) on the balance whose weight value you want to use as the second tare.

▶ To save the weight value as the second tare, touch **T1.**

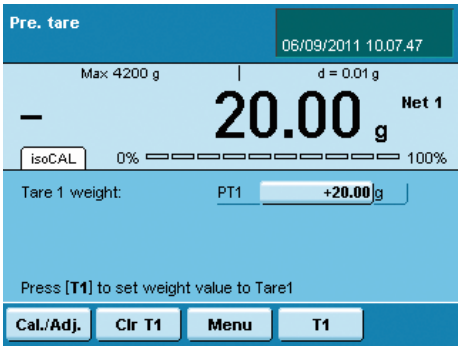


▷ The stored weight value is displayed as the second tare value. **Net 1** is displayed next to the current weight value.

▶ To delete the tare memory, touch **Clr T1.**

## Entering a Numerical Value as a Second Tare

▶ Enter the tare value for **T1** (e.g., 20 g)

▶ Touch **T1** 0.00 g

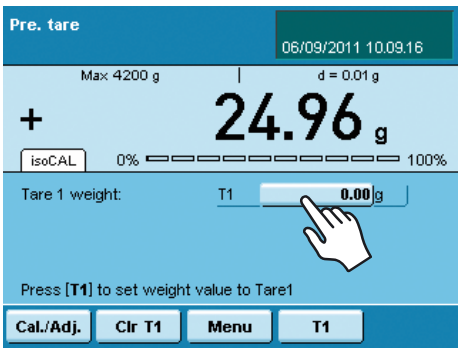


▶ Enter the desired value **PT1** (e.g., 20)

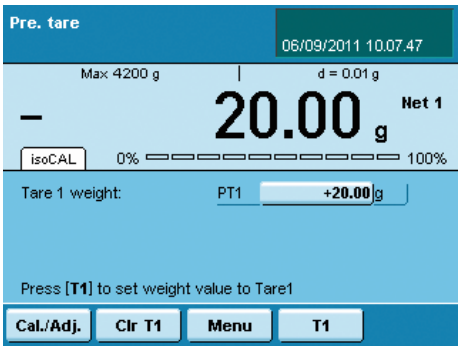


▷ The tare value is displayed.

▶ To delete the tare value, touch **Clr T1.**

# Parts Counting

Purpose: This application is used to determine the number of objects which each have approximately equal weight. This saves you from having to count individual parts.

Options: You can calculate or enter the piece weight of individual objects.

Combination options: Checkweighing, timer-controlled functions, totalizing, statistics, formulation, mass unit conversion, second tare memory, individual identifiers, (SQmin function, DKD measurement uncertainty)

## Configure Task: Parts Counting

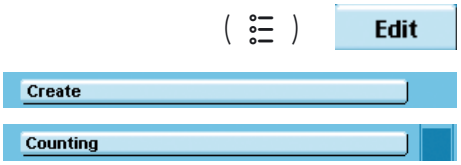


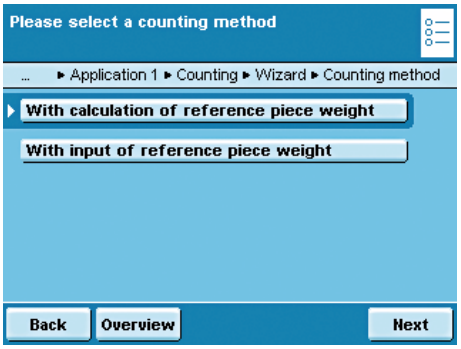


▶ Select the method that you want to use.
***With calculation of reference piece weight:** The piece weight is determined by weighing a known reference piece quantity.
**With input of reference piece weight:** The piece weight is entered as a numerical value.

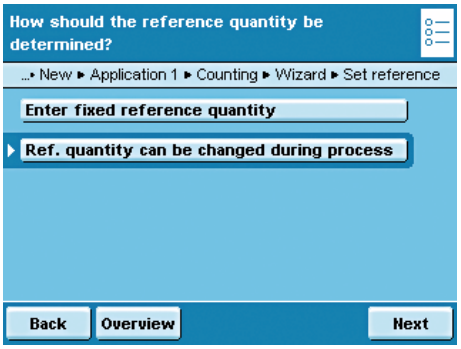


With **calculation of the piece weight**:

▶ Define how the reference piece count should be entered.
**Enter fixed reference quantity**: You must enter this reference piece count **nRef** now.
***Ref. quantity can be changed during process**:
The reference piece count is entered when the task is executed.

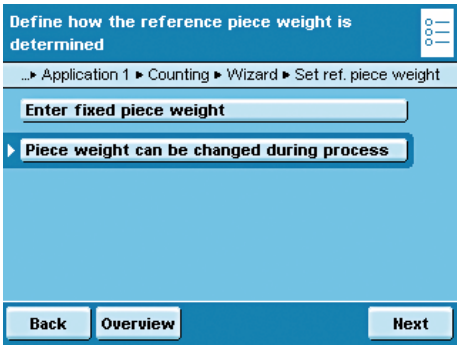


When **entering** the piece count:

▶ Define how the piece weight should be entered.
**Enter fixed piece weight**: You must enter this piece weight **wRef** now.
***Piece weight can be changed during process**: The piece weight is entered when the task is carried out.

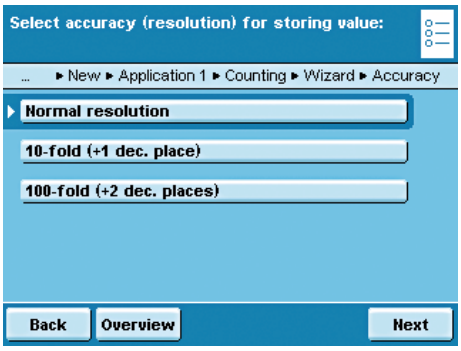


▶ Define the accuracy to be used for the weight value.
***Normal resolution**: As displayed
**10-fold (+1 dec. place):** With one decimal place more than in the display
**100-fold (+2 dec. places):** With two decimal places more than in the display

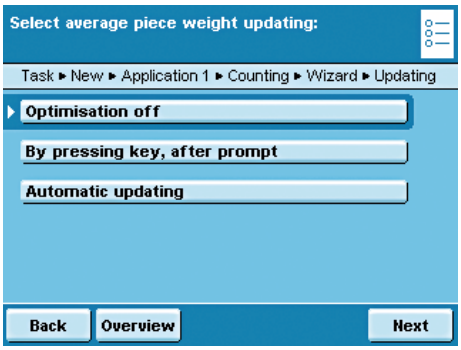


Only with **calculation of piece weight**:

▶ Define whether or not the piece weight should be updated when counting.
**Optimisation off**
**By pressing key, after prompt**
***Automatic updating**

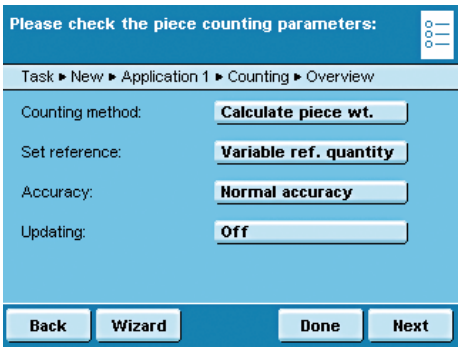


▷ An overview of all settings is displayed.
▶ Check all settings and change as required.

▷ A message asks whether you would like to add another application.
▶ If required, select additional applications to be combined.

▷ Now you will be prompted to configure the weighing and printing functions.
▶ Check all settings and change as required.
▶ Enter a short name and a description for the new task.
▶ To save the new task, touch **Save**.

## Execute Task:
## Parts Counting with Piece Weight Calculation

( ☰ )

▶ If you haven't already done so, go to Application Management.
▷ The task selection is displayed.
▶ Touch the desired task.
or

Start

▶ If the desired task is already selected, touch **Start**.

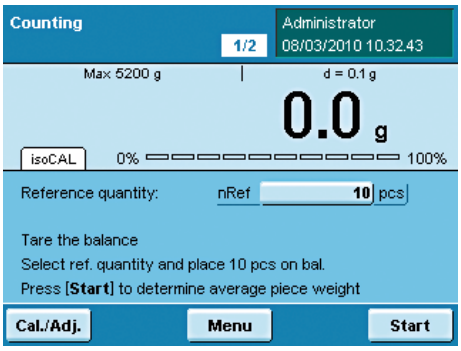


▷ The last used reference piece quantity **nRef** is displayed.
▶ If you are working with a variable reference piece quantity, you must enter or change this now.
▶ Place this exact amount (nRef) of the objects to be counted on to the weighing pan.

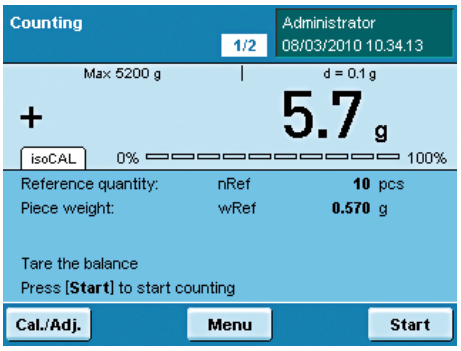


▷ The weight value for the reference objects is displayed.
▶ To determine the average piece weight, touch **Start**.

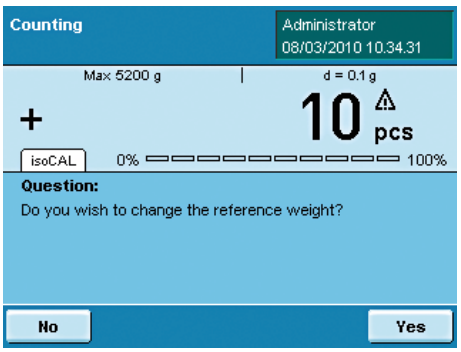


▷ The reference piece count and the average piece weight are displayed.
You can now begin with the parts counting of unknown amounts.

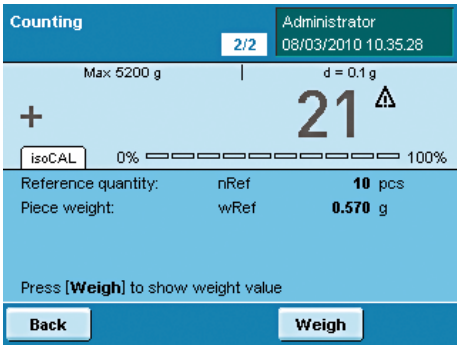


▶ Place any amount of the objects on to the weighing pan.
▷ The determined piece count is displayed.

▶ To display the weight value of this amount, touch **Weigh**.

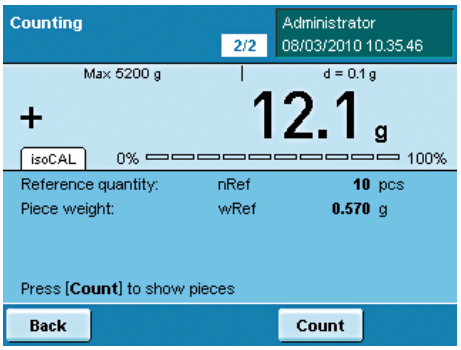


▷ The weighing results and all parameters are displayed.

▶ To count the next unknown amount, empty the weighing pan and place the next amount of objects on to it.
▷ The calculated piece count and the weighing results are immediately updated.

## Execute Task: Parts Counting by Entering the Piece Weight

( ☰ )

▶ If you haven't already done so, go to Application Management.
▷ The task selection is displayed.
▶ Touch the desired task.

or

Start

▶ If the desired task is already selected, touch **Start**.

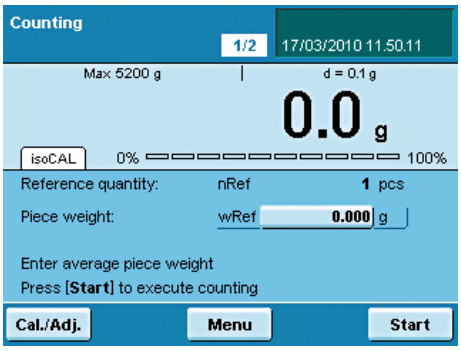


▷ The last used piece weight **wRef** is displayed.
▶ Enter the piece weight of the reference object (e.g., 50 g).

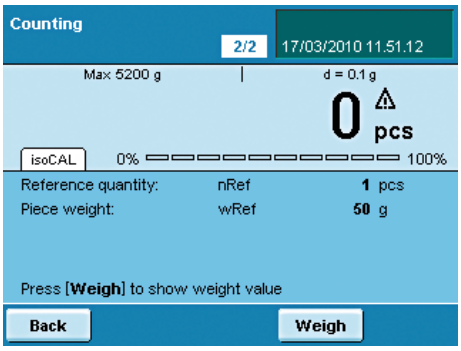


▷ The reference piece quantity and the entered piece weight are displayed.

▶ Place the sample with the objects to be counted on to the weighing pan.

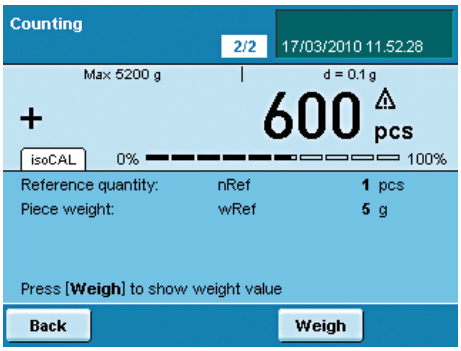


▷ The determined piece count is displayed.

▶ To display the weight of the sample, touch **Weigh**.

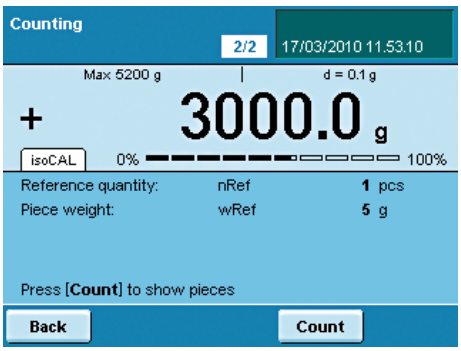


▷ The weight of the sample is displayed.
▶ To toggle between the display of weight value and piece count, touch **Count** or **Weigh**.

▶ To count the next quantity of objects, empty the weighing pan and place the next sample on to it.
▷ The weighing result is updated immediately.
▶ To display the piece count of this sample, touch **Count**.

# Checkweighing

Purpose: This application is used to check a weight value using preset control values.

Options: Control values can be exact target values or tolerance range limit valueswithin which the check value must lie.
The check results are shown on the display. They can also be used for further electronic editing by activating the control ports at the data output.

Combination options: Totalizing, statistics, formulation, mass unit conversion, second tare memory, individual identifiers, (SQmin function, DKD measurement uncertainty)

## Configure Task: Checkweighing

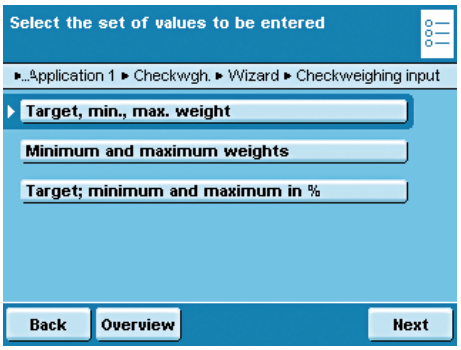


▶ Define which values are to be used for checkweighing.
***Target, min., max. weight** The target value and a tolerance range in absolute values
**Minimum and maximum weights:** Only a tolerance range in absolute values
**Target; minimum and maximum in %:** The target value and a tolerance range as a percentage

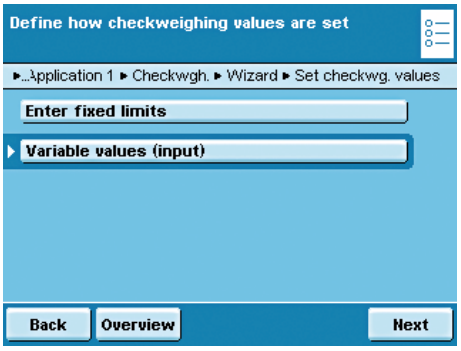


▶ Define how the control values will be entered.
**Enter fixed limits:** You must enter these values now.
***Variable values (input):** The check values are entered when the task is carried out.

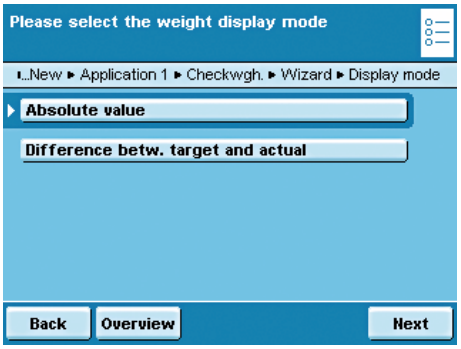


▶ Select the display mode for the results.
***Absolute value:** Displays the absolute value.
**Difference betw. target and actual**: The deviation from the target value is then displayed.

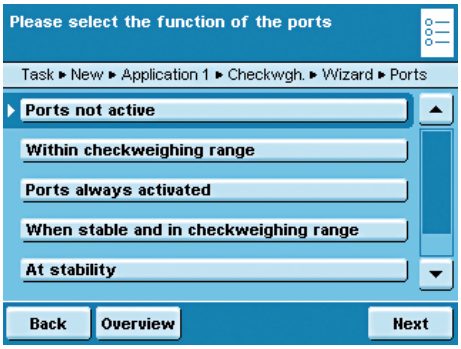


▶ Define how the ports should be activated depending on the check results.

***Ports not active**

**Within checkweighing range**: Ports are only activated when the results are within the checkweighing range.

**Ports always activated:** The ports are always activated with each weight value.

**When stable and in checkweighing range**: The ports are only activated as soon as the balance becomes stable and the results are in the checkweighing range.

**At stability:** The ports are always activated as soon as the balance has stabilized.

**Once at stability and in the checkweighing range**: The ports are activated on a one-time basis (not dynamically) as soon as the balance has stabilized and the results are in the checkweighing range; effective until the balance has been unloaded.

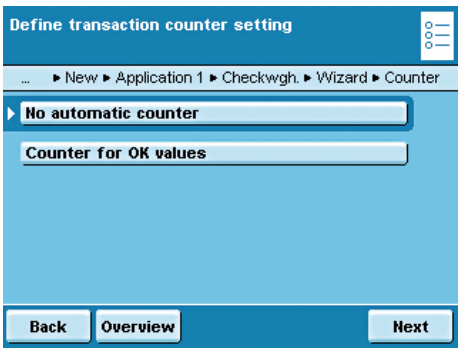


▶ Define whether or not the automatic counter for positive results should be activated.

***No automatic counter**

**Counter for OK values:** All positive checked results are counted.

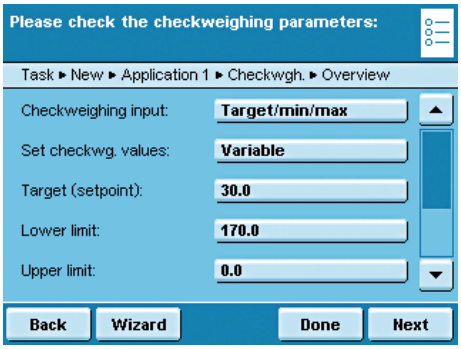


▷ An overview of all settings is displayed.
▶ Check all settings and change as required.

▷ A message asks whether you would like to add another application.
▶ If required, select additional applications to be combined.

▷ Now you will be prompted to configure the weighing and printing functions.
▶ Check all settings and change as required.
▶ Enter a short name and a description for the new task.
▶ To save the new task, touch **Save**.

## Execute Task: Checkweighing

( ☰ )

▶ If you haven't already done so, go to Application Management.
▷ The task selection is displayed.
▶ Touch the desired task.

or

Start

▶ If the desired task is already selected, touch **Start**.

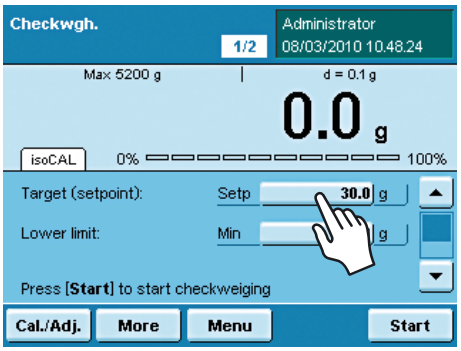


Define check values **by entry**:
▶ Touch the input field Setp and enter the target.
▶ Touch the input field Min or Max and enter the minimum or maximum check values.

or

Define check values **with current load**:
▶ Place the weight on the weighing pan.
▶ Touch **More**.

More

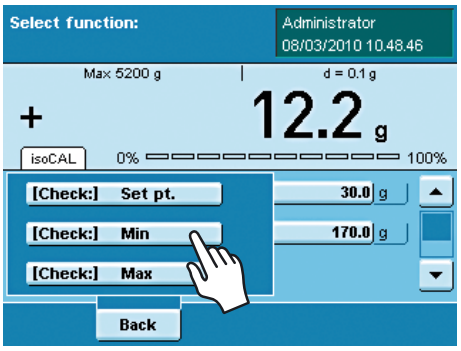


▶ Touch the field of the check value whose current weight value you want to use.
▶ If required, repeat the process with additional weights for the other check values.
▶ To exit the input mode **without saving the value**, touch **Back**.

▶ To begin checkweighing, touch **Start**.

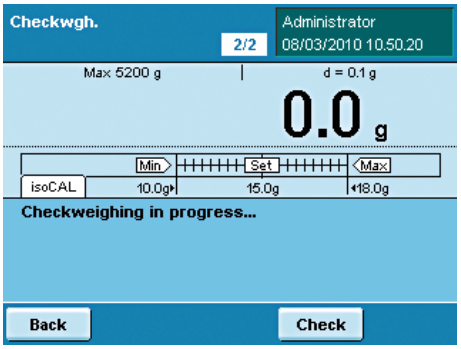


▷ The entered check values are displayed graphically.

▶ Place the object to be checked on the weighing pan.

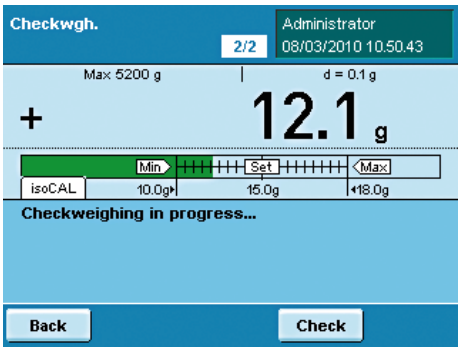


▷ The test results are displayed.
If the results are within tolerance, the weight results will always be displayed.
In addition, they appear in green on in the graphic scale.

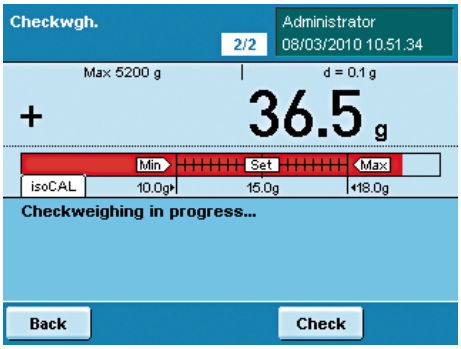


If the results are outside of the tolerance, the weight results are displayed in red (above maximum) or yellow (below minimum) on the graphic scale.

▶ To toggle the display to the check mode, touch **Check.**

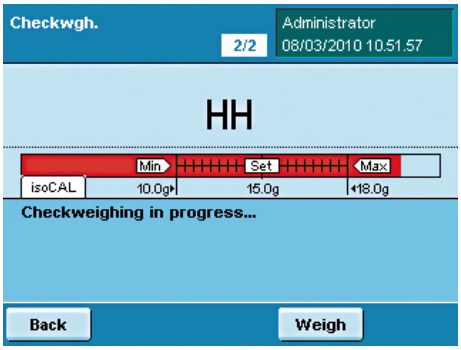


▷ Now the display will show whether the upper limit (**HH**) or the lower limit (**LL**) has been exceeded.

▶ To check additional objects, empty the weighing pan and place the next object on it.

▷ The display is updated dynamically.

▶ You can toggle between weighing and checkweighing at any time by touching **Weigh** or **Check.**

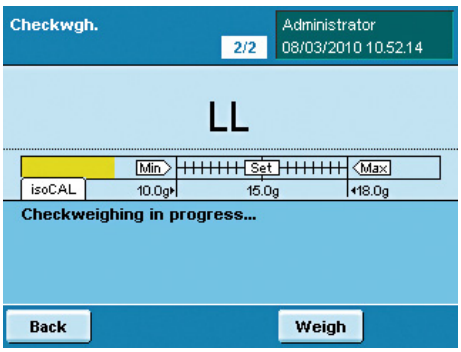

# Importing/Exporting Data

You can use an SD memory card to transport and exchange data (import/export). This card is required when you want to save data externally or when you want to exchange data with other balances. For example, you can easily copy menu settings, tasks, and user profiles to several balances.

### Inserting Memory Card into the Display and Control Unit

The slot for the SD card is located at the back of the display and control unit.

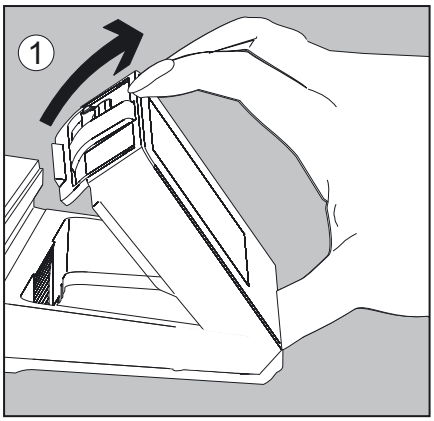


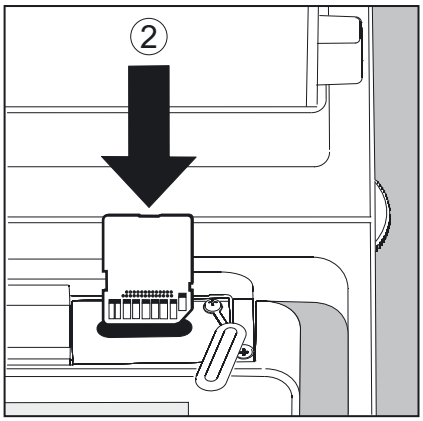


1. Tilt the control unit until is it nearly vertical.
2. Swivel the cover of the card slot to the front. Align the SD card so that the contacts are facing down.
3. Insert the card into the slot as far as it will go.

▶ To remove the card, press it against the resistance in the direction of the slot so that the card springs out.

4. Press the position retainer and swivel the display and operating unit back into the desired position.

## Importing/Exporting Data

The following data can be imported or exported via the SD card:
– Global tasks and separate tasks
– User profiles with their separate tasks
– Menu parameters
– Alibi memory
– Audit trail
– Calibration and adjustment data
– Individual customer-specific applications (“Q-Apps”)

You can open the data from the Alibi memory (XML files) with any web browser and import them to Microsoft Excel as well.

▶ Select the menu item **Import/export data.**

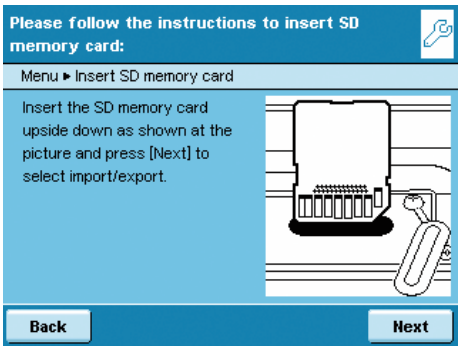


▶ Insert the SD card into the slot as shown in the picture.

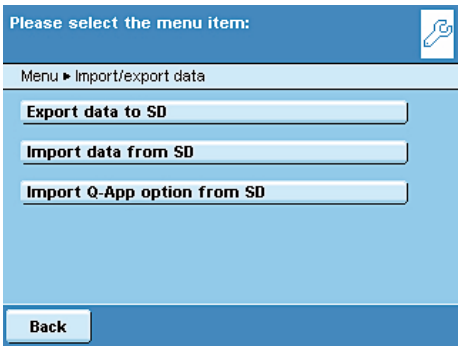


▶ Select whether you wish to export or import data.

## Export

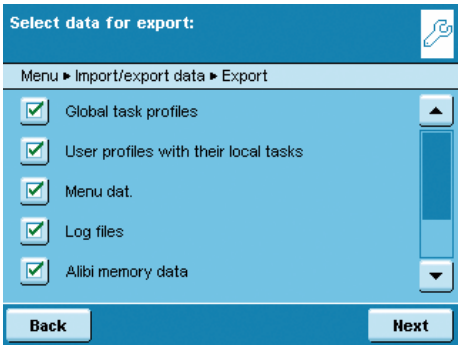


▶ Select the data you wish to export and press **Next**.

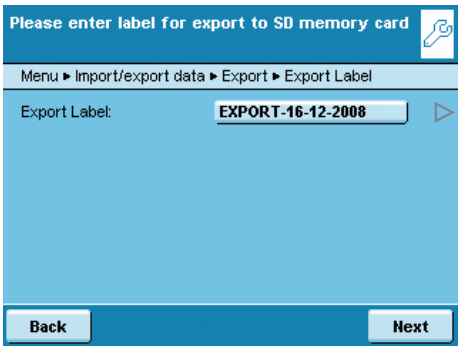


▶ If required, change the name of the export folder and touch **Next.**
▷ The data is copied to the SD card.

An icon is shown on the display during the data transfer.
The device cannot be operated during this time.

## Import

In order for the data to be detected by the balance when importing them, you should not copy individual files, but always the entire subdirectory.

- data
  - all
    - EXPORT-dd-mm-yyyy
      - task

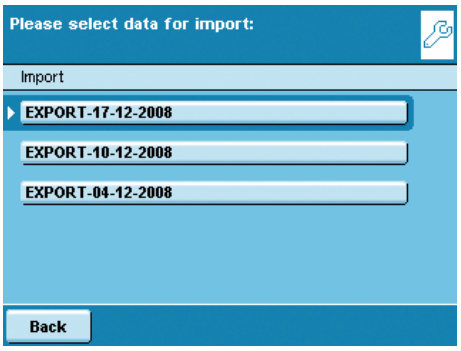


▶ Select the folder on the SD card from which you want to import data.

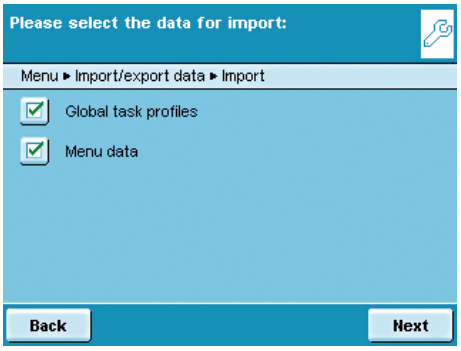


▶ Select the data that you want to import and touch **Next.**

▷ The data will be imported from the SD card.

▷ An icon is shown on the display during the data transfer.
The device cannot be operated during this time.

If the following error message appears:
"**Wrong XML version. Please check the data.**"

▶ Touch **Next**.

▷ All previous data will be saved in the new format.

▶ Check your settings after importing the data (Menu, TASK and USER).

▶ If the XML files continue to cause problems, contact your local Sartorius service center.

# Calibration and Adjustment

Background

During **calibration**, a check weight is used to determine how much the displayed value deviates from the actual measurement value. This deviation is compared with an entered target value and this deviation is then eliminated by a subsequent **adjustment** of the balance. During **linearization**, the deviation of the values from the ideal characteristic curve is cleared.

M

Not all functions/settings can be selected on balances used in legal metrology!

When and how often

Calibration/Adjustment should be carried out on a **regular** basis, e.g., daily after the balance is turned on. In addition, it should be done **after each leveling** and always when the ambient conditions have changed (temperature, humidity or air pressure), and when the balance has been set up in another location.

**isoCal**

All Cubis balances are equipped with the automatic calibration function **isoCal** (time and temperature-controlled). You can adapt this function according to your requirements. You can set up a **memory function** that triggers a prompt for calibration/adjustment at specified intervals.

The process for the calibration/adjustment function may differ depending on the presets (see System Settings/Configuring Calibration/Adjustment). The factory settings have not been changed for the procedure described here.

## Calibration/Adjustment Using Internal Check Weight

- If required, switch to operating mode.
- Make sure that the weighing pan is empty.
- (TARE) Press **TARE**, to tare the balance.

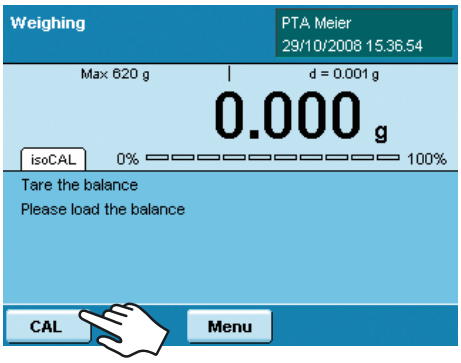


- Touch **CAL.**

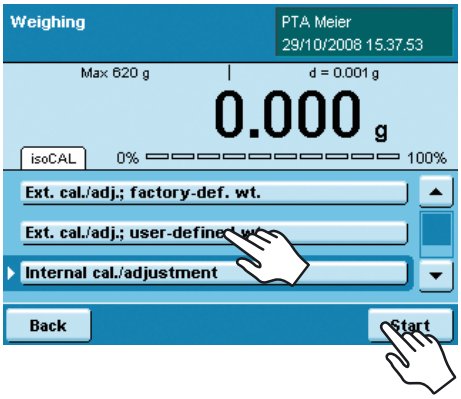


- Touch **Internal cal./adjustment** and then **Start**.

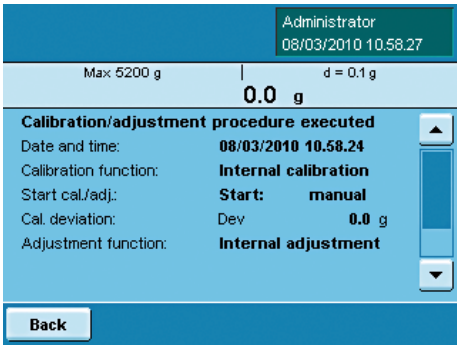


▷ The procedure will be executed.
▶ Wait until calibration/adjustment has been completed.

▷ The results are displayed again after the procedure is completed.

▶ To return to operating mode, touch **Back.**

## Calibration/Adjustment Using External Check Weight

An external check weight is required for this function.
Please note the tolerance of the check weight being used.

▶ If required, switch to operating mode.
▶ Make sure that the weighing pan is empty.
▶ Press **TARE**, to tare the balance.

(**TARE**)

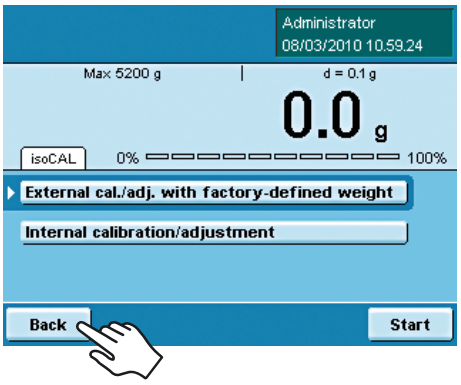


▶ Touch **CAL.**

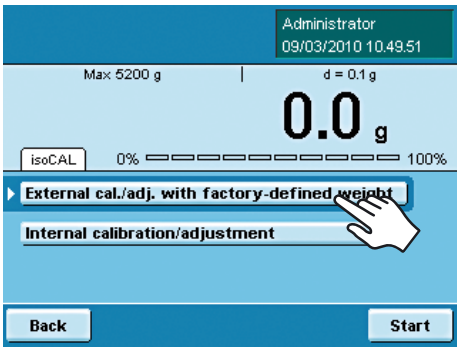


▶ Place the check weight on the balance.
▶ Touch **External cal./adj. with factory-defined weight.**

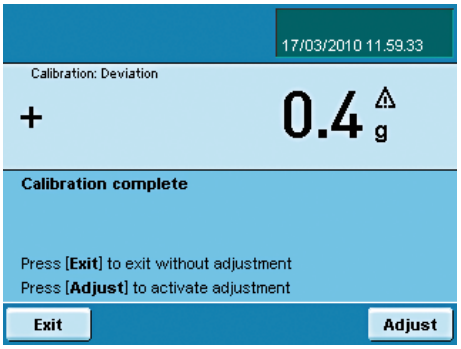


▷ Calibration is carried out (approx. 15 to 20 sec.).
▷ After calibration, the determined deviation is displayed.

▶ To adjust the balance, touch **Adjust.**
▶ To complete calibration without adjustment, touch **Exit.**

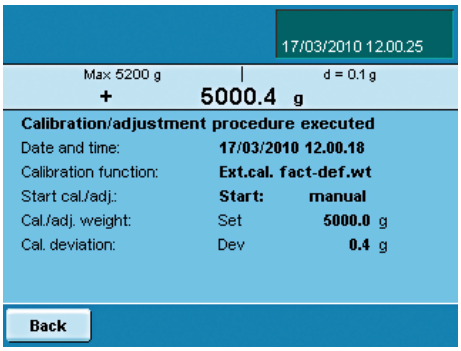


▷ Lastly, the results are shown on the display.

▶ To return to operating mode, touch **Back**.

# User Management

You can configure the following settings in this menu:
- Create new user profiles (only possible as administrator)
- Edit user profiles (modify, copy, delete, change and delete passwords, depending on user rights)
- Activate users

## User Management

The user administration allows for defining of users with distinct sets of rights: the Administrator and multiple users.
The **Administrator** can use all functions (except those in Service) and he has all user rights. Only he can create new user profiles and assign individual rights. There is only one administrator.
A **user**, on the other hand, cannot use all functions. He has limited rights. Rights that are defined in the user profile. A max. of 15 user profiles can be created.

When the balance is first delivered, there are no user profiles, all settings can be carried out. The first user profile that is created is automatically an administrator. He can then create additional user profiles.

( ) ▶ To open the User Management menu, touch the USER ( ) key.

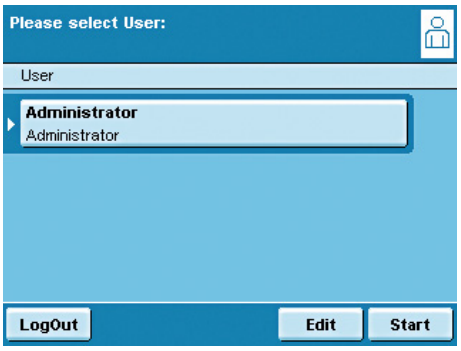


▷ The menu opens and the selection of user profiles is displayed.

## Creating User Profiles

This function is only available to an Administrator.

The following settings can be made in the user profile, they are only valid for that user:
- Language
- Display settings (color, brightness)
- Volume and acoustical signal on/off
- User rights
- Password protection
- User name and description

▶ To create a new user profile, touch **Edit.**

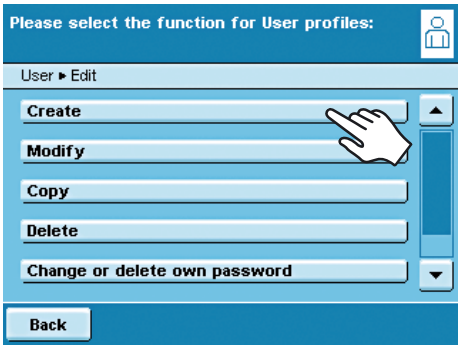


▶ Touch **Create**.

The program now automatically guides you through the menu. Make your selections by touching the desired option, the program then takes you to the next prompt.

or

If the desired option is already selected (dark background), touch **Next**, to go to the next prompt.
If more than one option can be selected for a single setting, press **Next** after making your selection(s) to proceed to the next prompt.

**Step 1: Select language**

▶ Touch the desired language.

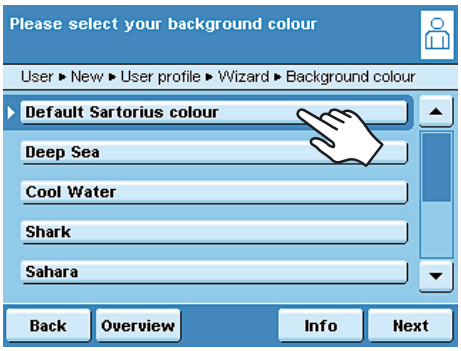


**Steps 2 to 4: Set the color and brightness of the display**

▶ To select the background color, touch the desired color.
The standard Sartorius factory setting for the background color is blue.

▷ The display changes to the color selection for the user field (see “Display in Operating Mode”).

▶ Touch the desired color for the user field.
The standard Sartorius factory setting for user fields is dark blue.

▷ The display changes to the brightness setting.

▶ To change the brightness of the display, touch the desired setting.

**Step 5: Assign user rights**

▶ Select the corresponding options to define which functions the user can access.
The following rights can be assigned individually:
– Creating, copying, modifying and deleting tasks
– Importing data
– Modifying the calibration and adjustment settings
– Modifying the balance settings
– Creating, modiying and deleting timer-controlled actions
– Exporting file
– Displaying device information
Administrators can access all functions.

▶ To move to the next menu item, press **Next**.

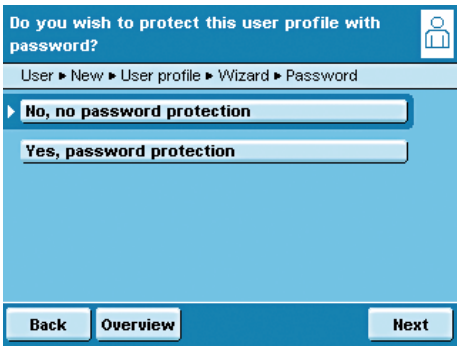


**Step 6: Define password protection**

If you assign a password, this profile cannot be used until the password has been entered.

▶ Select the corresponding option to define whether the user profile is password-protected or not.

The password will be defined in the step after next.

Only the Administrator can open the user profile without the password (for example, if the user forgets the password) and assign a different password. The Administrator can remove the password protection so that a new password can be set, if desired.

If the administrator forgets the password: Please contact your Sartorius Service Center

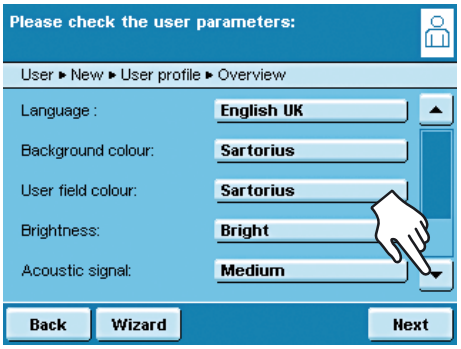


**Step 7: Check all settings**

▶ Use the scroll bar or press the down arrow to view all settings.

▶ To modify a setting, press the corresponding button. This opens a screen showing the options for that setting.

▶ If the settings are correct, press **Next**.

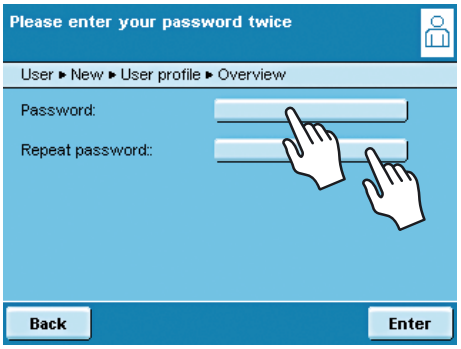


**Step 8: Define the password (if password protection enabled)**

▷ If you selected the option for password protection, you are now prompted to enter the desired password twice.

▶ Press the upper button.

▶ Enter the desired password (minimum 4 characters, maximum 8; only numbers and uppercase letters are permitted).

▶ Press the lower button, and enter the password again.

▶ Touch **Next**.

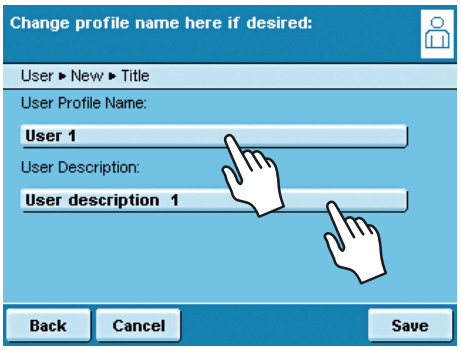


**Step 9: Enter user names and descriptions**

▶ To enter a name for the user profile, touch the **User** button. The user name is shown on the top right of the display during operation as long as the respective user profile is active.

▶ Enter the name (max. 40 characters) and touch **OK**.

▶ To enter a description of the user profile, touch the **User description** button. The user description can be viewed at any time during operation of the balance by pressing the user info area in the display (see “User Interface (Touch Screen)”).

▶ Enter the description and touch **OK**.

▶ To complete the process, touch **Save**.

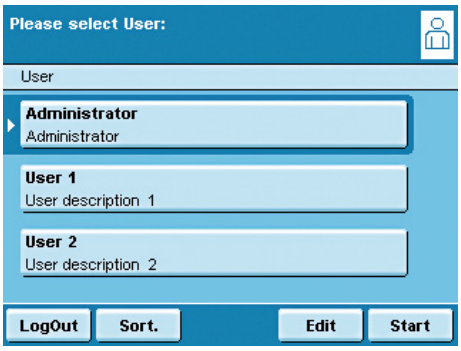


▷ The program switches to user selection. The newly created user profile is placed at the end of the list.

▶ When you want to activate a new user, just touch the button with his name.
▷ The program switches to the operating mode and the selected user is activated.

or

▶ If you want to set up additional user profiles, touch **Edit** and repeat the steps described.

or

▶ When you want to switch to operating mode without switching the user, touch **Start**.

## Activating Users

With the balance in the operating mode, the active user is displayed in the user field at the top right of the screen.
To activate another user, you must switch to the **User Management** menu.

( 🙍 )

▶ Press the USER key ( 🙍 ).

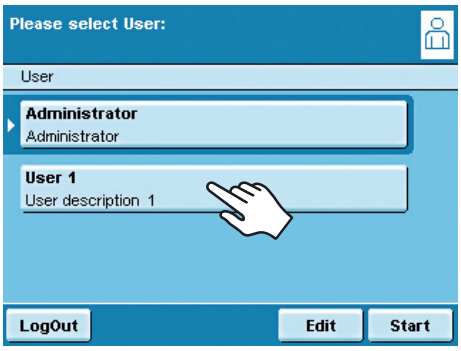


▷ The user selection is displayed. The current, active user can be recognized by the small arrow and the dark background.
▶ Touch the user you want to activate.
▶ If the user is password-protected, enter the password and confirm the entry.
▷ The program switches back to operating mode with the selected user activated and displayed at the top right of the user field.

# Editing User Profiles

( 👤 )

▶ If you have not already done so, open the User Management menu by touching the USER ( 👤 ) key.

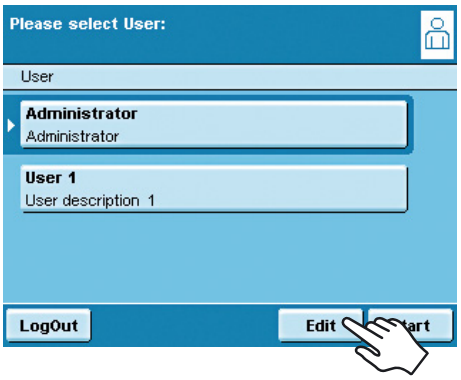


▶ To go to the Edit menu, touch **Edit** in the user selection.
▷ The selection of edit functions is displayed.

ⓘ Which options for editing user profiles are available depends on whether or not you have Administrator rights. The following table shows who can carry out which changes to user profiles. Accordingly, the displays shown in this section may differ from your screen because the administrator view is always shown here.

| Option | Administrator | User |
|---|---|---|
| Change own profile | ☑ | ☑ |
| Change other profile | ☑ | |
| Copy profile | ☑ | |
| Delete profile | ☑ | |
| Change or delete own password | ☑ | ☑ |
| Change or delete other user passwords | ☑ | |

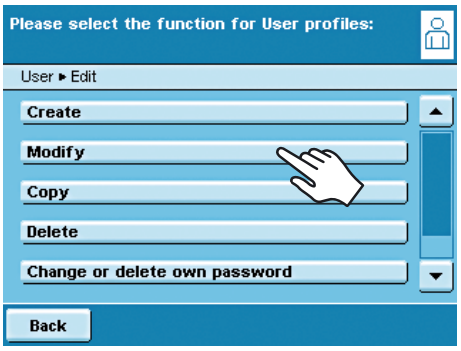


## Changing User Profiles

▶ Select **Modify**.
▶ If you are an administrator, you must now select the profile that you want to change and touch **Next**.
▷ The overview of all settings for this profile is displayed. You can now select and change the parameters one by one.
or
▶ If you want to use the automatic user guide (step-by-step), touch **Wizard**. Now all setting options will be displayed one by one to be changed.
▶ Touch **Next**.
▶ If required, change the user name and description.
▶ Touch **Save**.
▷ The user profile has been changed. The display changes to the user selection.

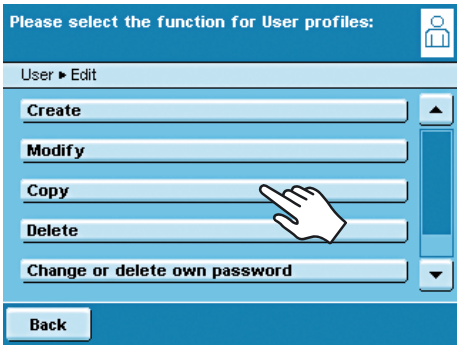


## Copying User Profiles

ⓘ This function can only be carried out by an administrator.

ⓘ When you copy a user profile with password protection, the password is not transferred to the copy, rather it is deleted.

▶ Select **Copy**.
▷ All available user profiles are displayed.
▶ Select the profile that you want to copy.
▶ Touch **Next**.
▶ Enter a new name and description for the copied user profile.
▶ Touch **Save**.
▷ The display switches to the user selection in which the new profile is displayed.

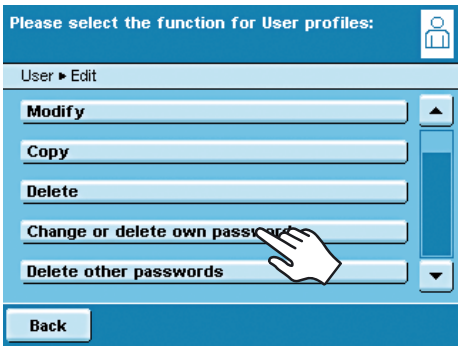


## Deleting User Profiles

ⓘ This function can only be carried out by an administrator.

- ▶ Select **Delete**.
- ▷ All available user profiles are displayed.
- ▶ Select the profiles that you want to delete and touch **Next**.

  or

- ▶ If you want to delete all profiles, touch **All**.
- ▷ All profiles selected for deletion are displayed in a security prompt.
- ▶ If you want to change your selection, touch **No**.

  or

- ▶ Confirm the deletion with **Yes**.

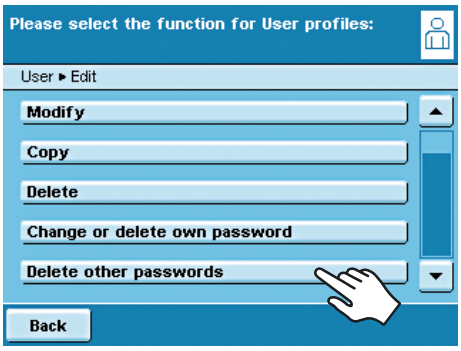


## Changing or Deleting Own Password

- ▶ If you haven't already done so, activate your own user profile.
- ▶ Touch **Edit.** in the user selection.
- ▶ Select **Change or delete own password**.
- ▶ To **change** the password, touch **Yes**.
- ▶ Touch both buttons one after the other and enter the new password twice.

or

- ▶ To **delete** the password, touch **No**.
- ▶ Touch **Next**.
- ▷ The display switches to the selection of change functions.

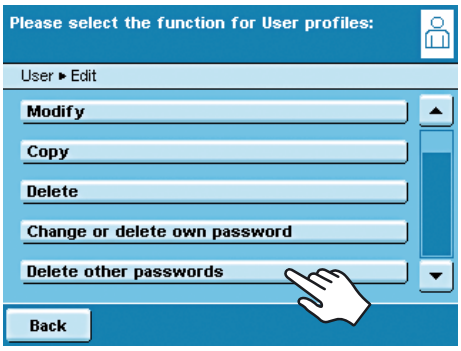


## Deleting Other User Passwords

ⓘ This function is only available to an Administrator.

- ▶ Activate your own profile.
- ▶ Touch **Edit** in the user selection.
- ▶ Select **Delete other passwords**.
- ▷ An overview of all users with passwords is displayed.
- ▶ Select all users whose passwords you want to delete and touch **Next**.

or

- ▶ If you want to delete all passwords, touch **All**.
- ▷ All users whose passwords you selected are displayed in a security prompt.
- ▶ If you want to change your selection, touch **No**.

  or

- ▶ Confirm the deletion with **Yes**.
- ▷ The display switches to the overview of user settings.

# Interfaces

Purpose

Interfaces are used to exchange data with ported peripheral devices:
Measured values and calculated values can be output to a printer, PC or control display; conversely, control commands and data inputs can be sent to ported devices (PC, keyboard, foot switch, barcode scanner).
Except for PS2, each interface has to be configured according to the peripheral device and desired function. No error messages are generated just because no device is connected to an interface port (open data port).

Features

Cubis series balances have at least three interfaces:

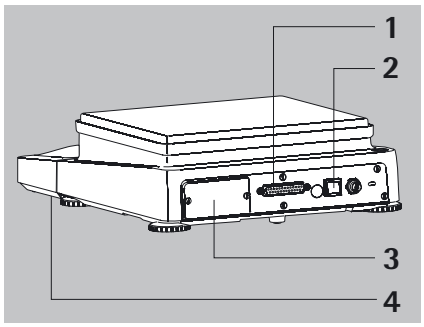


**1** Peripheral port (25-pin interface), **Com A**
**2** USB interface for a PC connection, **Com B**
**3** The slot may contain other ports **(Com C)**:
– 25-pin interface (YDO01MS-R)
– 9-pin interface with 6-pin PS2 port (YDO01MS-P)
– Bluetooth® module (YDO01MS-B)
**4** Ethernet interface (on the bottom of the display unit), **Com D**

Data Exchange Protocols

For data exchange, the interfaces are configured with the following protocols:
– **Printer output**
– **SBI** (Sartorius Balance Interface): Sartorius standard protocol for output to a PC or control unit. This simple ASCII-based protocol allows you to use ESC commands from your PC to control the basic weighing functions.
– **xBPI** (eXtended Balance Processor Interface, also called X-Bus): Binary protocol with extended command volume. This protocol lets you control numerous weighing functions. For further information on this, please contact Sartorius.
– **SICS** and mini-SICS (Standard Interface Common Set): This interface protocol enables operation and control of the balance via a connected PC. You can read out measurement data, enter weighing commands and activate all operating functions.

To use the protocols, application software must be installed on the PC, e.g., SartoTerminal.

Synchronization

During data communication between balance and PC, messages consisting of ASCII or binary characters are transmitted via the interface. For error-free data exchange, parameters for baud rate, parity, handshake mode and character format must be identical for both units.

You can configure the respective settings in the System Settings menu. In addition to these settings, data output for the balance can also be made dependent on several conditions that are defined in the individual tasks. These conditions are described under each of the tasks.

# USB Port (PC)

Purpose

Any Cubis balance can be connected to a PC equipped with a USB port. A virtual serial interface (virtual COM port) is set up as a device type at the USB port. This virtual serial interface is identified und operated by the application program.
The protocols xBPI, SBI and SICS can be transferred via the USB port.

The USB port is designed for the laboratory environment and is not suitable for use in purely industrial environments. Full IP protection is only guaranteed when the USB cover is closed.

System Requirements

- Computer (PC) with Windows 98SE®, Windows ME®, Windows 2000®, Windows XP®, Windows Vista® or Windows 7®
- Available USB port on the PC
- USB cable

Software Driver and Installation Guides

The VCP driver, used to set up the virtual interface on the computer, can be downloaded from the internet: http://www.ftdichip.com/FTDrivers.htm

The installation guides for the drivers can be found here:
http://www.ftdichip.com/Documents/InstallGuides.htm

## Connecting the Balance via USB

The current USB port for the computer is established when the software driver is being installed. The driver must be re-installed every time you wish to change the port. Therefore, choose one USB port that can permanently or regularly be used to connect the balance.

- ▶ Switch off the balance.
- ▶ Unplug the balance from the mains.
- ▶ Connect the USB cable to the balance and to the USB port on the computer.
- ▶ Plug the balance into the mains again and switch it on.
- ▷ Windows detects the device connected to the USB port. If the device is being connected for the first time, the Windows Installation Wizard will run.

## Installing Software Drivers

- ▶ Run the Installation Wizard for the driver.
- ▶ Follow the instructions that appear.
- ▶ To complete the installation, click on **Finish**.
- ▷ The virtual interface is now ready for operation.

Windows® usually adds the virtual port in the position following your highest-numbered COM port.

Example: For a PC with up to 4 COM ports, the new virtual port would then be COM5 (see Device Manager).

**Installation Guides for Windows XP®, Windows Vista® and Windows 7®**

Changing the Port No.

If you use the USB interface with a program that limits the number of COM port designations (e.g., only COM1, 2, 3, 4), you may have to assign one of these port numbers to the new virtual port.

▶ Open the setting for the **USB serial port** in the Windows® system control panel:
– START > My Computer > Control Panel
– System > Hardware > Device Manager
▶ Open the **Connections** submenu.
▶ Double-click on **USB Serial Port**.
▶ Select **Port Settings** / **Advanced**.

Change Latency Time

▶ Open the settings for the USB serial port, following the above instructions.
▶ For a faster rate of communication, change the setting for the **Latency Timer** to 1 msec.

Plug & Play Mode in Autoprint (SBI)

▶ Open the settings for the USB serial port, following the above instructions.
▶ Stop the **Plug & Play mode** from running.

**Uninstalling the Driver**
The software driver for the USB connection can be uninstalled with the Windows® Uninstaller.

## PS2 Interface for Barcode Scanner or Keyboard

Via the PS2 port you can connect a bar code scanner or a PC "QWERTY" keyboard to enter data and operate the balance.

Installation

The interface installation is described in the installation instructions supplied.

Connecting the Device

▶ Plug the connector plug into the PS2 port on the balance.
▷ The input device is operational, no further settings are required.

Using the Input Device

You can input entries directly via the keyboard or bar code scanner whenever an input field is open in the display of the balance.

**Key Assignment of the PC Keyboard**
The five context-dependent buttons located at the bottom edge of the display are operated via the **function keys F1** to **F5** on the PC keyboard.

**Back**
**Esc**

Whenever the last button on the right is assigned with the function **Back**, this function can also be activated using the **Esc** key on the keyboard.

( ) **F9** The **TASK** key is operated via **F9** (Open Task menu).

( ) **F10** The **USER** key is operated via **F10** (Open User menu).

**Print** The **PRINT** key is operated via the Print key of the keyboard.

**Shift F1** Use the shift F1 to select the **first entry** of a menu.

**Shift F2** Use shift F2 to select the **second entry** of a menu.
etc.

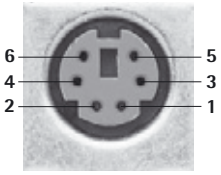


**Pin Assignment PS2**
Pin 1: Keyboard_DATA (universal)
Pin 2: Not assigned (larger)
Pin 3: Internal ground (GND)
Pin 4: +5 V
Pin 5: Keyboard_CLK (Set)
Pin 6: Not assigned (smaller)

## Interfaces (RS-232) 25-pin and 9-pin

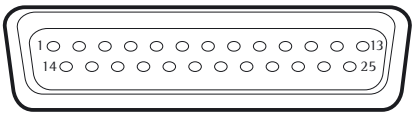


The balance is standard-equipped with a 25-pin interface (**peripheral port**) where different Sartorius peripherial devices can be connected, e.g., hand or foot switch. This interface is also used for the control lines for the **Checkweighing** application.

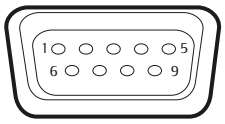


A 9-pin interface can be optionally installed. This port is intended for connecting a PC.

**Warning when Using Pre-wired RS-232 Connecting Cables for the 25-pin Interface:**
RS-232 cables purchased from other manufacturers often have incorrect pin assignments for use with Sartorius devices. Failure to do so may damage or destroy your weighing system and/or peripheral devices!

- ▶ Be sure to check the pin assignments before you connect cables purchased from other manufacturers.
- ▶ Disconnect any lines assigned differently (e.g., Pin 6).

**Features** (*= Factory settings)

| | | |
|---|---|---|
| Type of interface: | | Serial Interface |
| Interface operating mode: | | Full duplex |
| Level: | | RS-232 |
| Interface connector: | | D-SUB female connector, 25- or 9-pin |
| Transmission rate: | | 600, 1200, 2400, 4800, *9600 and 19200 baud (selectable) |
| Parity: | | *Even, odd, none; blank spaces (selectable) |
| Character transmission: | | Start bit, 7/*8 bit ASCII, parity, *1 or 2 stop bits (selectable) |
| Handshake (selectable): | 25-pin | For 2-wire interface: Software (XON/XOFF)<br>for 4-wire interface: *Hardware (CTS/DTR) |
| | 9-pin | Hardware (CTS/RTS) |
| Operating mode: | | *SBI, xBPI, printer, SICS, 2nd display |
| Manual print mode | | Without stability, *after stability |
| Auto print mode | | *Without stability, at stability, after load change |
| Cancel automatic printing: | | Not possible |
| Time-dependent automatic printout: | | After 1 display update |
| Data output of balance: | | 16 or *22 characters |
| Tare after individual printout: | | Off |
| Basic values, application: | | Off |

Connectable Peripherials

The following devices can be ported to the interface:

- Verifiable data printer YDP03-0CE, YDP10-0CE, YDP20-0CE
- Verifiable data printer with Bluetooth data transmission YDP10BT-0CE (module required)
- Universal (serial printer)
- Strip/label printer YDP04IS-0CEUV
- Hand switch YHS01
- Foot switch YFS01, YPE01RC
- External control display YRD11Z
- Remote display YRD03Z

## Pin Assignment Chart for Connecting Peripherals

Purpose: For Sartorius peripheral devices

Female Interface Connector: 25-pin D-Submini (DB25S) with screwed fastening

Required Male Connector (Recommended): 25-pin D-Submini, DB25S, with integrated shielded cable clamp and shield plate assembly (Amp type 826 985-1C) and fastening screws (Amp type 164 868-1)

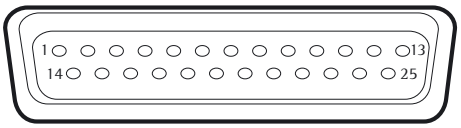


**Pin assignment 25-pin socket, RS-232:**

Pin 1: Signal ground
Pin 2: Data output (TxD)
Pin 3: Data input (RxD)
Pin 4: Signal GND
Pin 5: Clear to Send (CTS)
Pin 6: Not used
Pin 7: Internal ground (GND)
Pin 8: Internal ground (GND)
Pin 9: Not used
Pin 10: Not used
Pin 11: + 12 V output
Pin 12: Reset _ Out[1])
Pin 13: + 5 V output
Pin 14: Internal ground (GND)
Pin 15: Control input/output 1[2])
Pin 16: Control input/output 2[2])
Pin 17: Control input/output 3[2])
Pin 18: Control input/output 4[2])
Pin 19: Control input/output 5[2])
Pin 20: Data Terminal Ready (DTR)
Pin 21: Not used
Pin 22: Not used
Pin 23: Not used
Pin 24: Not used
Pin 25: +5 V output

[1]) = Peripherals restart
[2]) = Allocation of control input/outputs menu- is configurable (see below)

**Control Inputs/Outputs**

| Data Output / Setting | Pin 15 | Pin 16 | Pin 17 | Pin 18 | Pin 19 |
|---|---|---|---|---|---|
| **Infrared sensor YHS01MS** | Input 1: * “PRINT” key | Output 2: ** “Smaller” | Output 3: ** “Equal” | Output 4: ** “Larger” | Output 5: ** “Setp” |
| **Hand switch YHS02** | Input 1: * “PRINT” key | Output 2: ** “Smaller” | Output 3: ** “Equal” | Output 4: ** “Larger” | Output 5: ** “Setp” |
| **Foot switch YFS01** | Input 1: * “PRINT” key | Output 2: ** “Smaller” | Output 3: ** “Equal” | Output 4: ** “Larger” | Output 5: ** “Setp” |
| **Triple Foot switch YPE01RC** | Input 1: Left * “PRINT” key | Input 2: Right *Left Shieldpl.key | No function (disabled) | No function (disabled) | Input 5: Center * “TARE” key |
| **Control display YRD11Z** | Output 1: Currently no function | Output 2: ** “Smaller” | Output 3: ** “Equal” | Output 4: ** “Larger” | Output 5: ** “Setp” |
| **Control inputs** | Input 1: * “PRINT” key | Input 2: *Left Shieldpl.key | Input 3: *no function | Input 4: *no function | Input 5: * “TARE” key |
| **Control outputs** | Output 1: Currently no function | Output 2: ** “Smaller” | Output 3: ** “Equal” | Output 4: ** “Larger” | Output 5: ** “Setp” |

* Default allocation of input, otherwise configurable
** Allocation of outputs, on checkweigher

**Cabling Diagram 25-pin Interface**
Diagram for connecting a computer or other peripheral device to the balance using the RS-232/V24 standard and cables up to 15 m (50 ft.) long

**Do not connect any other pins to the cable connector of the balance!**

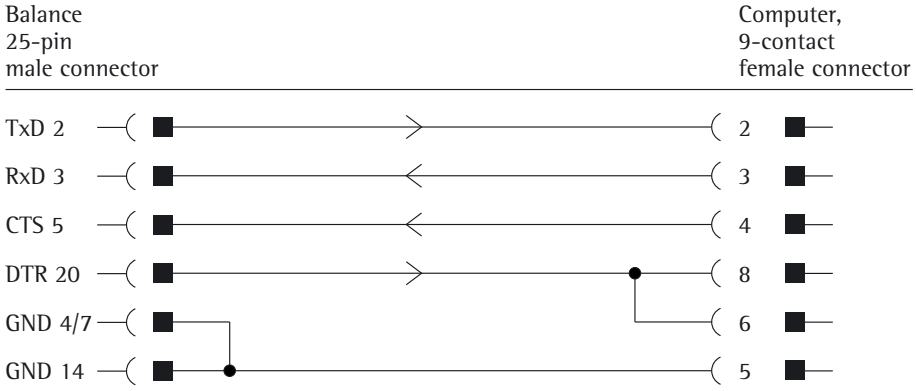


Cable type: AWG 2 specification

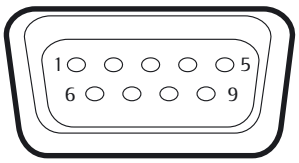


**Pin assignment 9-pin socket, RS-232:**
Pin 1: Not used
Pin 2: Data output (TxD)
Pin 3: Data input (RxD)
Pin 4: Not used
Pin 5: Internal ground (GND)
Pin 6: Not used
Pin 7: Clear to Send (CTS)
Pin 8: Request to Send (RTS)
Pin 9: Not used

Establish a connection via a conventional RS-232 cable.

# Configuring Serial Ports

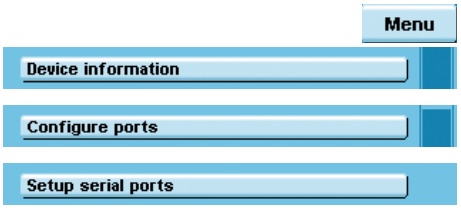


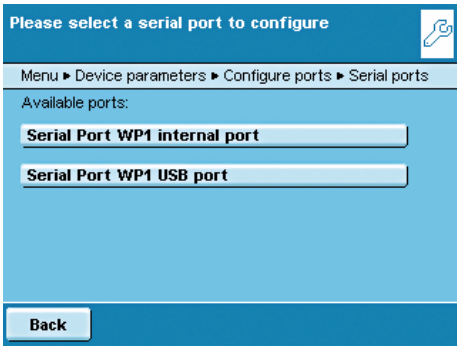


▷ The available interfaces are displayed.
▶ Select the interface you want to configure.
▶ Determine all settings for this interface.

▶ To save settings, touch **Save**.

## Configuration Options for the Serial Interfaces

The following **operating modes** are possible for these interfaces:
- No function; the interfaces is blocked
- xBPI
- SBI
- Remote display (SBI)
- Printer output
- SICS

Factory settings are marked with an *.

### Configuration Options for the xBPI Operating Mode

For this operating mode, you can only configure baud rate and number of stop bits.

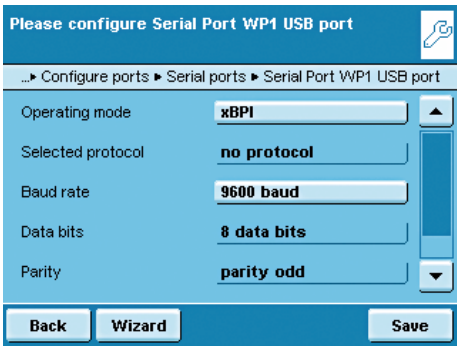


- Selected protocol: No protocol (fixed setting)
- Baud rate: ***9600** to **115200 Baud**
- Data bits: 8 (fixed setting)
- Parity: Odd (fixed setting)
- Stop bits: ***1** or **2** stop bits

### Configuration Options for the SBI Operating Mode and Remote Display

You can change all settings for this operating mode.

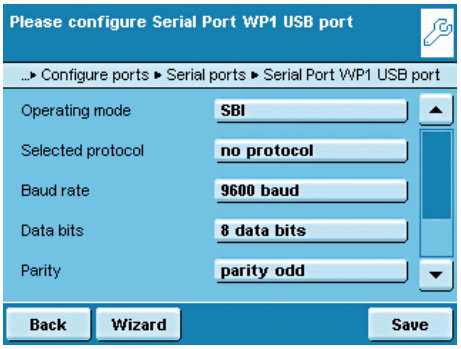


- Selected protocol: **No protocol/software handshake XON;XOFF/*Hardware handshake RTS;CTS**
- Baud rate: **300** to **19200 baud** (for remote display up to 115200 baud), *9600
- Data bits: **7** or ***8**
- Parity: **None**/***Odd** (odd)/**Even** (even)
- Stop bits: ***1** or **2** stop bits
- Log data: ***Turn off/Turn on**

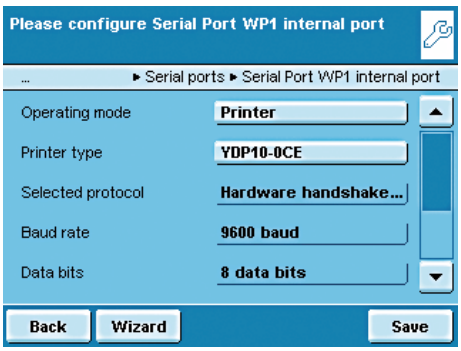


### Configuration Options for the Printer Output Operating Mode

You can modify all settings for this operating mode depending on the configured printer type.

- Printer type: **YDP10-0CE**/**YDP20-0CE**/**YDP03-0CE**/**Universal**/ **YDP04IS-0CEUV**
- Selected protocol: Hardware handshake
- Baud rate: 300 to 19200 baud (*9600)
- Data bits: 7 or *8
- Parity: **None**/***Odd** (odd)/**odd** (even)
- Stop bits: *1 or 2 stop bits
- Log data: ***Turn off**/**Turn on**

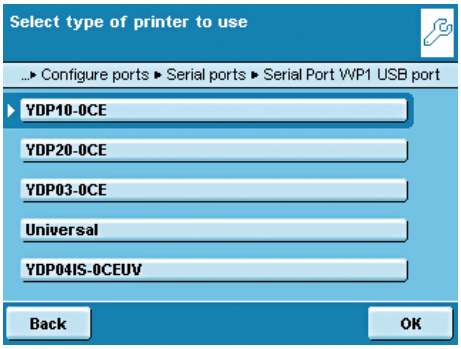


The following setting options are available for the **Printer types**:

- **YDP10-0CE**: No setting option, all parameters are permanently defined
- **YDP20-0CE**: All can be configured except stop bits
- **YDP03-0CE**: All can be configured except data bits and stop bits
- **Universal**: All can be configured
- **YDP04IS-0CEUV**: No setting option, all parameters are permanently defined
- **YDP10BT-0CE** (only for optional Bluetooth module, Com C): No setting option, all parameters are fixed

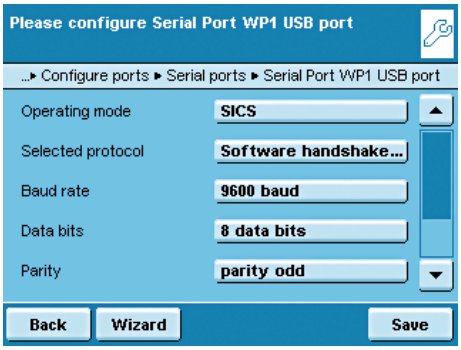


### Configuration Options for the SICS Operating Mode

You can change all settings for this operating mode.

- Selected protocol: **No protocol**/***Software handshake XON;XOFF**/***Hardware handshake RTS;CTS**
- Baud rate: **300** to **115200 Baud**, *9600
- Data bits: **7** or ***8**
- Parity: **None**/***Odd**/**Even**
- Stop bits: ***1** or **2** stop bits
- Log data: ***Turn off**/**Turn on**

## Explanations for the Setting Parameters

**Selected Protocol/Handshake**
The SBI (Sartorius Balance Interface) has transmit and receive buffers.
Data transmission can be operated with a hardware or software handshake.

Hardware Handshake (CTS/DTR): With a hardware handshake (4-wire interface) protocol, the handshake is controlled via the CTS and DTR lines.

Software Handshake (XON, XOFF): The software handshake is controlled via the XON and XOFF control commands. When the device is switched on, XON must be transmitted to enable any connected device to communicate.

Data transmission:

```
Balance                  --- byte --->        PC
(transmitting device)    --- byte --->        (receiving device)
                         --- byte --->
                         --- byte --->
                       <--- XOFF ---
                         --- byte --->
                         --- byte --->
                         ...
                            (Pause)
                         ...
                       <--- XON ---
                         --- byte --->
                         --- byte --->
                         --- byte --->
                         --- byte --->
```

Transmitting Device: Once XOFF has been received, it prevents further transmission of characters. Once XON has been received it re-enables the transmitting device to send data.

Receiving Device: To prevent too many control commands from being received at one time, XON is not transmitted until the buffer is almost empty.

# Bluetooth® Interface (COM C, Optional)

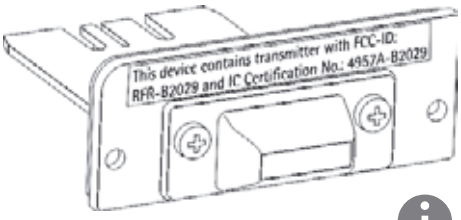


How to assemble the Bluetooth® module is described in the installation instructions supplied.

For transmitting data via the Bluetooth module, the data output has to be configured in the System Settings as follows.

## Configuring the Bluetooth® Interface

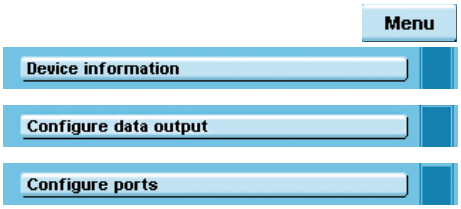


- ▶ If appropriate, toggle to the System Settings menu.
- ▶ Select the **Device information** submenu and slide the right scroll bar down.
- ▶ Select **Configure ports**.

- ▶ Open the **Serial ports** submenu.

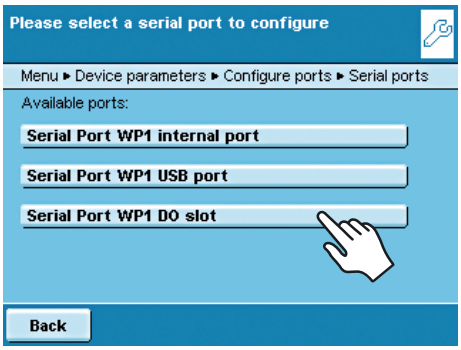


- ▶ Select **Available ports**.

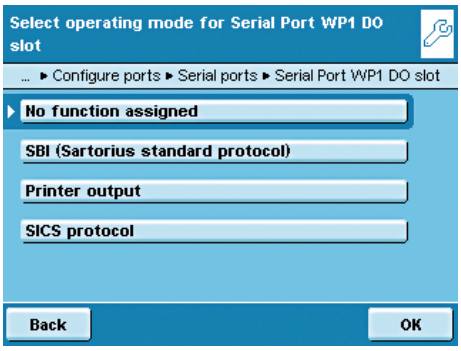


The following **operating modes** are available for this port:
- No function
- SBI (data exchange with PC or notebook)
- Printer output
- SBI (data exchange with PC or notebook)

- ▶ Select the desired operating mode.

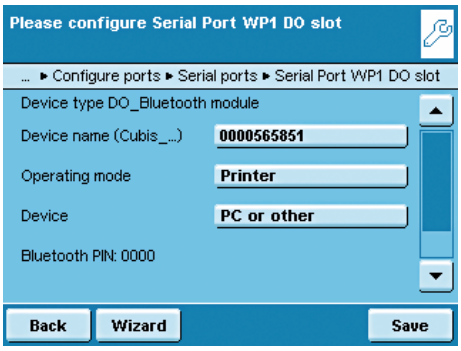


### Bluetooth Printer Output Operating Mode

- ▶ If required, you can change the device name (only with Bluetooth modules from Version 04-10-01).

- ▶ To connect a PC/Notebook, select **PC or other**.

### Connecting a Bluetooth Printer

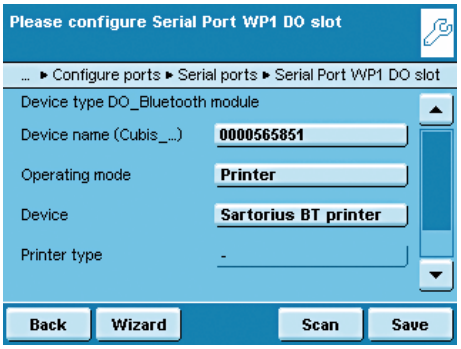


- ▶ Make sure that the printer to which you wish to connect is ready to operate.
- ▶ Select the **Sartorius BT printer** as the device.
- ▶ To establish the connection, select **Scan**.
- ▷ The balance will now search for the Bluetooth device. This process may take time. Wait for the next message to appear on the display.

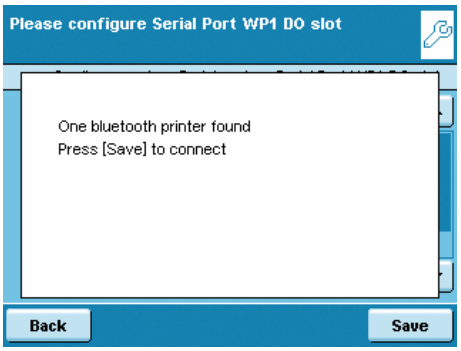


- ▷ A message will appear to confirm whether the printer has been found.
- ▶ To save settings, touch **Save**.
- ▶ Saving settings: Touch 2× on **Back**.
- ▷ The connection will initially be terminated after saving. The LED on the printer will continue to flash blue/red.
- ▷ As soon as the configuration menu is exited, the connection will be re-established. The LED on the printer will then illuminate permanently (blue).

# Network Interface (Ethernet)

Purpose This interface lets you integrate your balance into a TCP/IP-based network.

Requirements The person configuring the Ethernet interface should have basic knowledge of TCP/IP-base networks and network technologies in general.
The Ethernet interface is connected to the local network via the RJ45 slot.

Features

| | |
|---|---|
| Transfer rate: | 10 Mbs/sec (10BASE-T, Ethernet) and 100 Mbs/sec (100BASE-TX, Fast Ethernet), auto-recognition (10/100, HalfDX/FullDX) |
| Connection type: | Network protocol: ModBus/TCP |
| Transport: | TCP/IP or UDP/IP |
| HMS certificates: | Compatible with ModBus TCP standard of the ModBus Organisation, industry-compatible CE, UL, cUL |
| Cable: | Twisted pair, shielded, CAT-5 or higher, 1:1, UTP / STP, male connector RJ45; e.g., patch cable CAT5 depending on application (straight/crossover) |
| Cable impedance: | 150 Ohm |
| Cable length to HUB: | Max. 30 m |

## Connecting Network Cables

The slot for the network port is located at the back of the control unit.

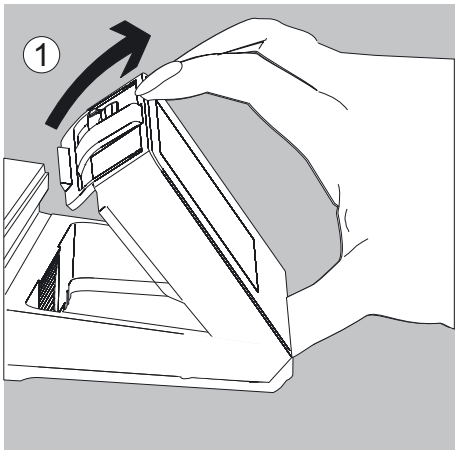


▶ Tilt the control unit (1) until it is nearly vertical.

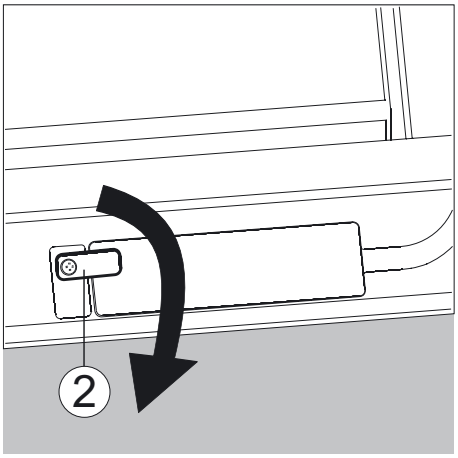


On the bottom panel of the display unit:

▶ Turn the locking lever (2) 90°.

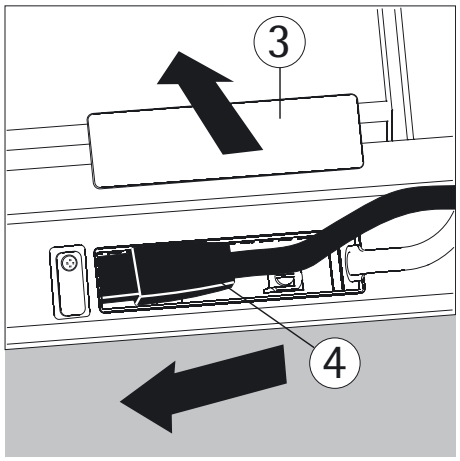


- Remove the cover plate (3).
- Insert the Ethernet cable plug (4) so that it clicks audibly into place.

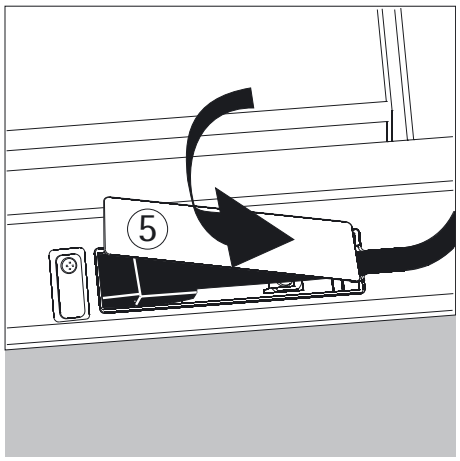


- Reattach the cover plate (5).
- Turn the locking lever back to its locked position.

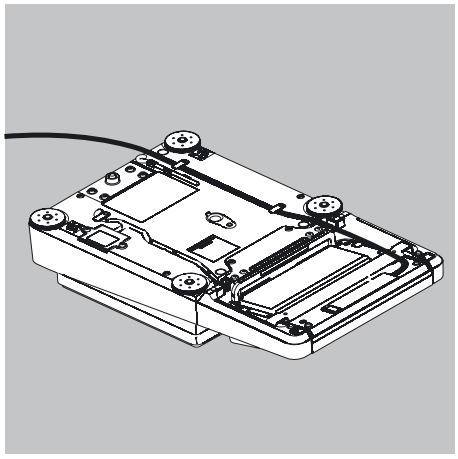

⚠ Exercise caution to avoid glass breakage for models with a draft shield.

- Turn over the balance and place it on a soft surface.
- Lay the Ethernet cable (6) through the cable channel of the weighing module.

## Configuring Network Operation (Ethernet)

Preparation: Before you can start with the configuration, you will require some information about your network. Please contact your network administrator. The important question is whether your network supports DHCP or not.

DHCP: With DHCP, you can automatically link a (new) balance to an existing network without having to configure it manually. Normally, the balance (client) only requires the automatic acquisition setting for IP address (factory setting).

DHCP is supported: In this case, no additional information is required.

DHCP is not supported: In this case, you need the following information from the network administrator:

- IP address
- Subnet mask
- Default gateway address

  Device name (host name): This name can be changed if required.
  This name is used to select the balance in the network.

### Select Network Settings (Fixed Setting)

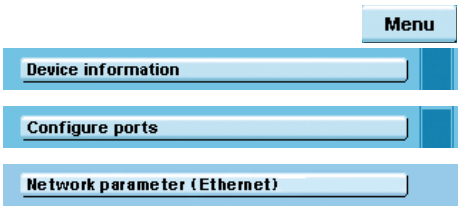


▶ If appropriate, toggle to the System Settings menu.
▶ Select the **Device information** submenu and slide the right scroll bar down.
▶ Select **Configure ports**.
▶ Open the **Network parameter (Ethernet)** submenu.

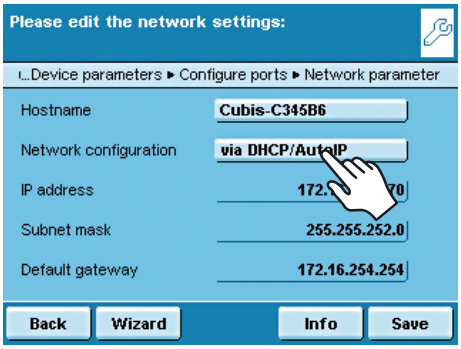


▶ To change the IP settings, touch the input field behind **Network configuration** input field.

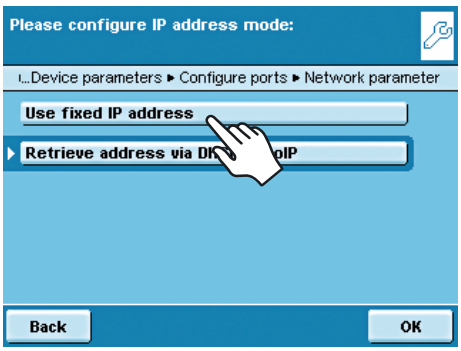


▶ Select **Use fixed IP address** and confirm with **OK**.

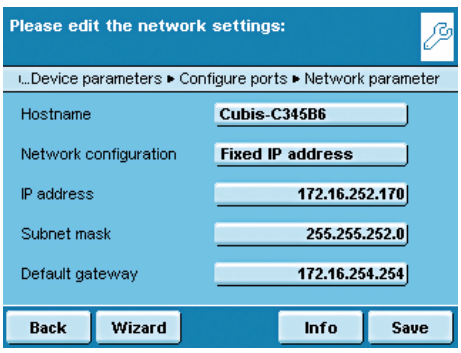


▶ In the overview, check all settings and change as required.

**Host name** (device name): You can select this name freely.
This name is used to select the balance in the network.

▶ If you then want to produce an Ethernet connection, write down the IP address now.

▶ To save the network configuration, touch **Save**.
▷ The Configure ports submenu is displayed.

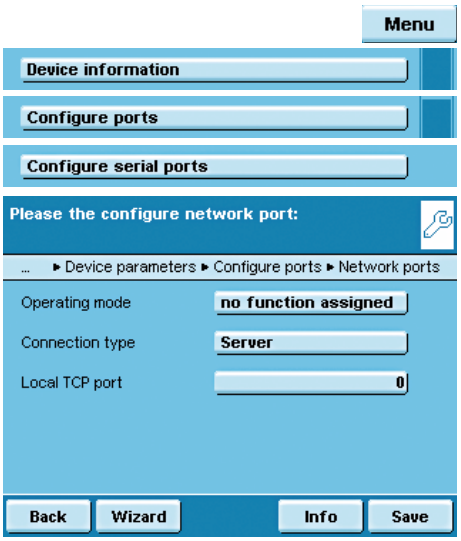


### Configuring Network Interface (Com D)

▶ If appropriate, toggle to the System Settings menu.
▶ Select the **Device information** submenu and slide the right scroll bar down.
▶ Select **Configure ports**.
▶ Open the **Network ports** submenu.

▶ Define the operating mode and, depending on the connection type, either Server port and address or the local TCP port.

Operating mode: **No function/XBPI/SBI/Printer output/SICS protocol**
Connection type (of the balance): **Server/Client**

▶ To save settings, touch **Save**.

**Examples:**
For the connection type **Balance = Server** you only need to enter the local TCP port (e.g., for working with the Sartorius **SartoCollect** software for data communication).
For the connection type **Balance = Client**, you have to enter the server TCP port and the server IP address (e.g., for working with **"Virtual serial port emulator"** as the server for all previous serial PC applications with the balance or for printing on a network printer server).

## Remote Control of the Balance from a PC via Ethernet

### System Requirements

– PC with internet browser
– Operating system Windows, Mac OS, Linux, Unix or Solaris.

### Installation

▶ Connect the balance to your network via the Ethernet interface.
▶ Enter the IP address of the balance in the address field of your Windows browser. The IP address of your balance is listed under Menu/Device Information/Basic data.

### Port Release

– If you are having problems with the connection, you must configure your firewall to release the right TCP/IP UDP port.
– If you are using a router and want to access your computer on the internet via your IP address, the port must also be set in the router's virtual server settings. This means that you must forward the port to the IP address of the server.
– If you still have problems, you may have to deactivate your firewall temporarily while using a browser connection.

**Selecting Functions**

▶ Click on the desired function in the browser.
▶ To exit a function, click on >>Back or on the back key of your browser.

**Remote configuration (VNC)**: Use this function for remote control of the balance. The display screen on the balance is reproduced in the browser, you can operate the balance now by using the mouse and keyboard of your PC.
**Software version:** You can view the version of the balance, control unit and application software.
**Screenshot**: You can print the current screen or save it as GIF file.
**Browse alibi memory**: You can view the alibi memory.
**Show settings**: You can view the following settings:
- Task profiles
- User profiles
- System settings (menu)
- Service information (service)
- Interface information (ports)
- Timer-controlled actions

**Show log files**: You can view respective log files.

**Viewing a Print File Directly in an Internet Browser:**

Prerequisites:
The configuration settings can be found in the chapter System Settings (Menu): “Print to File.” Select the following file format for viewing directly in an Internet browser: Print to TXT file.

▶ In the browser, click on “Show Log Files” and then “Print to File.”
▶ To view the printout directly in the internet browser, click on “print.txt.”

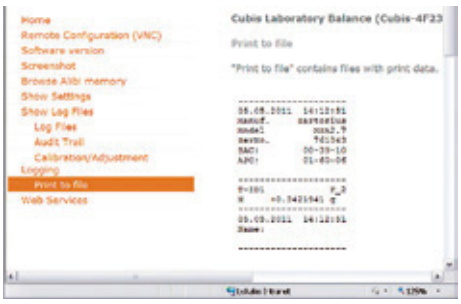


▷ The printout is displayed in the Internet browser.

# Data Output

You can define the data output parameter so that output is activated either when a print command is received or automatically synchronized with the display or at defined intervals (see application programs and autoprint settings).

Data Output by Print Command

The print command can be transmitted by pressing ( 🖹 ) or by a software command (Esc P).

Automatic Data Output

In the **Autoprint** mode, data is output to the data interface port without an extra print command. You can have synchronized data output automatically at defined display update intervals, with or without the stability parameter. The interval time depends on the balance operating status and balance type.
If the automatic data output is activated in the Device Configuration, it starts immediately after the balance is turned on. You can also configure whether the automatic data output can be stopped and started by pressing the ( 🖹 ) key.

## Data Output Formats

You can output the value displayed in the measured value line and the weight unit, with or without a data ID code. Configure this output parameter in the Device Configuration menu (Menu/Device Configuration/Configure data output/ Line format).

Example: Output Without an ID Code `+ 253 pcs` 16 characters are output

Example: Output Without an ID Code `Qnt + 253 pcs` 22 characters are output

**Data Output Format with 16 Characters**
Display segments that are not activated are output as spaces.
Display values without a decimal point are output without a decimal point.
The type of character that can be output depends on the character's position.

**Normal Operation**

| Position | 1 | 2 | 3 | 4 | 5 | 6 | 7 | 8 | 9 | 10 | 11 | 12 | 13 | 14 | 15 | 16 |
|---|---|---|---|---|---|---|---|---|---|---|---|---|---|---|---|---|
| | + | A | A | A | A | A | A | A | A | A | * | E | E | E | CR | LF |
| or | – | . | . | . | . | . | . | . | . | . | . | * | * | * | | |
| or | | * | * | * | * | * | * | * | * | * | * | | | | | |

*: Spaces
A: Displayed characters
E: Characters for the unit, or "!" as a warning symbol for calculated values
CR: Carriage return
LF: Line feed

**Special Outputs**

| Position | 1 | 2 | 3 | 4 | 5 | 6 | 7 | 8 | 9 | 10 | 11 | 12 | 13 | 14 | 15 | 16 |
|---|---|---|---|---|---|---|---|---|---|---|---|---|---|---|---|---|
| | * | * | * | * | * | * | – | – | * | * | * | * | * | * | CR | LF |
| or* | | * | * | * | * | * | A | * | * | * | * | * | * | * | CR | LF |
| or* | | * | * | * | * | * | A | B | * | * | * | * | * | * | CR | LF |
| and only upon request with ESC w0 (no print command): | | | | | | | | | | | | | | | | |
| | | * | * | * | * | * | W | * | X | X | X | Y | Y | Y | CR | LF |
| or* | | * | * | * | * | * | I | * | X | X | X | * | * | * | CR | LF |

| | | | |
|---|---|---|---|
| *: | Spaces | A = C: | Adjustment |
| AB = – –: | Final readout | W: | Draft shield status (optional): |
| A = H: | Overload | I: | Ionizer (optional) |
| AB = H H: | Overload in checkweighing | Y,Y,Y = | Draft shield doors |
| A = L: | Underweight | XXX = | Decimal value calculated from binary data |
| AB = L L: | Underweight in checkweighing | | |

| Decimal value | Binary value | Control information |
|---|---|---|
| 1 | Bit0 = 0: | No error/ionizer off |
| | Bit0 = 1: | Draft shield error/ionizer on |
| 2 | Bit1 = 0: | Draft shield motors off |
| | Bit1 = 1: | Draft shield in motion |
| 8 | Bit3 = 0: | Learning function off |
| | Bit3 = 1: | Learning function on |
| 16 | Bit4 = 0: | At least one draft shield door open |
| | Bit4 = 1: | All draft shield doors closed |
| 32 | Bit6 = 0: | Motorized draft shield operation |
| | Bit6 = 1: | Manual draft shield operation |

R,M,L = COO: **R**ight door closed (**C**losed), **M**iddle and **L**eft doors open (**O**pen)
R,M,L = OCC: **R**ight door open (**O**pen), **M**middle and **L**eft doors closed (**C**losed)

**Error Message**

| Position | 1 | 2 | 3 | 4 | 5 | 6 | 7 | 8 | 9 | 10 | 11 | 12 | 13 | 14 | 15 | 16 |
|---|---|---|---|---|---|---|---|---|---|---|---|---|---|---|---|---|
| | * | * | * | E | r | r | * | */# | # | # | * | * | * | * | CR | LF |

*: Spaces # # #: Error code number

Example: Output of the weight value + 111.255 g

| Position | 1 | 2 | 3 | 4 | 5 | 6 | 7 | 8 | 9 | 10 | 11 | 12 | 13 | 14 | 15 | 16 |
|---|---|---|---|---|---|---|---|---|---|---|---|---|---|---|---|---|
| | * | * | * | 1 | 1 | 1 | . | 2 | 5 | 5 | * | g | * | * | CR | LF |

| | |
|---|---|
| Position 1: | Plus +, or minus – or space |
| Position 2: | Space or weight value |
| Position 3 – 10: | Weight value with decimal point, leading zeros are output as spaces. |
| Position 11: | Spaces |
| Position 12 – 14: | Characters for unit of measure or space |
| Position 15: | Carriage return |
| Position 16: | Line feed |

## Data Output Format with 22 Characters

When data is output in this format, ID codes with 6 characters will precede data with a 16-character format. These six characters identify the subsequent value.

**Normal Operation**

| 1 | 2 | 3 | 4 | 5 | 6 | 7 | 8 | 9 | 10 | 11 | 12 | 13 | 14 | 15 | 16 | 17 | 18 | 19 | 20 | 21 | 22 |
|---|---|---|---|---|---|---|---|---|---|---|---|---|---|---|---|---|---|---|---|---|---|
| K | K | K | K | K | K | + | A | A | A | A | A | A | A | A | A | * | E | E | E | CR | LF |
| * | * | * | * | * | * | – | . | . | . | . | . | . | . | . | . | * | * | * | * | | |
| | | | | | | * | * | * | * | * | * | * | * | * | * | | | | | | |

K: ID code character[1])
*: Spaces
A: Displayed characters
LF: Line feed

E: Unit symbol character[1])
See chapter “Mass Unit Conversion” or “!” as a warning symbol for calculated values
CR: Carriage return

**Special Outputs**

| 1 | 2 | 3 | 4 | 5 | 6 | 7 | 8 | 9 | 10 | 11 | 12 | 13 | 14 | 15 | 16 | 17 | 18 | 19 | 20 | 21 | 22 |
|---|---|---|---|---|---|---|---|---|---|---|---|---|---|---|---|---|---|---|---|---|---|
| S | t | a | t | * | * | * | * | * | * | * | * | – | – | * | * | * | * | * | * | CR | LF |
| | | | | | | | | | | | | H | H | | | | | | | | |
| | | | | | | | | | | | | L | L | | | | | | | | |
| | | | | | | | | | | | | C | | | | | | | | | |

*: Spaces
– –: Final readout
H: Overload
H H: Overload in checkweighing

L: Underweight
L L: Underweight in checkweighing
C: Adjustment
Draft shield and ionizer status similar to data output format with 16 characters

**Error Message**

| 1 | 2 | 3 | 4 | 5 | 6 | 7 | 8 | 9 | 10 | 11 | 12 | 13 | 14 | 15 | 16 | 17 | 18 | 19 | 20 | 21 | 22 |
|---|---|---|---|---|---|---|---|---|---|---|---|---|---|---|---|---|---|---|---|---|---|
| S | t | a | t | * | * | * | * | * | E | r | r | * | # | # | # | * | * | * | * | CR | LF |

*: Spaces # # #: Error code number

**ID Code for the Character K**

The ID code depends on the model, e.g., not all units and IDs are available for verified balances

**Device Information, Basic Data**

| | |
|---|---|
| Manuf. | Manufacturer |
| Model | Model |
| SerNo. | Serial number |
| BAC: | Balance version |
| APC: | Display version |

**Print function**

| | |
|---|---|
| Name | Name |

**Task profiles**

| | |
|---|---|
| Task | Task title |
| TskDes | Task description |

**User profiles**

| | |
|---|---|
| User | User title |
| UsrDes | User description |

**Data Memory**

| | |
|---|---|
| MemNo. | Memory number |
| MemID | Memory ID |

**Basic Weighing**

| | |
|---|---|
| G# | Gross weight 2 |
| N | Net weight |
| N1 | Net weight (T1·0) |
| T | Tare weight |
| T1 | Tare weight 1 |
| T2 | Tare weight 2 |

**Calibration/Adjustment**

| | |
|---|---|
| Set | Target weight |
| Stat | Status |
| Dev | Deviation weight |
| s = | Result ReproTEST |

**Leveling**

| | |
|---|---|
| LevRes | Leveling result |

**SQmin Function**

| | |
|---|---|
| SQmin | Minimum weight |

**Individual Identifiers**

| | |
|---|---|
| P-ID1 | Print ID1 |
| T-ID1 | Task start ID1 |
| I-ID1 | Initialization ID1 |
| R-ID1 | Result output ID1 |
| C-ID1 | Component ID1 |
| E-ID1 | Evaluation ID1 |
| X-ID1 | Task end ID1 |

**Density Determination**

| | |
|---|---|
| ID-Dk | Name of density determination kit |
| n | No. of wires |
| d | Wire diameter |
| D | Vessel diameter |
| Id-Liq | Name of liquid |
| RefFl | Density of liquid |
| b | Coefficient of expansion of the liquid |
| LA | Correction for air density |
| Pl.vol | Volume of glass plummet |
| Temp | Temperature of liquid |
| RhoFl | Density of liquid |
| Corr | Correction factor of the density determination kit |
| Wa | Weight of sample in air |
| Wfl | Weight of sample in liquid or weight of liquid |
| Wt | Residual liquid |
| Wr | Sample plus weight of liquid |
| Rho | Density of sample |
| Vol | Volume of sample |

**Statistics**

| | |
|---|---|
| nDef | Default number of items |
| n | Transaction counter |
| x | Average value of the weight values |
| s | Standard deviation of the weight values |
| sRel | Variation coefficient of the weight values |
| Sum | Total of all weight values |
| Max | Highest weight value |
| Min | Lowest weight value |
| Dif | Difference between highest and lowest weight value |

**ID Code for the Character K**
(Continued)

**Calculation**

| | |
|---|---|
| Form | Formula |
| Res | Results using equations |
| X | Variable X |
| Y | Variable Y |
| a | Variable a |
| b | Variable b |

**Animal Weighing**

| | |
|---|---|
| mDef | Target value |
| Mul | Calculation factor |
| mAct | Actual number |
| x-Net | Results |
| x-Res | Calculated result |

**Formulation**

| | |
|---|---|
| IDCm1 | Id Component 1 |
| TCmp1 | Reference weight Comp. 1 |
| PCmp1 | Reference percentage weight Comp. 1 |
| Comp1 | Weight value Comp.1 |
| WD1 | Difference Weight 1 |
| PD1 | Difference Percent 1 |
| WghMod | Mode for inputting initial weight |
| nDef | Default number of components |
| Total | Total of weight values |
| RSum | Total reference |
| n | Transaction counter |
| IniWgt | Default total weight |

**Weighing in Percent**

| | |
|---|---|
| pRef | Percentage of reference |
| Wxx% | Reference percentage weight |
| Prc | Percent |
| D | Percent loss |
| DR | Ratio in percent 1 |
| OR | Ratio in percent 2 |

**Timer-controlled Functions**

| | |
|---|---|
| InvTim | Interval |
| FixTim | Fixed point in time |
| ResTim | Remaining time |
| Hold | Display blocked |

**Totalizing**

| | |
|---|---|
| nDef | Default number of items |
| Comp | Weight value start |
| Comp | Current weight value |
| n | Number of the item |
| CompC | Weight value start: calculated components |
| CompC | Current weight value: calculated components |
| Sum | Total of all weight values |

**DKD Measurement Uncertainty**

| | |
|---|---|
| a1 | Addend a1 |
| b1 | Factor b1 |
| b1 e- | Exponent b1 |
| a2 | Addend a2 |
| b2 | Factor b2 |
| b2 e- | Exponent b2 |
| P fact | Pa Factor |
| U | Absolute inaccuracy of the process |
| U* | Relative inaccuracy of the process |
| PA | Inaccuracy of the process |

**Parts Counting**

| | |
|---|---|
| wRef | Reference piece weight |
| nRef | Reference sample quantity |
| Qnt | Piece count |

**Checkweighing**

| | |
|---|---|
| Setp | Target value |
| Min | Min. tolerance for checkw. |
| Max | Upper tolerance for checkw. |
| Lim- | Lower percentage |
| Lim+ | Upper percentage |
| Count | Counter for correct values |
| CountLL | Counter for too small values |
| CountHH | Counter for too large values |
| Diff | Check result measure |

**Motorized Draft Shield**

| | |
|---|---|
| WPC | Draft shield version |
| Stat | Draft shield status |

**Ionizer**

| | |
|---|---|
| Stat | Ionizer status |

# Data Input

## SBI Commands (Data Input Format)

The computer connected via the data port can send commands to the balance to control balance and application program functions.
These control commands may have different formats and contain up to 26 characters. Each of these characters must be sent based on the setup configuration for data transmission.

**Formats for Control Commands**

| | | | | | | | | | | |
|---|---|---|---|---|---|---|---|---|---|---|
| Format 1: | Esc | ! | CR | LF | | | | | | |
| Format 2: | Esc | ! | # | _ | CR | LF | | | | |
| Format 3: | Esc | ! | # | &t | (max. 20 &t) | | &t | _ | CR | LF |

Esc: Escape
!: Command character
#: Number
&t: Number or letter
_: Underline (ASCII: 95)
CR: Carriage return (optional)
LF: Line feed (optional)
max: Depends on command character (parameters): The entry is truncated after the max. length, and not rejected as when entered via the keyboard.

**Examples**:
Format 1: Esc P
Format 2: Esc x1_
Format 3: Esc t Article1_
Format 4: Esc e!{MESSAGE.SHOW_ERROR “Weight too low!}
Esc e?{WEIGH.WGT_NET}_[1])
(e.g., query net weight value)
Esc ea{Art.413}_[1])
(determine weight and tare values and save to the alibi memory together with the label)

## Overview of SBI Commands

| Format | Command | Action/Function | | Comments |
|---|---|---|---|---|
| 1 | ESC P | Print to the interface where the prompt originated | | Corresp. to Menu, with/without stability |
| 1 | ESC T | “TARE“ key taring or zeroing | | |
| 1 | ESC K | Filter “Very stable conditions” | | |
| 1 | ESC L | Filter “Stable conditions” | | |
| 1 | ESC M | Filter “Unstable conditions” | | |
| 1 | ESC N | Filter “Very unstable conditions” | | |
| 1 | ESC O | Block keys | | |
| 1 | ESC Q | Acoustic signal | | |
| 1 | ESC R | Unblock keys | | |
| 1 | ESC S | Restart | | |
| 1 | ESC Z | Internal calibration/adjustment | | Depending on menu, 1/2 step increments |
| 1 | ESC U | Tare | | |
| 1 | ESC V | Zero key | | |
| 1 | ESC W | Ext. adjustment with default weight | | Depending on menu, 1/2 step increments |
| 2 | ESC f3_ | Zero | | |
| 2 | ESC f4_ | Tare only | | |
| 2 | ESC f5_ | Left draft shield key (closing and opening as learned or default) | | Only if available |
| 2 | ESC f6_ | Right draft shield key (closing and opening as learned or default) | | Only if available |
| 2 | ESC kF1_ | Soft key 1, first from right | | Depends on application |
| 2 | ESC kF2_ | Soft key 2, second from right | | Depends on application |
| 2 | ESC kF3_ | Soft key 3, third from right | | Depends on application |
| 2 | ESC kF4_ | Soft key 4, fourth from right | | Depends on application |
| 2 | ESC kF5_ | Soft key 5, fifth from right | | Depends on application |
| 2 | ESC kF7_ | “Menu” soft key | | |
| 2 | ESC kF9_ | “TASK” key | | |
| 2 | ESC kF10_ | “USER” key | | |
| 2 | ESC kP_ | Print as with “PRINT” key (e.g., to several interfaces) | | |
| 2 | ESC m0_ | Ionizer status | | Only if available |
| 2 | ESC m1_ | Ionizer on, with preset time | | Only if available |
| 2 | ESC m2_ | Ionizer off | | Only if available |
| 2 | ESC s3_ | Back, exit, cancel | | |
| | | **Models with the analytical draft shield** | **Models with the rotational draft shield** | **Analytical and rotational draft shield** |
| 2 | ESC w0_ | Draft shield status | Draft shield status | Only if available |
| 2 | ESC w1_ | Open left door | Open draft shield 100% to the left | Only if available |
| 2 | ESC w2_ | Close all doors | Close draft shield | Only if available |
| 2 | ESC w3_ | Open upper door | Open draft shield up to position saved | Only if available |
| 2 | ESC w4_ | Open right door | Open draft shield door 100% to the right | Only if available |
| 2 | ESC w5_ | Open left and upper doors | – | Only if available |
| 2 | ESC w6_ | Open left and right doors | – | Only if available |
| 2 | ESC w7_ | Open right and upper door | – | Only if available |
| 2 | ESC w8_ | Open all doors | – | Only if available |
| 2 | ESC x0_ | Perform internal calibration | | |
| 2 | ESC x1_ | Print weigher type | | |
| 2 | ESC x2_ | Print serial number | | |
| 2 | ESC x3_ | Print balance software version | | |
| 2 | ESC x4_ | Print softw. version of display and control unit | | |
| 2 | ESC x5_ | Print user/device ID | | |
| 2 | ESC x6_ | Print cal./adjust. weight ID | | |
| 2 | ESC x7_ | Print measurement sequence ID | | |
| 3 | ESC txxx_ | Input text | | |
| 3 | ESC txxx_ESC f5_ | Enter opening angle xxx in degrees for left key | | |
| 3 | ESC txxx_ESC f6_ | Enter opening angle xxx in degrees for right key | | |
| 3 | ESC z5xxx_ | Input user/device ID | | |
| 3 | ESC z6xxx_ | Input cal./adjust. weight ID | | |
| 3 | ESC z7xxx_ | Input measurement sequence ID | | |
| 4 | ESC e! {xxx}_ | Execute application command, {xxx} = Task ID | | |
| 4 | ESC e? {xxx}_ | Query parameter, {xxx} = Parameter ID | | |
| 4 | ESC ea {xxx}_ | Save weight value to alibi memory (with optional label), {x...x} = Memory ID | | |

## SICS Commands

The computer connected via the data port can send control commands to the balance to control balance and application program functions.
Please consult the separate SICS documentation for a description of the syntax.

[1]) Marked commands can also be mini-SICS commands.

| Command | Action/Function |
|---|---|
| | **Level 0 Version 2.3x** |
| @ | Reset all SICS commands |
| I0 | List all available commands |
| I1 | Send information about the level and its versions |
| I2 | Balance model prompt |
| I3 | Prompt for input of software version of balance (BAC) |
| I4 | Prompt for balance serial number |
| I5 | Prompt for software version of display (APC) |
| S | Send weight value at stability |
| SI | Send weight value without stability |
| SIR | Send automatic weight values at and without stability |
| Z | Zero the balance at stability |
| ZI | Zero the balance without stability |
| | **Level 1 Version 2.2x** |
| T | Tare the balance at stability |
| TI | Tare the balance without stability |
| D | Write text in display |
| DW | Delete text from display |
| K | Key control |
| TA | Prompt for and allocate tare memory |
| TAC | Delete tare memory |
| SR | Send weight value if weight changes |
| | **Level 2** |
| M13 | Activate/deactivate touch screen softkeys |
| PWR | Turn balance on/off (standby) |
| SU | Send weight value at stability with current weight unit (with motorized draft shield) |
| WS | Query door position of motorized draft shield / Open or close door |
| M07 | Query / Activate / Deactivate automatic draft shield |
| M24 | “Print” key query / deactivate / print the stable or unstable weight values |
| SU | Send weight value at stability with current weight unit (with motorized draft shield) |
| WS | Query door position of motorized draft shield / Open or close doors |
| PWR | Turn balance on/off (standby) |
| I10 | Query/set the balance ID |
| I11 | Query balance type |
| I14 | Query balance components |
| M01 | Query/set application filter |
| M02 | Query/set filter adjustment |
| M03 | Query/set automatic zeroing |
| M04 | Query/set I/O inputs |
| M07 | Query/activate/deactivate automatic draft shield |
| M12 | Acoustic signal (beep) |
| M13 | Activate/deactivate touch screen softkeys |
| M21 | Query/set unit of weight |
| M24 | Query/deactivate “Print” key / Print the stable or unstable weight values |
| M39 | Query/activate bar graph display in working environment |
| P100 | Send text line to printer |
| C1 | Execute calibration/adjustment (as set in menu) |

**Remote Control (Remote)**

| | |
|---|---|
| P112 | Write text in selected line on display |
| P113 | Delete text from selected line on display |
| P114 | Overwrite task or user names |
| P120 | Turn off bar graph in checkweigher |
| P121 | Turn on bar graph in checkweigher |
| RM20 | Activate/deactivate user input |
| RM30 | Assign new function to softkeys |
| RM32 | Assign new order to softkeys |
| RM34 | Create a dynamic parameter |
| RM35 | Immediately change softkey designations |
| RM36 | Assign/query function of multiple softkey lines |
| RM37 | Prepare preset softkey designations for display |
| RM38 | Activate RM36-assigned softkey lines |
| RM39 | Activate/deactivate RM30-assigned softkey functions |
| RM44 | Query/set input with barcode scanner |
| RM48 | Change order of standard keys |
| RM49 | Activate/deactivate message |
| RM51 | Activate/deactivate selection window |
| RM52 | Define properties for a window with info text |
| RM53 | Activate/deactivate window with info text |
| RM54 | Activate/deactivate window with info |

**Additional Sartorius Commands**

| | |
|---|---|
| SA | Send weight value at stability and store in alibi memory (with optional label) |
| CMD | Execute application command |
| PAR | Query parameter |
| MN36 | Assign a description to several menus |
| MN38 | Activate/deactivate MN36-assigned menus |
| TX36 | Assign texts to several text pages |
| TX37 | Overwrite a line of a text page |
| TX38 | Activate/deactivate TX36-assigned text pages |

# Updating the Software

Purpose: To better serve our customers, Sartorius continues to improve its balance software. Sartorius makes the latest software versions available online so that you can quickly and easily remain up-to-date. Sartorius, however, makes no guarantee regarding the use of this software.
The software should only be updated by an administrator.

M On verified balances, observe the audit trail instructions under (3) Uploading the Software Update to the Balance.

⚠ Before updating the software, save all data (see chapter **Exporting Data**).

ⓘ If you are working with User Management (user profiles are defined), the software can only be updated by the administrator.

## 1) Download the software update from the Internet

The first step is to download the software to your computer:

- ▶ In your browser, go to website "**www.sartorius.com/downloads**" and click on the "Software" link.
- ▶ Select the update packet for your balance.
- ▶ Enter the information required for registration.
- ▶ Download the software packet to your computer.
- ▶ Unpack the zip file.
- ▶ Copy the software update to a SD card (32 × 24 × 2.1 mm).

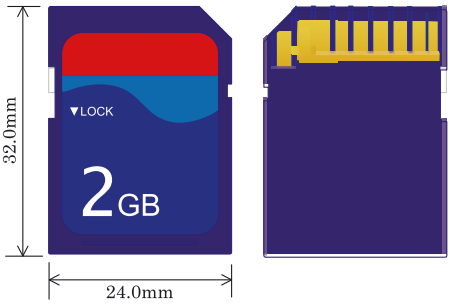


## 2) Insert the memory card into the control unit

The slot for the SD card is located at the back of the control unit.

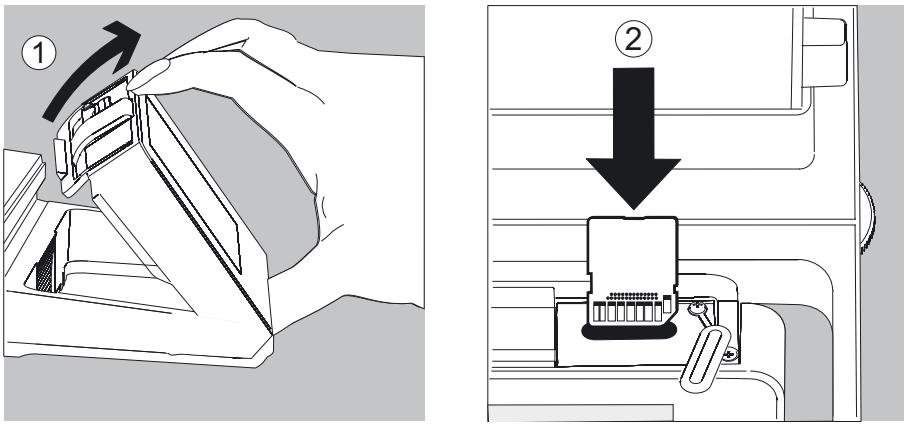


1. Tilt the display and control unit.
2. Swivel the cover of the card slot to the front.
   Align the SD card so that the contacts are facing forward.
3. Insert the card into the slot as far as it will go.

- ▶ To remove the card, press it against the resistance in the direction of the slot so that the card springs out.

## 3) Upload the software update to the balance

▶ If you are working with User Management, it is necessary to log on as administrator.

▶ Toggle to the System Settings menu.

▶ Open the **Update software** submenu.

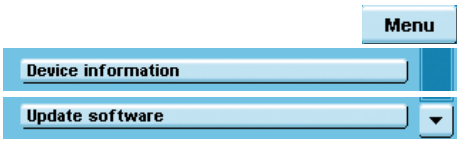


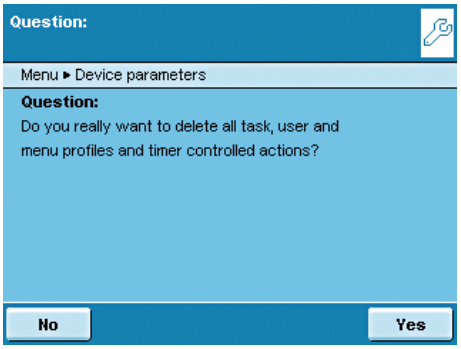


▷ You are asked if you want to delete the existing profiles.

▶ Touch **No** or **Yes**.

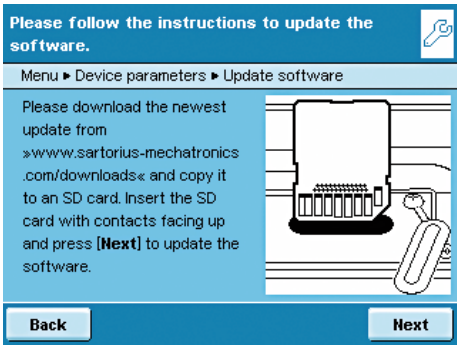


▶ Once the SD card with the current software is inserted, touch **Next**.

If the following error message appears:

**Wrong XML version. Please check the data.**

▶ Touch **Next**.

▷ All previous data will be saved in the new format.

▶ After updating your software, check your settings (Menu, TASK and USER).

▶ If the XML files continue to cause problems, contact your local Sartorius service center.

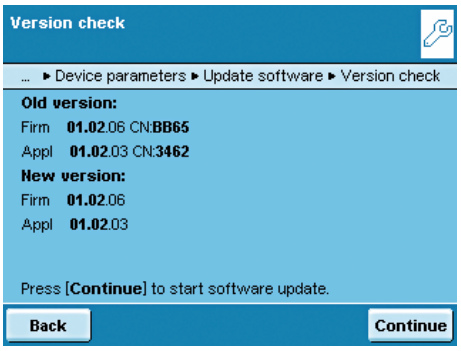


▷ After a version check is run, the versions of the current and the new software are displayed.

▶ To start the update, press **Continue**.

▷ An acoustical signal will sound when the update is complete and the balance then carries out a self test.

## Audit Trail for Software Download on Models Verified for Legal Metrology

### Software Status of the Balance

M

Models verified for use in legal metrology are assigned an authorized software status when the balance is shipped for delivery. This can be indicated in the display. If something concerning the software or the legal regulations changes, the software status must be updated.

### Display Audit Trail of the Balance Software

▶ Turn off the balance and disconnect it from the power supply.

▶ Keep ( ⏻ ) pressed and reconnect the balance back to the power supply.

▷ The “Bios” menu is displayed.

▶ Press the “Settings” menu item.

▶ Select the “Audit trail of software updates” menu item.

▶ Select “Show audit trail.”

▷ The Audit Trail with modification date, name, new and old software and version number are indicated in the display.

# Error and Status Messages

Error messages appear directly in the respective active application, usually with a descriptive text on how to correct it. Warning and reminder functions are displayed with a fixed 3-level action hierarchy:

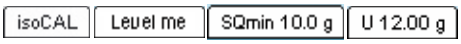


## Status display (tab).

The available status displays and their meanings are described in the "User interface" section.

## Warning text with a repeating reminder

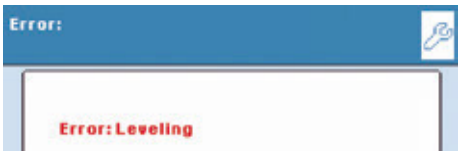


## Error text with mandatory prompt for troubleshooting

You cannot proceed until you have eliminated the error.

## Ineffective key commands or entries

If you press a key that has no function or not allowed, this error is indicated as follows:

- A double beep indicates that the key has no function assigned to it.
- An error message indicates invalid input.
- An error code or error message indicates incorrect operation.

Error messages are shown on the display for 2 seconds or must be acknowledged by pressing a key. The error text provides direct suggestions on how to proceed. If the error cannot be resolved by following the suggestions, please contact Sartorius customer service.

# GPL License

Devices of the Cubis series also contain “free software” in the firmware that is licensed under the GNU General Public License (GPL) Version 2, June 1991 and the GNU Lesser General Public License (LGPL) Version 2.1, February 1999. This third-party developed “free software” is copyrighted and is provided free of charge.

The licensing conditions of the Free Software Foundation, Inc. are available in English on the included CD-ROM.

You can purchase the GPL source text from Sartorius on CD under the VF no. 4043 for a shipping cost of €-20.

# Care and Maintenance

**Service**
Regular servicing by a Sartorius technician will extend the service life of your balance and ensure its continued weighing accuracy. Sartorius offers its customers service contracts with regular maintenance intervals ranging from 1 month to 2 years.
The frequency of the maintenance intervals depends on the operating conditions and user's tolerance requirements.

## Repairs

Repair work must only be performed by trained service technicians. Repairs performed by untrained persons may result in considerable hazards for the user.

The device should be unplugged during repair work.
Unplug the power cord from the outlet.
Repair work must only be performed by Sartorius-trained service technicians.
As needed: Please contact your Sartorius dealer!

## Cleaning the Balance

Ensure that no dust or liquid enters the balance weighing system.

Do not use aggressive cleaning agents (solvents or similar agents).

Disconnect from the voltage supply: Unplug the power cord from the wall outlet and unplug any data cables connected to the balance.

**Models with a Readability of ≥10 mg:**
- These models meet the requirements of protection class IP54. The IP protection only applies to the balance housing and not to the AC adapter.
- The IP protection is only guaranteed when the weighing pan is mounted.
- Retain the cover cap for the data output. When the data output is not in use, reapply the cover cap to protect it against vapors, moisture, and dust or dirt.

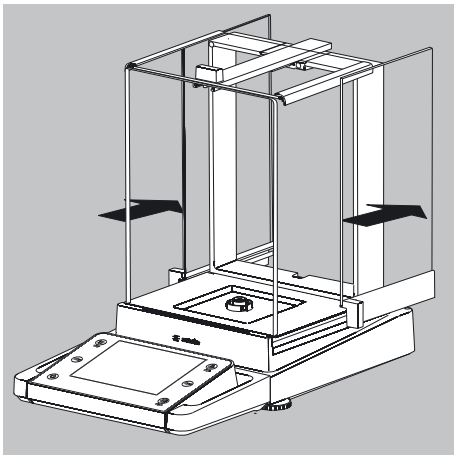

▶ Open the panels of the analytical draft shield completely.

▶ Clean the housing and interior of the balance with a cloth lightly moistened with a soap solution.

▶ Dry all parts with a soft, dry cloth or use blotting paper to absorb dampness. Then replace all dried parts.

▶ Remove panels from the analytical draft shield and clean them with commercially available glass cleaner. Dry the panels and then reinstall them in the balance.

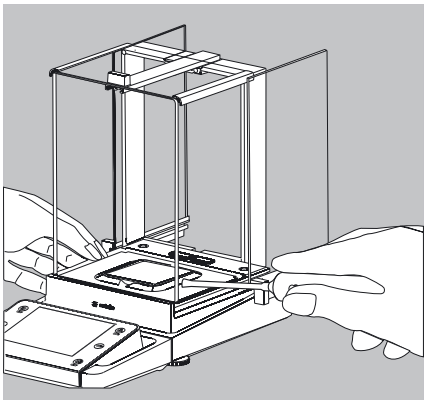

▶ Carefully remove any sample residue/spilled powder using a brush or hand-held vacuum.

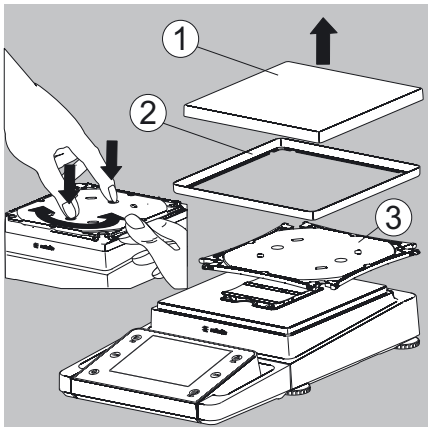


▶ If necessary, remove the weighing pan, shield plate and pan support.

**1)** Weighing pan

**2)** Shield plate/draft shield

**3)** Pan support

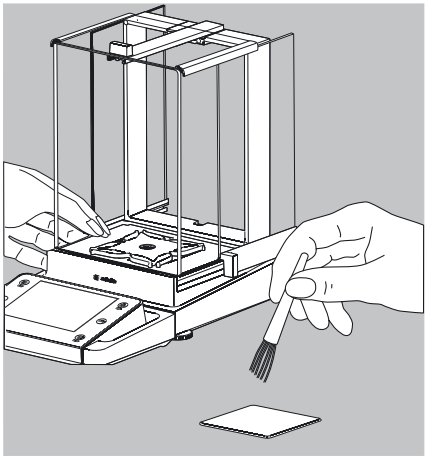

▶ Clean parts with a cloth or brush.

Then replace the parts.

## Cleaning Stainless Steel Surfaces

All stainless steel parts should be cleaned at regular intervals.

Use a damp cloth or sponge to clean stainless steel parts on the balance.
Only use conventional household cleaning agents which are suitable for stainless steel (e.g., Stahlfix). After this, let the device dry.
For additional protection, protective oil may be applied.

Remove the stainless steel weighing pan and thoroughly clean it separately.
Only use solvents for cleaning stainless steel parts.
The stainless steel weighing pan should be cleaned simply by rubbing. After this, rinse the equipment thoroughly until all residue is removed.
No protective oil should be applied to the stainless steel weighing pan!

## Safety Inspection

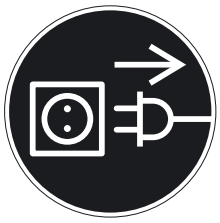

If there is any indication that safe operation of the balance is no longer warranted:

▶ Disconnect from the supply voltage: Unplug the power cord from the outlet.

▶ Secure the AC adapter and cord so that they cannot be used.

Safe operation of the mass comparator with the AC adapter is no longer ensured when:

- The AC adapter or the mains connecting lead shows visible damage.
- The AC adapter no longer functions properly.
- Following extended storage in adverse conditions.
  In this case, notify the Sartorius Service Center.

Maintenance and repair work may be performed only by authorized service technicians who have access to the required maintenance manuals and instructions and who have received the necessary training.

We recommend that the AC adapter be inspected by a qualified service technician with regard to the following:

- Leakage current: <0.25 mA measured with a properly calibrated multimeter.
- Insulation resistance >7MOhm as measured with a constant voltage of at least 500 volts at a 500 kOhm load.

The duration and number of checks should be determined by a qualified Sartorius service technician on site based on specific ambient and operating conditions (once a year as a minimum).

# Packing the Balance for Shipping

If repairs are required, use the original packaging to transport the balance.
To ensure adequate protection for safe shipment, Sartorius products have been packaged to the extent necessary using environmentally friendly materials.
Only the original packaging provides optimum protection for the equipment.

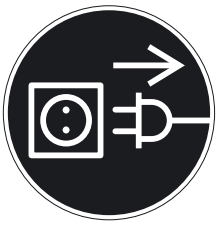

▶ Disconnect the device from the power supply.

▶ Disconnect any data cables from the device.

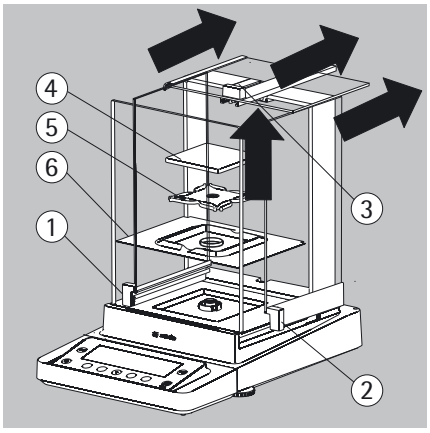


▶ Remove all items (such as weights, sensors, etc.) from the weighing chamber.

**1)** Remove the left side panel
**2)** Remove the right side panel
**3)** Remove the upper draft shield panel
**4)** Remove the weighing pan
**5)** Remove the pan support
**6)** Remove the shield plate/draft shield

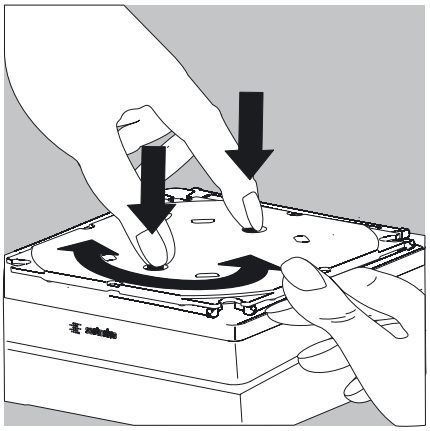

▶ On models without a draft shield: press down on the two pan support fasteners.

▶ Rotate and remove the pan support.

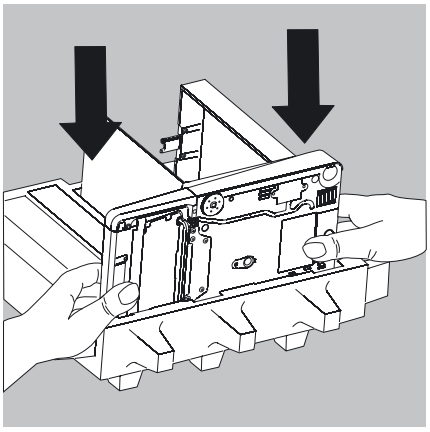

▶ Place the balance in the lower part of the packaging.

## Transporting the Parts (Large Analytical Draft Shield)

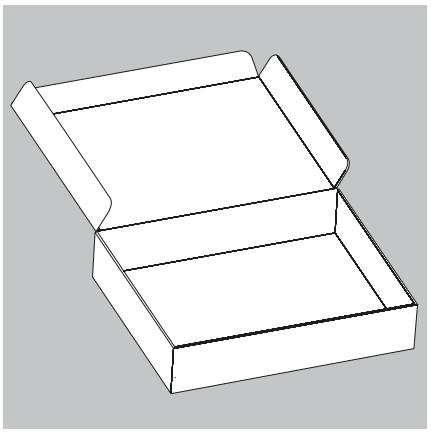

▶ Get the box for the individual parts of the balance ready.

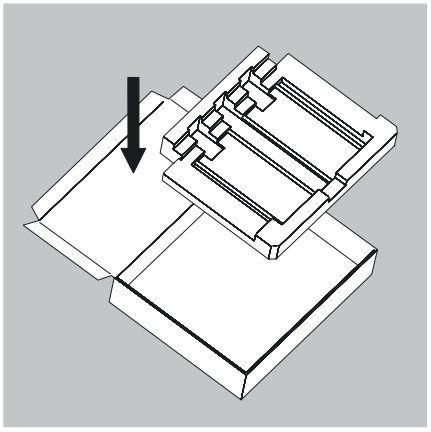

▶ Place the bottom foam piece in the box.

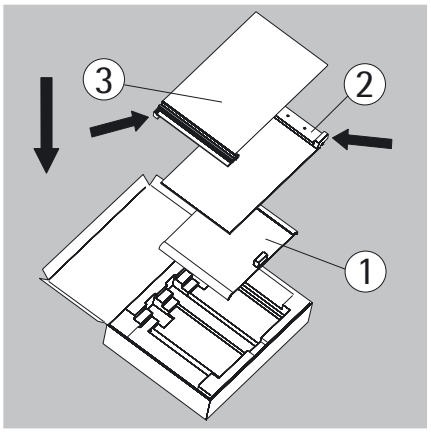


▶ Place the panels in the packaging:

**1)** Place the upper draft shield panel into the packaging (handle upwards).
**2)** Place the side draft shield panel into the packaging (handle upwards).
**3)** Place the other side panel into the packaging (handle downwards).

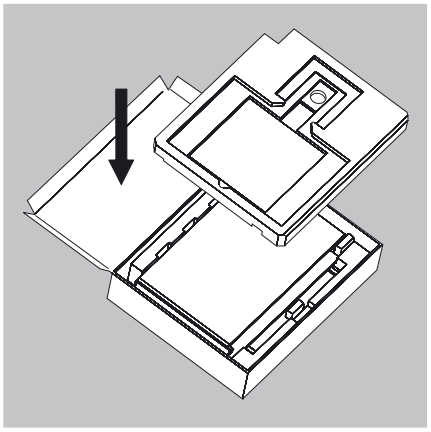

▶ Then place the top foam piece in the box.

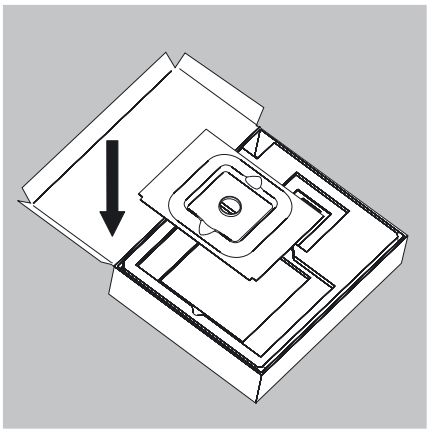

▶ Place the shield plate into the box.

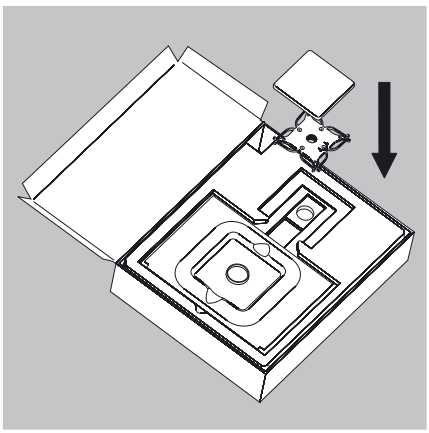

▶ Place the pan support and weighing pan into the opening.

▶ Close the box.

## Transporting the Parts (Small Analytical Draft Shield)

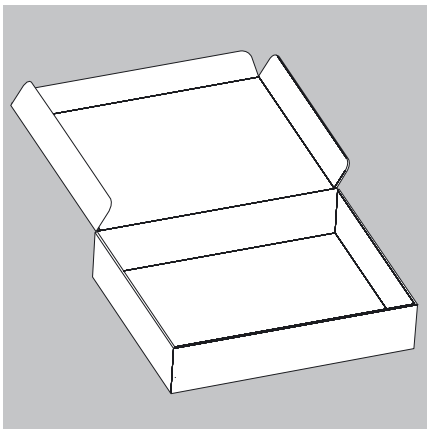

▶ Get the box ready for the individual parts of the balance.

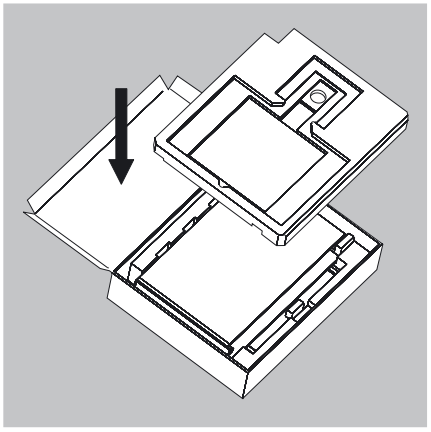

▶ Place the bottom foam piece in the box.

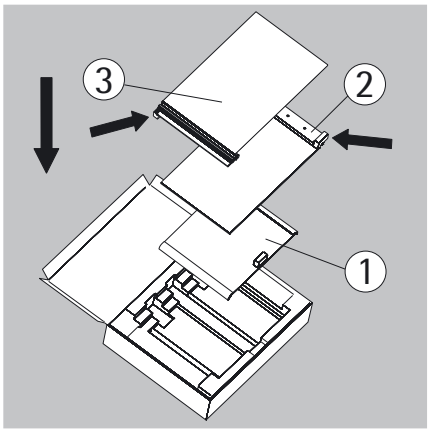


▶ Place the panels in the packaging:
**1)** Place the upper draft shield panel into the packaging (handle upwards).
**2)** Place the side draft shield panel into the packaging (handle upwards).
**3)** Place the other side panel into the packaging (handle downwards).

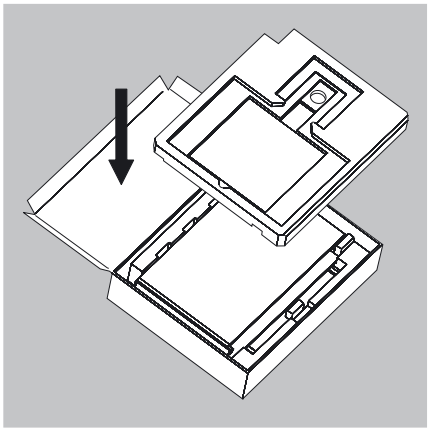

▶ Then place the top foam piece in the box.

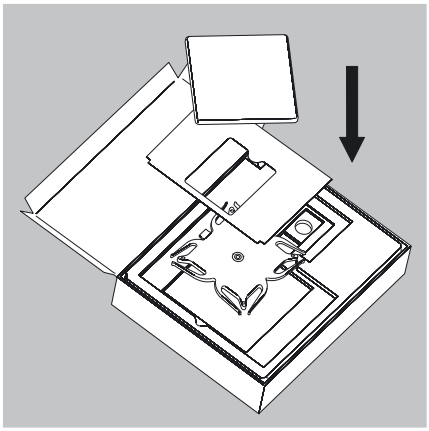

▶ Place the following parts into the foam piece in the order given:

**1)** Pan support
**2)** Shield plate
**3)** Weighing pan

▶ Close the box.

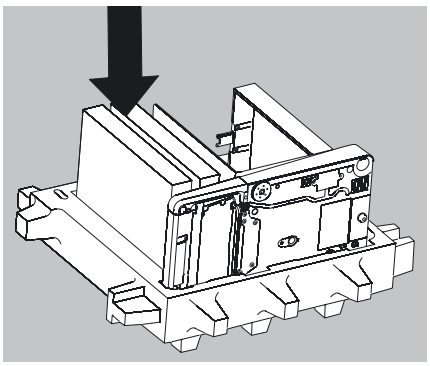

▶ Place the box into the packaging.

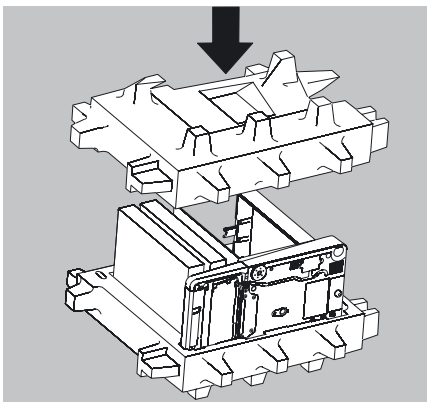

▶ Place the top part on to the packaging.

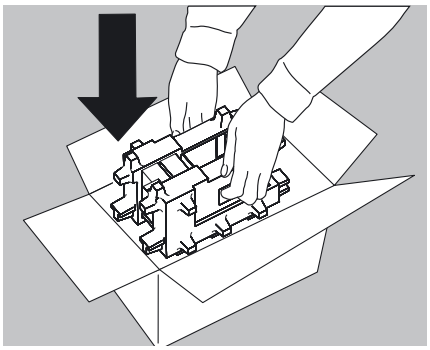

▶ Insert the balance into the box with cushioning.

▶ Send the packaged balance.

# Disposal

The packaging is made of environmentally friendly materials that can be used as secondary raw materials. If you no longer require the packaging, you can dispose of it free of charge in Germany through the Vfw dual system (contract number D-59101-2009-1129). Otherwise you should dispose of the material in accordance with the waste disposal regulations that are applicable in your area. The device, including its accessories and batteries, should not be disposed of as household waste. It should instead be recycled as electrical/electronic equipment. For more information regarding disposal and recycling, please contact our local service representatives. Our partners listed on the following website will also be able to provide assistance within the EU:

1) Go to http://www.sartorius.com.
2) Select “Services” under the “Lab Products & Services” tab.
3) Then select “Information on Disposal.”
4) Addresses for the local Sartorius disposal contacts can be found in the PDF files available for download on this page.

Sartorius will not take back equipment contaminated with hazardous materials (ABC contamination) either for repair or disposal.

Please refer to our website (www.sartorius.com) or contact the Sartorius Service Center for more detailed information regarding repair service addresses or the disposal of your device.

# Specifications

## General Data

| | |
|---|---|
| **Sartorius Power Supply** | **Model 6971987** |
| Primary | 100–240 V~, -15%/+10%, 50–60 Hz, 1.0 A |
| Secondary | 15 V, ± 5%, 2.66 A (max.), protected electronically against short circuit |
| Other data | Protection class II as per EN/IEC 60950-1 \| up to 3000 m above sea level \| IP40 as per EN 60529/IEC 60529 |
| **Power Supply Connection Cable** | Two-sided plug with a 3-pin country-specific power plug and 3-pin socket (IEC/EN60320-1/C14) for connection to the power supply |
| Other data | See the power supply label |
| **Balance** | |
| Voltage supply | Only via Sartorius power supply 6971987 |
| Input voltage | 15 V DC, ± 5% |
| Power consumption | 7 W (max.) |
| IP protection for models with a readability of ≥ 10 mg | IP54 as per EN 60529/IEC 60529 |
| **Ambient Conditions** | |
| Environment | For indoor use only |
| Storage and shipping temperature | –10°C to +60°C |
| Ambient temperature, operation* | +5°C to +40°C |
| Height | 2000 m above sea level |
| Maximum relative humidity** | 80% for temperatures up to 31°C, decreasing linearly up to 50% relative humidity at 40°C |
| **Safety of electrical equipment** | According to EN 61010-1:2001<br>Safety requirements for electrical equipment for measurement, control, and laboratory use - Part 1: General requirements |
| **Electromagnetic compatibility** | In accordance with EN 61326-1:2006<br>Electrical equipment for measurement, control, and laboratory use<br>EMC requirements – Part 1: General requirements |
| Defined immunity to interference: | Suitable for use in industrial areas |
| Limitation of emissions: | Class B (suitable for use in residential areas and areas that are connected to a low voltage network that also supplies residential buildings). |

M -.CE model balances verified for use in legal metrology comply with the requirements of Council Directive No. 90/384/EEC (2009/23/EC) with EN 45501:1992 and OIML R76:2006.

M * For -.CE model balances verified for use in legal metrology, refer to the information on the balance.
** For -.CE model balances verified for use in legal metrology, the legal regulations apply.

## Model-specific Data

Microbalances 0.001mg

| Model | | MSA6.6S | MSA6.6S-F | MSA3.6P |
|---|---|---|---|---|
| Readability | mg | 0.001 | 0.001 | 0.001/0.002/0.005 |
| Weighing capacity | g | 6.1 | 6.1 | 1.1/2.1/3.1 |
| Tare range (subtractive) | g | –6.1 | –6.1 | –3.1 |
| Repeatability | ≤±mg | 0.001 | 0.001 | 0.003/0.004/0.005 |
| Linearity | ≤±mg | 0.004 | 0.004 | 0.004 |
| Corner load (test load [g]) | µg | 4 (2 g) | 4 (2 g) | 5 (1 g) |
| Min. initial weight | mg | 2 | – | 4 |
| Sensitivity drift between +10...+30°C | ±ppm/K | 1 | 1 | 1 |
| Typical stabilization time | s | ≤ 5 | ≤ 5 | ≤ 5 |
| Typical measurement time | s | ≤ 8 | ≤ 8 | ≤ 8 |
| External standard calibration value (min. accuracy class) | g | 5 (E2) | 5 (E2) | 3 (E2) |
| Display result (depending on the set filter level) | | 0.1 – 0.4 | 0.1 – 0.4 | 0.1 – 0.4 |
| Weighing pan size ∅ | mm | 30 | 50/30 [1]) | 30 |
| Weighing chamber height | mm | 70 | 15 | 70 |
| Protection | | Protected against dust and water | | |

Ultra-Microbalances 0.0001mg

| Model | | MSA2.7S | MSA2.7S-F |
|---|---|---|---|
| Readability | mg | 0,0001 | 0,0001 |
| Weighing capacity | g | 2.1 | 2.1 |
| Tare range (subtractive) | g | –2.1 | –2.1 |
| Repeatability | ≤±mg | 0.00025 | 0.00025 |
| Linearity | ≤±mg | 0.0009 | 0.0009 |
| Corner load (test load [g]) [1]) | µg | 0.5 (1 g) | 0.5 (1 g) |
| Min. initial weight | mg | 1 | – |
| Sensitivity drift between zw. +10...+30°C | ±ppm/K | 1 | 1 |
| Typical stabilization time | s | ≤ 7 | |
| Typical measurement time | s | ≤ 10 | |
| External standard calibration value (min. accuracy class) | g | 2 (E2) | 2 (E2) |
| Display result (depending on the set filter level) | | 0.1 – 0.4 | 0.1 – 0.4 |
| Weighing pan size ∅ | mm | 20 | 50/20 [1]) |
| Weighing chamber height | mm | 70 | 15 |
| Protection | | Protected against dust and water | |

[1]) = Standard pan

* = Typical min. initial weighing according to USP (United States Pharmacopeia), USP31-NF26

## Model-specific Data

Semi-microbalances 0.01 mg

| Model | | MSA225S | MSA225P | MSA125P |
|---|---|---|---|---|
| Readability | mg | 0.01 | 0.01/0.02/0.05 | 0.01/0.1 |
| Weighing capacity | g | 220 | 60/120/220 | 60/120 |
| Tare range (subtractive) | g | – 220 | – 220 | – 120 |
| Repeatability | ≤±mg | 0 to 6 g: 0.015<br>60 to 220g: 0.025 | 0 to 6 g: 0.015<br>60 to 220g: 0.04 | 0 to 6 g: 0.015<br>60 to 120g: 0.06 |
| Linearity | ≤±mg | 0.1 | 0.15 | 0.15 |
| Corner load (test load [g]) | mg | 0.15 (100) | 0.2 (100) | 0.15 (50) |
| Min. initial weight* | mg | 20 | 20 | 20 |
| Sensitivity drift between +10 to +30°C | ±ppm/K | 1 | 1 | 1 |
| Typical stabilization time | s | ≤ 2 | ≤ 2 | ≤ 2 |
| Typical measurement time | s | ≤ 6 | ≤ 6 | ≤ 6 |
| External standard calibration value (min. accuracy class) | g | 200 (E2) | 200 (E2) | 100 (E2) |
| Display result (depending on the set filter level) | | 0.2 – 0.4 | | |
| Weighing pan size (W × D) | mm | 85 × 85 | | |
| Weighing chamber height (draft shield DU) | mm | 261 | | |
| Protection | | Protected against dust and water | | |

* = Typical min. initial weighing according to USP (United States Pharmacopeia), USP31-NF26

Analytical balances 0.1 mg

| Model | | MSA524S | MSA524P | MSA324S | MSA224S | MSA324P | MSA124S |
|---|---|---|---|---|---|---|---|
| Readability | mg | 0.1 | 0.1/0.2/0.5 | 0.1 | 0.1 | 0.1/0.2/0.5 | 0.1 |
| Weighing capacity | g | 520 | 120/240/520 | 320 | 220 | 80/160/320 | 120 |
| Tare range (subtractive) | g | – 520 | – 520 | – 320 | – 220 | – 320 | – 120 |
| Repeatability | <±mg | 0.1 | 0.15/0.2/0.4 | 0.1 | 0.07 | 0.1/0.2/0.4 | 0.1 |
| Linearity | <±mg | 0.4 | 0.5 | 0.3 | 0.2 | 0.5 | 0.2 |
| Corner load (test load [g]) | mg | 0.3 (200) | 0.4 (200) | 0.3 (200) | 0.2 (100) | 0.4 (200) | 0.2 (50) |
| Min. initial weight* | mg | 120 | 120 | 120 | 120 | 120 | 120 |
| Sensitivity drift between +10 to +30°C | ±ppm/K | 1 | 1 | 1 | 1 | 1 | 1 |
| Typical stabilization time | s | < 1 | < 1 | < 1 | < 1 | < 1 | < 1 |
| Typical measurement time | s | < 3 | < 3 | < 3 | < 3 | < 3 | < 3 |
| External standard calibration value (min. accuracy class) | g | 500 | 500 | 200+100 (E2) | 200 (E2) | 200+100 (E2) | 100 (E2) |
| Display result (depending on the set filter level) | | 0.1 – 0.4 | | | | | |
| Weighing pan size (W × D) | mm | 85 × 85 | | | | | |
| Weighing chamber height (draft shield DU) | mm | 261 | | | | | |
| Protection | | Protected against dust and water | | | | | |

* = Position according to OIML R76

## Model-specific Data

Precision balances

| Models | | MSA5203S | MSA5203P | MSA3203S | MSA3203P |
|---|---|---|---|---|---|
| Readability | mg | 1 | 1/2/5 | 1 | 1/10 |
| Weighing capacity | g | 5200 | 1200/2400/5200 | 3200 | 1010/3200 |
| Tare range (subtractive) | g | - 5200 | - 5200 | – 3200 | – 3200 |
| Repeatability | ≤±mg | 1 | 1 | 1 | 1/6 |
| Linearity | ≤±mg | 5 | 5 | 5 | 5 |
| Corner load (test load [g]) | mg | 2 (2000) | 2 (2000) | 2 (1000) | 2 (1000) |
| Min. initial weight* | g | 1.5 | 1.5 | 1.5 | 1.5 |
| Sensitivity drift between +10 to +30°C | ±ppm/K | 1 | 1 | 1 | 1 |
| Typical stabilization time | s | ≤ 1 | ≤ 1 | ≤ 1 | ≤ 1 |
| Typical measurement time | s | ≤ 2 | ≤ 2 | ≤ 2 | ≤ 1.5 |
| External standard calibration value (min. accuracy class) | g | 5000 | 5000 | 2000 | 2000 (E2) |
| Display result (depending on the set filter level) | | 0.1 – 0.4 | | | |
| Weighing pan size (W × D) | mm | 140 × 140 | | | |
| Weighing chamber height (draft shield DE) | mm | 172 | | | |
| Protection | | Protected against dust and water | | | |

* = Position according to OIML R76

| Models | | MSA2203S | MSA2203P | MSA1203S |
|---|---|---|---|---|
| Readability | mg | 1 | 1/10 | 1 |
| Weighing capacity | g | 2200 | 1010/2200 | 1200 |
| Tare range (subtractive) | g | – 2200 | – 2200 | – 1200 |
| Repeatability | ≤±mg | 1 | 1/6 | 0.7 |
| Linearity | ≤±mg | 3 | 5 | 2 |
| Corner load (test load [g]) | mg | 2 (1000) | 3 (1000) | 2 (500) |
| Min. initial weight* | g | 1.5 | 1.5 | 1.5 |
| Sensitivity drift between +10 to +30°C | ±ppm/K | 1 | 1 | 1.5 |
| Typical stabilization time | s | ≤ 1 | ≤ 1 | ≤ 1 |
| Typical measurement time | s | ≤ 1.5 | ≤ 1.5 | ≤ 1.5 |
| External standard calibration value (min. accuracy class) | g | 2000 (E2) | 1000 (E2) | 1000 (E2) |
| Display result (depending on the set filter level) | | 0.1 – 0.4 | | |
| Weighing pan size (W × D) | mm | 140 × 140 | | |
| Weighing chamber height (draft shield DE) | mm | 172 | | |
| Protection | | Protected against dust and water | | |

* = Position according to OIML R76

## Model-specific Data

Precision balances

| Models | | MSA623S | MSA623P | MSA323S |
|---|---|---|---|---|
| Readability | mg | 1 | 1/2/5 | 1 |
| Weighing capacity | g | 620 | 150/300/620 | 320 |
| Tare range (subtractive) | g | – 620 | – 620 | – 320 |
| Repeatability | ≤±mg | 0.7 | 1/2/4 | 0.7 |
| Linearity | ≤±mg | 2 | 5 | 2 |
| Corner load (test load [g]) | mg | 2 (200) | 4 (200) | 2 (200) |
| Min. initial weight* | g | 1.5 | 1.5 | 1.5 |
| Sensitivity drift between +10 to +30°C | ±ppm/K | 2 | 2 | 2 |
| Typical stabilization time | s | ≤ 0.8 | ≤ 0.8 | ≤ 0.8 |
| Typical measurement time | s | ≤ 1 | ≤ 1 | ≤ 1 |
| External standard calibration value (min. accuracy class) | g | 500 (E2) | 500 (F1) | 200 (E2) |
| Display result (depending on the set filter level) | | 0.1 – 0.4 | | |
| Weighing pan size (W × D) | mm | 140 × 140 | | |
| Weighing chamber height (draft shield DE) | mm | 172 | | |
| Protection | | Protected against dust and water | | |

* = Position according to OIML R76

| Models | | MSA14202S | MSA14202P | MSA10202S | MSA8202S |
|---|---|---|---|---|---|
| Readability | mg | 10 | 10/20/50 | 10 | 10 |
| Weighing capacity | g | 14,200 | 3,500/7,000/14,200 | 10,200 | 8,200 |
| Tare range (subtractive) | g | –14,200 | –14,200 | –10,200 | –8,200 |
| Repeatability | <±mg | 10 | 10/20/40 | 7 | 7 |
| Linearity | <±mg | 30 | 50 | 20 | 20 |
| Corner load (test load [g]) | mg | 20 (5,000) | 40 (5,000) | 20 (5,000) | 20 (5,000) |
| Min. initial weight* | g | 15 | 15 | 12 | 12 |
| Sensitivity drift between +10 to +30°C | ±ppm/K | 1.5 | 1.5 | 2 | 2 |
| Typical stabilization time | s | ≤ 1 | ≤ 1 | ≤ 1 | ≤ 1 |
| Typical measurement time | s | ≤ 1.5 | ≤ 1.5 | ≤ 1.5 | ≤ 1.5 |
| External standard calibration value (min. accuracy class) | kg | 10 (E2) | 10 (E2) | 10 (E2) | 5 (E2) |
| Display result (depending on the set filter level) | | 0.1 – 0.4 | | | |
| Weighing chamber height (draft shield DE) | mm | 206 + 206 | | | |
| Protection | | Protected against dust and water | | | |

* = Position according to OIML R76

## Model-specific Data

Precision balances

| Models | | MSA6202S | MSA6202P | MSA5202S | MSA4202S |
|---|---|---|---|---|---|
| Readability | mg | 10 | 10/20/50 | 10 | 10 |
| Weighing capacity | g | 6,200 | 1,500/3,000/ 6,200 | 5,200 | 4,200 |
| Tare range (subtractive) | g | – 6,200 | – 6,200 | – 5,200 | – 4,200 |
| Repeatability | <±mg | 7 | 7/20/40 | 6 | 7 |
| Linearity | <±mg | 20 | 50 | 10 | 20 |
| Corner load (test load [g]) | mg | 20 (2,000) | 50 (2,000) | 10 (2,000) | 30 (2,000) |
| Min. initial weight* | g | 12 | 12 | 10 | 12 |
| Sensitivity drift between +10 to +30°C | ±ppm/K | 2 | 2 | 2 | 2 |
| Typical stabilization time | s | ≤ 1 | ≤ 1 | ≤ 0.8 | ≤ 0.8 |
| Typical measurement time | s | ≤ 1.5 | ≤ 1.5 | ≤ 1 | ≤ 1 |
| External standard calibration value kg 5 (E2) 5 (F1) 5 2 (E2) | | | | | |
| (min. accuracy class) | | | | | |
| Display result | | | | | |
| (depending on the set filter level) 0.1 – 0.4 | | | | | |
| Weighing pan size (W + D) mm 206 + 206 206 + 206 140 + 140 206 + 206 | | | | | |
| Protection | Protected against dust and water | | | | |

* = Position according to OIML R76

| Models | | MSA2202S | MSA1202S | MSA70201S | MSA36201S | MSA36201P |
|---|---|---|---|---|---|---|
| Readability | mg | 10 | 10 | 100 | 100 | 100/1000 |
| Weighing capacity | g | 2200 | 1200 | 70,200 | 36,200 | 10,200/36,200 |
| Tare range (subtractive) | g | – 2200 | – 1200 | – 70,200 | – 36,200 | – 36,200 |
| Repeatability | <±mg | 7 | 7 | 70 | 70 | 70/500 |
| Linearity | <±mg | 20 | 20 | 500 | 200 | 200 |
| Corner load (test load [g]) | mg | 20 (1000) | 20 (500) | 500 (20,000) | 300 (10,000) | 300 (10,000) |
| Min. initial weight* | g | 12 | 12 | 120 | 120 | 120 |
| Sensitivity drift between +10 and +30°C | ±ppm/K | 2 | 2 | 3 | 2 | 2 |
| Typical stabilization time | s | ≤ 0,8 | ≤ 0,8 | ≤ 1 | ≤ 1 | ≤ 1 |
| Typical measurement time | s | ≤ 1 | ≤ 1 | ≤ 1,5 | ≤ 1,5 | ≤ 1,5 |
| External standard calibration value (min. accuracy class) | kg | 2 (F1) | 1 (F1) | 50 (F1) | 20 (F1) | 20 (F1) |
| Display result (depending on the set filter level) | | 0,1 – 0,4 | | | | |
| Weighing pan size (W + D) | mm | 206 × 206 | 206 × 206 | 400 × 300 | 400 × 300 | 400 × 300 |
| IP protection | | IP54 | | | | |

* = Position according to OIML R76

## Model-specific Data

Precision balances

| Models | | MSA20201S | MSA12201S | MSA8201S | MSA5201S |
|---|---|---|---|---|---|
| Readability | mg | 100 | 100 | 100 | 100 |
| Weighing capacity | g | 20,200 | 12,200 | 8200 | 5200 |
| Tare range (subtractive) | g | – 20,200 | – 12,200 | – 8200 | – 5200 |
| Reproducibility | ≤±mg | 70 | 50 | 50 | 50 |
| Linearity | ≤±mg | 200 | 100 | 100 | 100 |
| Corner load (test load [g]) | mg | 300 (5000) | 200 (5000) | 200 (5000) | 200 (2000) |
| Min. initial weight* | g | 120 | 100 | 100 | 100 |
| Sensitivity drift between +10 and +30°C | ±ppm/K | 2 | 4 | 4 | 4 |
| Typical stabilization time | s | ≤ 1 | ≤ 0,8 | ≤ 0,8 | ≤ 0,8 |
| Typical measurement time | s | ≤ 1.5 | ≤ 1 | ≤ 1 | ≤ 1 |
| External standard calibration value (min. accuracy class) | kg | 20 (F1) | 10 (F1) | 5 (F2) | 5 (F2) |
| Display result (depending on the set filter level) | | 0.1 – 0.4 | | | |
| Weighing pan size (W × D) | mm | 206 × 206 | | | |
| IP protection | | IP54 | | | |

* = Position according to OIML R76

| Models | | MSA70200S | MSA36200S |
|---|---|---|---|
| Readability | mg | 1000 | 1000 |
| Weighing capacity | g | 70,200 | 36,200 |
| Tare range (subtractive) | g | – 70,200 | – 36,200 |
| Reproducibility | ≤±mg | 500 | 500 |
| Linearity | ≤±mg | 1000 | 1,000 |
| Corner load (test load [g]) | mg | 1000 (20,000) | 1,000 (10,000) |
| Min. initial weight* | g | 1000 | 1000 |
| Sensitivity drift between +10 and +30°C | ±ppm/K | 3 | 2 |
| Typical measurement time | s | ≤ 0.8 | ≤ 0.8 |
| Typische Messzeit | s | ≤ 1 | ≤ 1 |
| External standard calibration value (min. accuracy class) | kg | 50 (F1) | 20 (F1) |
| Display result (depending on the set filter level) | | 0.1 – 0.4 | |
| Weighing pan size (W × D) | mm | 400 × 300 | |
| IP protection | | IP54 | |

* = Position according to OIML R76

## Model-specific Data

Verified Models with EC Type Approval Certificate: Micro- and ultramicrobalances

| Model | | MSA6.6S-0CE | MSA2.7S-0CE | MSA3.6P-0CE |
|---|---|---|---|---|
| Accuracy class* | | (I) | (I) | (I) |
| For verified models: EC Type Approval Certificate D09-09-015, Type: MSX | | | | |
| Scale interval d* | mg | 0.001 | 0.0001 | 0.001/0.002/0.005 |
| Weighing capacity max* | g | 6.1 | 2.1 | 1.1/2.1/3.1 |
| Calibration value e* | mg | 1 | 1 | 1 |
| Min. load min* | mg | 0.1 | 0.01 | 0.1 |
| Tare equalization range (subtractive) | | ≤ 100 % from max. weighing capacity | | |
| Application range according to DIR* | g | 0.001 – 6.1 | 0.001 – 2.1 | 0.001 – 3.1 |
| Min. initial weight** | mg | 2 | 1 | 4 |
| Typical stabilization time | s | ≤ 5 | ≤ 7 | ≤ 5 |
| Typical measurement time | s | ≤ 8 | ≤ 10 | ≤ 8 |
| External standard calibration value (min. accuracy class) | g | 5 | 2 | 3 |
| Application range (temperature) | | With “isoCAL” function: +5 to +40°C \| Without “isoCAL” function: +15 to +25°C | | |
| Display result (depending on the set filter level) | | By selection of 1 of 4 optimized filter levels | | |
| Weighing pan size ∅ | mm | 30 | 20 | 30 |
| Weighing chamber height (draft shield DM) | mm | 70 | 70 | 70 |
| Protection | | Protected against dust and water | | |

* DIR = Directive 90/384/EEC on non-automatic weighing instruments used within the European Economic Area
** = Typical min. initial weighing according to USP (United States Pharmacopeia), USP31-NF26

## Model-specific Data

Verified models with EC Type Approval Certificate: Semi-microbalances 0.01 mg

| Model | | MSA225S-0CE | MSA225P-0CE | MSA125P-0CE |
|---|---|---|---|---|
| Accuracy class* | | (I) | (I) | (I) |
| For verified models: EC Type-Approval Certificate D09-09-015, Type: MSX | | | | |
| Scale interval d* | mg | 0.01 | 0.01/0.02/0.05 | 0.01/0.1 |
| Weighing capacity max* | g | 220 | 60/120/220 | 60/120 |
| Calibration value e* | mg | 1 | 1 | 1 |
| Min. load min* | mg | 1 | 1 | 1 |
| Tare equalization range (subtractive) | | ≤ 100% from max. weighing capacity | | |
| Application range according to DIR* | g | 0.001 – 220 | 0.001 – 220 | 0.001 – 120 |
| Min. initial weight** | mg | 20 | 20 | 20 |
| Typical stabilization time | s | ≤ 2 | ≤ 2 | ≤ 2 |
| Typical measurement time | s | ≤ 6 | ≤ 6 | ≤ 6 |
| External standard calibration value (min. accuracy class) | g | 200 (E2) | 200 (E2) | 100 (E2) |
| Application range (temperature) | | With “isoCAL” function: +5 to +40 °C \| Without “isoCAL” function: +15 to +25 °C | | |
| Adaptation to ambient conditions | | By selection of 1 of 4 optimized filter levels | | |
| Display result (depending on the set filter level) | | 0.2 – 0.4 | | |
| Weighing pan size (W × D) | mm | 85 × 85 | | |
| Weighing chamber height (draft shield DU) | mm | 261 | | |
| Protection | | Protected against dust and water | | |

Verified models with EC Type Approval Certificate: Analytical balances 0.1 mg

| Model | | MSA524S-0CE | MSA524P-0CE | MSA324S-0CE | MSA224S-0CE | MSA324P-0CE | MSA124S-0CE |
|---|---|---|---|---|---|---|---|
| Accuracy class* | | (I) | (I) | (I) | (I) | (I) | (I) |
| For verified models: EC Type-Approval Certificate D09-09-015, Type: MSX | | | | | | | |
| Scale interval d* | mg | 0.1 | 0.1/0.2/0.5 | 0.1 | 0.1 | 0.1/0.2/0.5 | 0,1 |
| Weighing capacity max* | g | 520 | 120/240/520 | 320 | 220 | 80/160/320 | 120 |
| Calibration value e* | mg | 1 | 1 | 1 | 1 | 1 | 1 |
| Min. load min* | mg | 10 | 10 | 10 | 10 | 10 | 10 |
| Tare equalization range (subtractive) | | ≤ 100% from max. weighing capacity | | | | | |
| Application range according to DIR* | g | 0.01–520 | 0.01–520 | 0.01–320 | 0.01–220 | 0.01–320 | 0.01–120 |
| Min. initial weight** | mg | 120 | 120 | 120 | 120 | 120 | 120 |
| Typical stabilization time | s | ≤ 1 | ≤ 1 | ≤ 1 | ≤ 1 | ≤ 1 | ≤ 1 |
| Typical measurement time | s | ≤ 3 | ≤ 3 | ≤ 3 | ≤ 3 | ≤ 3 | ≤ 3 |
| External standard calibration value (min. accuracy class) | g | 500 (E2 | 500 (E2) | 200+100 (E2) | 200 (E2) | 200 +100 (E2) | 100 (E2 |
| Application range (temperature) | | With “isoCAL” function: +5 to +40 °C \| Without “isoCAL” function: +15 to +25 °C | | | | | |
| Display result (depending on the set filter level) | | 0.1 – 0.4 | | | | | |
| Weighing pan size (W × D) | mm | 85 × 85 | | | | | |
| Weighing chamber height (draft shield DU) | mm | 261 | | | | | |
| Protection | | Protected against dust and water | | | | | |

* DIR = Directive 90/384/EEC on non-automatic weighing instruments used within the European Economic Area
** = Typical min. initial weighing according to USP (United States Pharmacopeia), USP31-NF26

## Model-specific Data

Verified models with EC Type Approval Certificate: Precision balances

| Models | | MSA5203S-0CE | MSA5203P-0CE | MSA3203S-0CE | MSA3203P-0CE |
|---|---|---|---|---|---|
| Accuracy class* | | (I) | (I) | (I) | (I) |
| For verified models: EC Type-Approval Certificate D09-09-015, Type: MSX | | | | | |
| Scale interval d* | mg | 1 | 1/2/5 | 1 | 1/10 |
| Weighing capacity max* | g | 5200 | 1200/2400/5200 | 3200 | 1010/3200 |
| Calibration value e* | mg | 10 | 10 | 10 | 10 |
| Min. load min* | mg | 100 | 100 | 100 | 100 |
| Tare equalization range (subtractive) | | ≤ 100% from max. weighing capacity | | | |
| Application range according to DIR* | g | 0.1 – 5200 | 0.1 – 5200 | 0.1 – 3200 | 0.1 – 3200 |
| Min. initial weight** | g | 1.5 | 1.5 | 1.5 | 1.5 |
| Typical stabilization time | s | ≤ 1 | ≤ 1 | ≤ 1 | ≤ 1 |
| Typical measurement time | s | ≤ 2 | ≤ 2 | ≤ 2 | ≤ 1.5 |
| External standard calibration value (min. accuracy class) | g | 5000 (E2 | 5000 (E2 | 2000 (E2 | 2000 (E2) |
| Application range (temperature) | | With “isoCAL” function: +5 ... +40 °C<br>Without “isoCAL” function: +15 ... +25 °C | | | |
| Display result (depending on the set filter level) | | 0.1 – 0.4 | | | |
| Weighing pan size (W × D) | mm | 140 × 140 | | | |
| Weighing chamber height (draft shield DE) | mm | 172 | | | |
| Protection | | Protected against dust and water | | | |

| Models | | MSA2203S-0CE | MSA2203P-0CE | MSA1203S-0CE |
|---|---|---|---|---|
| Accuracy class* | | (I) | (I) | (I) |
| For verified models: EC Type-Approval Certificate D09-09-015, Type: MSX | | | | |
| Scale interval d* | mg | 1 | 1/10 | 1 |
| Weighing capacity max* | g | 2200 | 1010/2200 | 1200 |
| Calibration value e* | mg | 10 | 10 | 10 |
| Min. load min* | mg | 100 | 100 | 100 |
| Tare equalization range (subtractive) | | ≤ 100% from max. weighing capacity | | |
| Application range according to DIR* | g | 0.1 – 2200 | 0.1 – 2200 | 0.1 – 1200 |
| Min. initial weight** | g | 1.5 | 1.5 | 1.5 |
| Typical stabilization time | s | ≤ 1 | ≤ 1 | ≤ 1 |
| Typical measurement time | s | ≤ 1.5 | ≤ 1.5 | ≤ 1.5 |
| External standard calibration value (min. accuracy class) | g | 2000 (E2) | 1000 (E2) | 1000 (E2) |
| Application range (temperature) | | With “isoCAL” function: +5 ... +40 °C<br>Without “isoCAL” function: +15 ... +25 °C | | |
| Display result (depending on the set filter level) | | 0.1 – 0.4 | | |
| Weighing pan size (W × D) | mm | 140 × 140 | | |
| Weighing chamber height (draft shield DE) | mm | 172 | | |
| Protection | | Protected against dust and water | | |

* DIR = Directive 90/384/EEC on non-automatic weighing instruments used within the European Economic Area
** = Typical min. initial weighing according to USP (United States Pharmacopeia), USP31-NF26

## Model-specific Data

Verified models with EC Type Approval Certificate: Precision balances

| Models | | MSA623S-0CE | MSA623P-0CE | MSA323S-0CE |
|---|---|---|---|---|
| Accuracy class* | | (II) | (II) | (II) |
| For verified models: EG-Type-Approval Certificate D09-09-015, Type: MSX | | | | |
| Scale interval d* | mg | 1 | 1/2/5 | 1 |
| Weighing capacity max* | g | 620 | 150/300/620 | 320 |
| Calibration value e* | mg | 10 | 10 | 10 |
| Min. load min* | mg | 20 | 20 | 20 |
| Tare equalization range (subtractive) | | ≤ 100% from max. weighing capacity | | |
| Application range according to DIR* | g | 0.02 – 620 | 0.02 – 620 | 0.02 – 320 |
| Min. initial weight** | g | 1.5 | 1.5 | 1.5 |
| Typical stabilization time | s | ≤ 0.8 | ≤ 0.8 | ≤ 0.8 |
| Typical measurement time | s | ≤ 1 | ≤ 1 | ≤ 1 |
| Application range (temperature) | | With “isoCAL” function: +5 to +40 °C \| Without “isoCAL” function: +10 to +30 °C | | |
| Display result (depending on the set filter level) | | 0.1 – 0.4 | | |
| Weighing pan size (W × D) | mm | 140 × 140 | | |
| Weighing chamber height (draft shield DE)) | mm | 172 | | |
| Protection | | Protected against dust and water | | |

| Models | | MSA14202S-0CE | MSA14202P-0CE | MSA10202S-0CE | MSA8202S-0CE |
|---|---|---|---|---|---|
| Accuracy class* | | (I) | (I) | (II) | (II) |
| For verified models: EC Type-Approval Certificate D09-09-015, Type: MSX | | | | | |
| Scale interval d* | g | 0.01 | 0.01/0.02/0.05 | 0.01 | 0.01 |
| Weighing capacity max* | g | 14,200 | 3500/7000/ 14,200 | 10,200 | 8200 |
| Calibration value e* | g | 0.1 | 0.1 | 0.1 | 0.1 |
| Min. load min* | g | 1 | 1 | 1 | 0.5 |
| Tare equalization range (subtractive) | | ≤ 100% from max. weighing capacity | | | |
| Application range according to DIR* | g | 1 – 14,200 | 1 – 14,200 | 1 – 10,200 | 0.5 – 8200 |
| Min. initial weight** | g | 15 | 15 | 12 | 12 |
| Typical stabilization time | s | ≤ 1 | ≤ 1 | ≤ 1 | ≤ 1 |
| Typical measurement time | s | ≤ 1.5 | ≤ 1.5 | ≤ 1.5 | ≤ 1.5 |
| Application range (temperature):<br>With “isoCAL” function<br>Without “isoCAL” function | | <br>+5 to +40 °C<br>+15 to +25 °C | <br>+5 to +40 °C<br>+15 to +25 °C | <br>+5 to +40 °C<br>+15 to +25 °C | <br>+5 to +40 °C<br>+10 to +30 °C |
| Display result (depending on the set filter level) | | 0.1 – 0.4 | | | |
| Weighing pan size (W × D) | mm | 206 × 206 | | | |
| Protection | | Protected against dust and water | | | |

* DIR = Directive 90/384/EEC on non-automatic weighing instruments used within the European Economic Area
** = Typical min. initial weighing according to USP (United States Pharmacopeia), USP31-NF26

## Model-specific Data

Verified models with EC Type Approval Certificate: Precision balances

| Models | | MSA6202S-0CE | MSA6202P-0CE | MSA5202S-0CE | MSA4202S-0CE |
|---|---|---|---|---|---|
| Accuracy class* | | (II) | (II) | (II) | (II) |
| For verified models: EC Type-Approval Certificate D09-09-015, Type: MSX | | | | | |
| Scale interval d* | g | 0.01 | 0.01/0.02/0.05 | 0.01 | 0.01 |
| Weighing capacity max* | g | 6200 | 1500/3000/6200 | 5200 | 4200 |
| Calibration value e* | g | 0.1 | 0.1 | 0.1 | 0.1 |
| Min. load min* | g | 0.5 | 0.5 | 0.5 | 0.5 |
| Tare equalization range (subtractive) | | ≤ 100% from max. weighing capacity | | | |
| Application range according to DIR* | g | 0.5 – 6200 | 0.5 – 6200 | 0.5 – 5200 | 0.5 – 4200 |
| Min. initial weight** | g | 12 | 12 | 10 | 12 |
| Typical stabilization time | s | ≤ 1 | ≤ 1 | ≤ 0.8 | ≤ 0.8 |
| Typical measurement time | s | ≤ 1.5 | ≤ 1.5 | ≤ 1 | ≤ 1 |
| Application range (temperature):<br>With “isoCAL” function<br>Without “isoCAL” function | | <br>+5 to +40 °C<br>+10 to +30 °C | <br>+5 to +40 °C<br>+10 to +30 °C | | <br>+5 to +40 °C<br>+10 to +30 °C |
| Display result<br>(depending on the set filter level) | | 0.1 – 0.4 | | | |
| Weighing pan size (W × D) | mm | 206 × 206 | 206 × 206 | 140 × 140 | 206 × 206 |
| Protection | | Protected against dust and water | | | |

| Models | | MSA2202S-0CE | MSA1202S-0CE | MSA36201S-0CE | MSA36201P-0CE | MSA20201S-0CE |
|---|---|---|---|---|---|---|
| Accuracy class* | | (II) | (II) | (II) | (II) | (II) |
| For verified models: EC Type-Approval Certificate D09-09-015, Type: MSX | | | | | | |
| Scale interval d* | mg | 10 | 10 | 100 | 100/1000 | 100 |
| Weighing capacity max* | g | 2200 | 1200 | 36,200 | 10,200 /36,200 | 20,200 |
| Calibration value e* | g | 0.1 | 0.1 | 1 | 1 | 1 |
| Min. load min* | g | 0.5 | 0.5 | 5 | 5 | 5 |
| Tare equalization range (subtractive) | | ≤ 100% from max. weighing capacity | | | | |
| Application range according to DIR* | g | 0.5 – 2200 | 0.5 – 1200 | 5 – 36,200 | 5 – 36,200 | 5 – 20,200 |
| Min. initial weight** | g | 12 | 12 | 120 | 120 | 120 |
| Typical stabilization time | s | ≤ 0.8 | ≤ 0.8 | ≤ 1.5 | ≤ 1.5 | ≤ 1.5 |
| Typical measurement time | s | ≤ 1 | ≤ 1 | ≤ 2 | ≤ 2 | ≤ 2 |
| Application range (temperature) | | With “isoCAL” function: +5 to +40 °C \| Without “isoCAL” function: +10 to +30 °C | | | | |
| Display result<br>(depending on the set filter level) | | 0.1 – 0.4 | | | | |
| Weighing pan size (W + D) | mm | 206 × 206 | 206 × 206 | 400 × 300 | 400 × 300 | 400 × 300 |
| IP protection | | IP54 | | | | |

* DIR = Directive 90/384/EEC on non-automatic weighing instruments used within the European Economic Area
** = Typical min. initial weighing according to USP (United States Pharmacopeia), USP31-NF26

## Model-specific Data

Verified models with EC Type Approval Certificate: Precision balances

| Models | | MSA12201S-0CE | MSA8201S-0CE | MSA5201S-0CE | MSA70200S-0CE | MSA36200S-0CE |
|---|---|---|---|---|---|---|
| Accuracy class* | | (II) | (II) | (II) | (II) | (II) |
| For verified models: EC Type-Approval Certificate D09-09-015, Type: MSX | | | | | | |
| Scale interval d* | mg | 100 | 100 | 100 | 1000 | 1000 |
| Weighing capacity max* | g | 12,200 | 8200 | 5200 | 70,200 | 36,200 |
| Calibration value e* | g | 1 | 1 | 1 | 10 | 1 |
| Min. load min* | g | 5 | 5 | 5 | 50 | 50 |
| Tare equalization range (subtractive) | | ≤ 100% from max. weighing capacity | | | | |
| Application range according to DIR* | g | 5 – 12,200 | 5 – 8200 | 5 – 5200 | 50 – 70,200 | 50 – 36,200 |
| Min. initial weight** | g | 100 | 100 | 100 | 1000 | 1000 |
| Typical stabilization time | s | ≤ 0.8 | ≤ 0.8 | ≤ 0.8 | ≤ 1 | ≤ 1 |
| Typical measurement time | s | ≤ 1 | ≤ 1 | ≤ 1 | ≤ 1.2 | ≤ 1.2 |
| Application range (temperature) | | With “isoCAL” function: +5 to +40°C \| Without “isoCAL” function: +10 to +30°C | | | | |
| Display result (depending on the set filter level) | | 0,1 – 0,4 | | | | |
| Weighing pan size (W × D) | mm | 206 × 206 | 206 × 206 | 400 × 300 | 400 × 300 | 400 × 300 |
| IP protection | | IP54 | | | | |

* DIR = Directive 90/384/EEC on non-automatic weighing instruments used within the European Economic Area
** = Typical min. initial weighing according to USP (United States Pharmacopeia), USP31-NF26

# Balance Dimensions

## Microbalances

All dimensions are given in millimeters

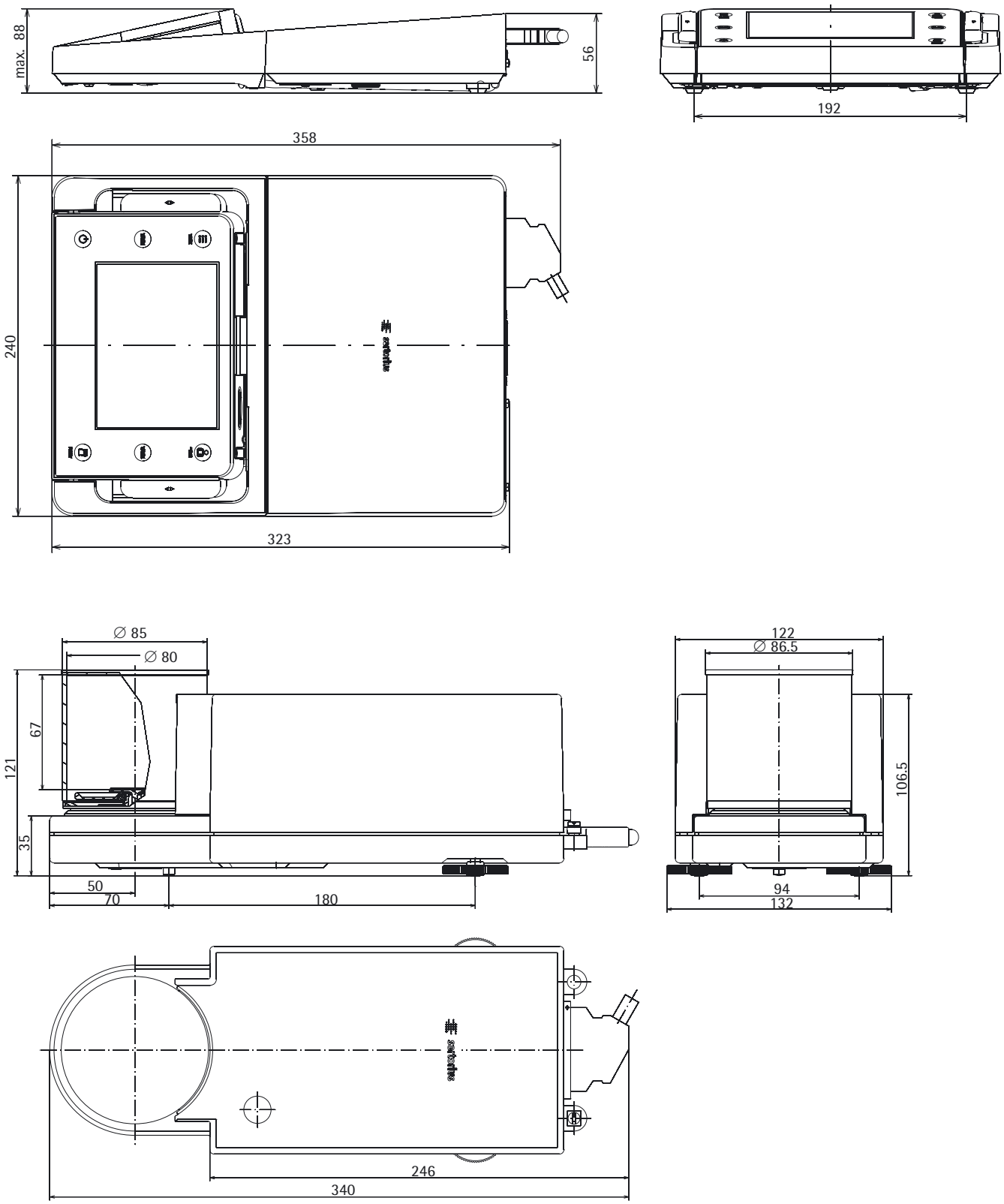

## Filter-Microbalances

All dimensions are given in millimeters

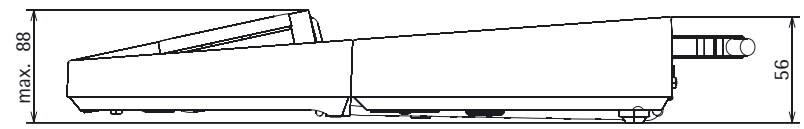


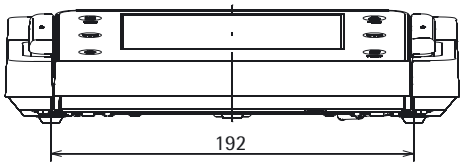


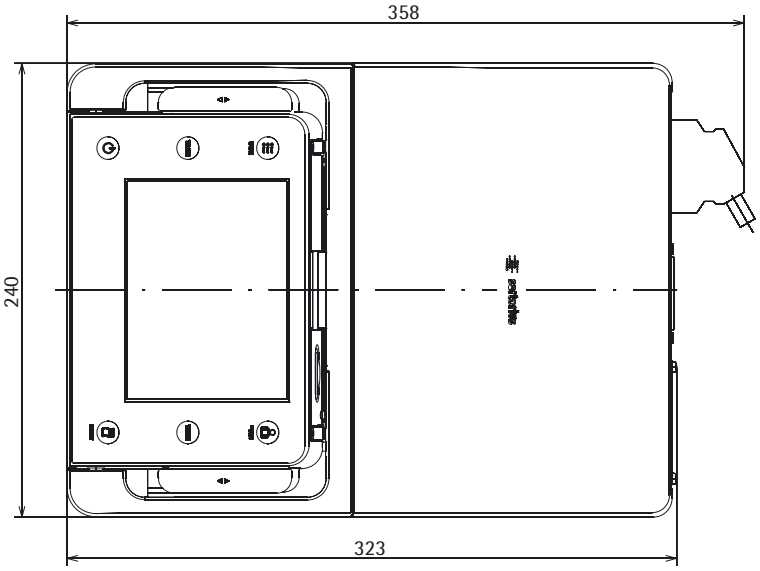


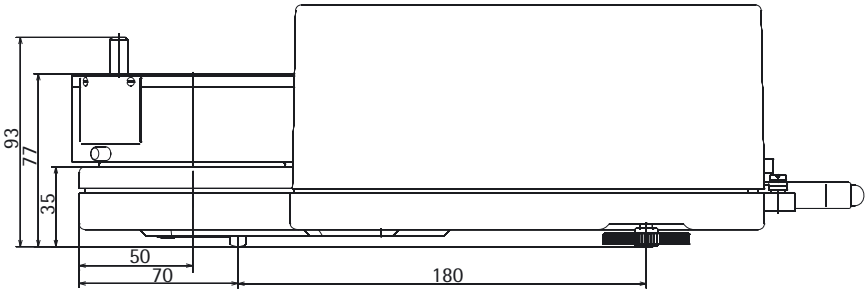


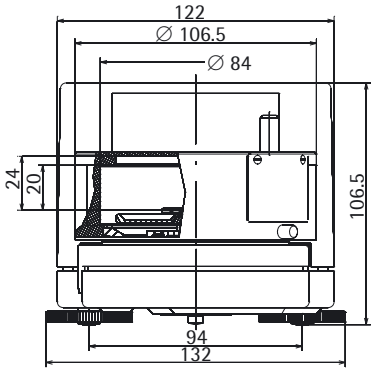


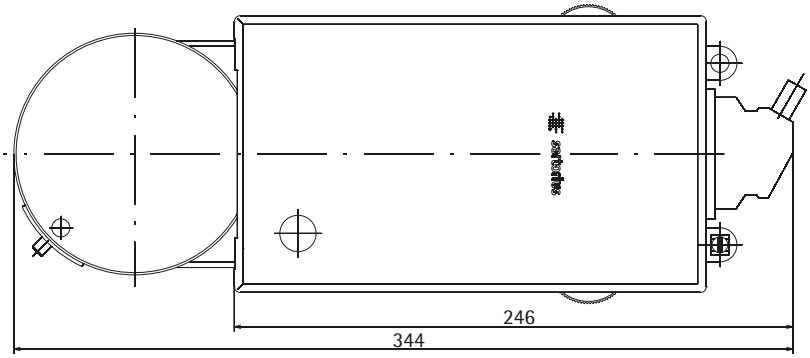

## Semi-microbalances

All dimensions are given in millimeters

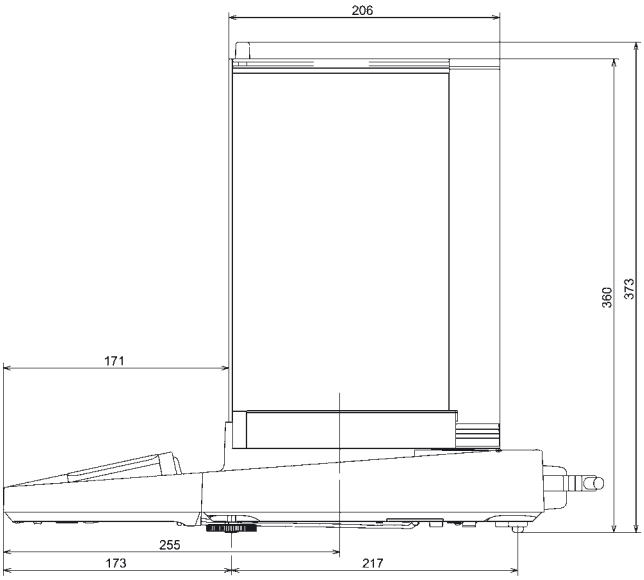


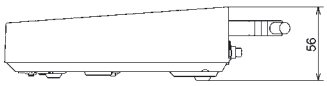


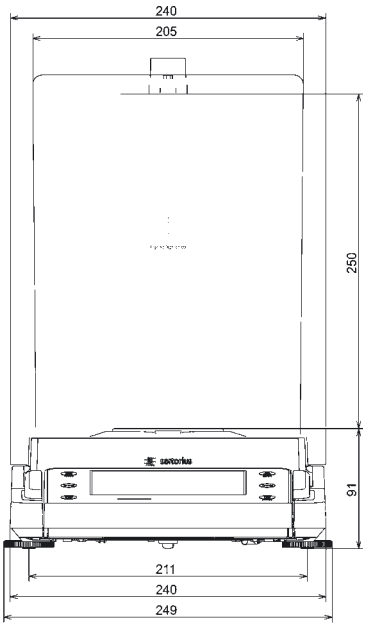


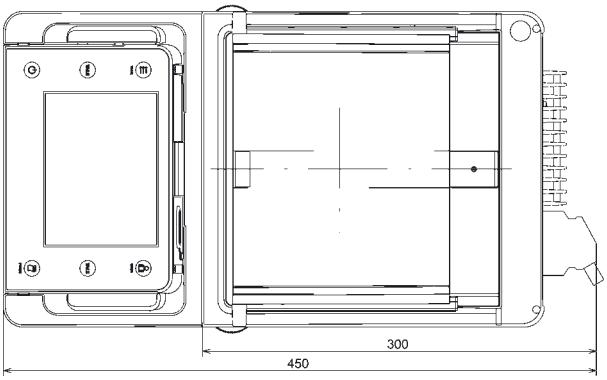


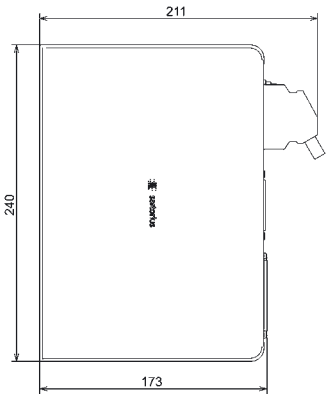


Innenmaße Windschutz DA/DI
Windshield inside dimensions

(H)250 x (B)192 x (T)154

## Analytical Balances with Manual DU Draft Shield

All dimensions are given in millimeters

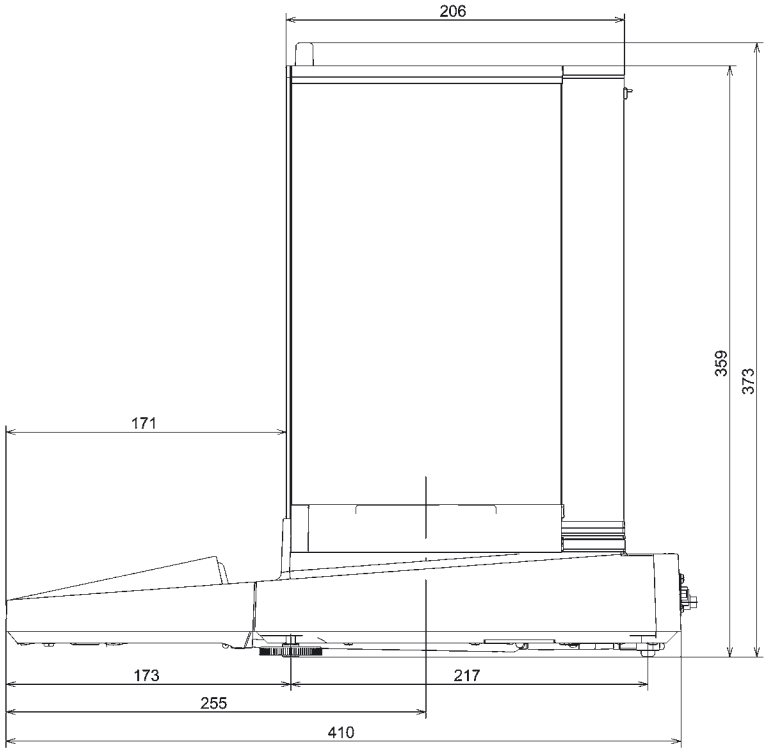


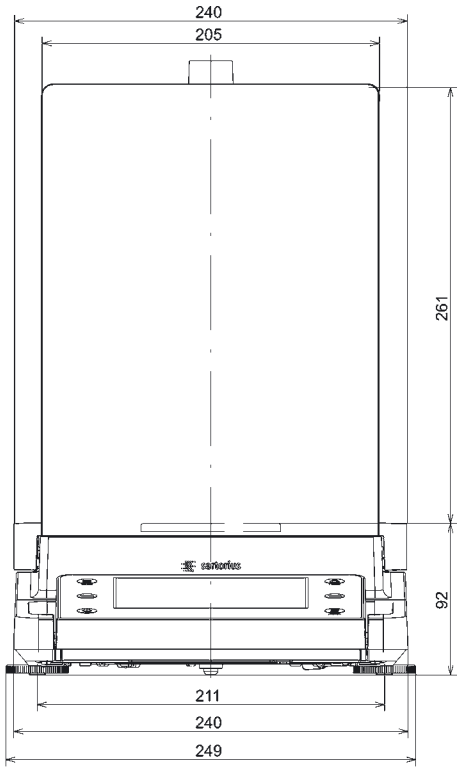


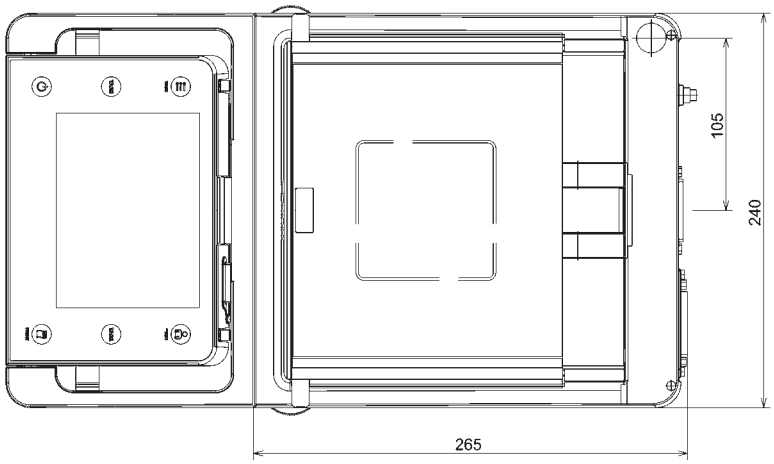


Windshield inside dimensions

(H)261 x (B)193 x (T)191

## Precision Balances with a Readability of 1 mg and Manual DE Draft Shield

All dimensions are given in millimeters

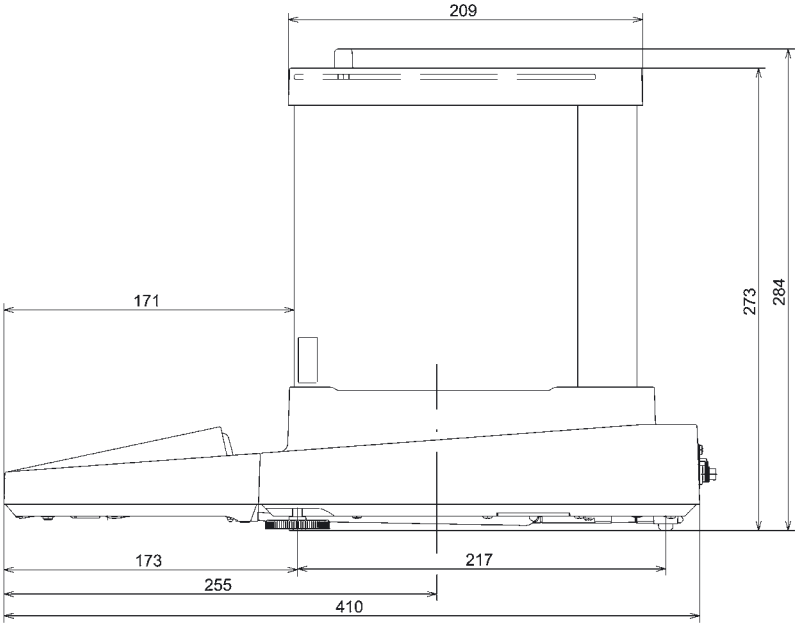


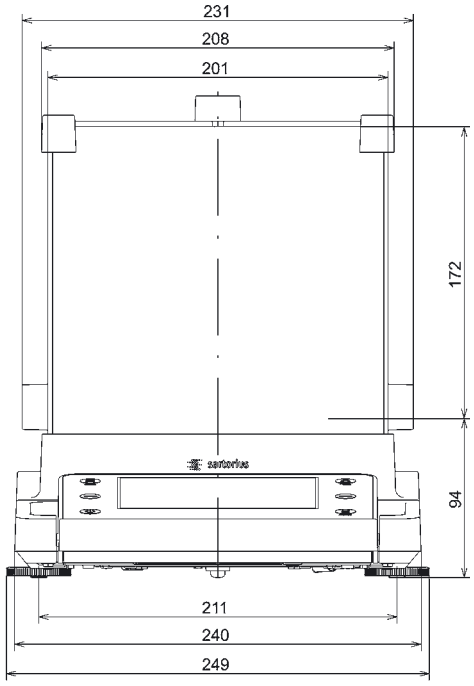


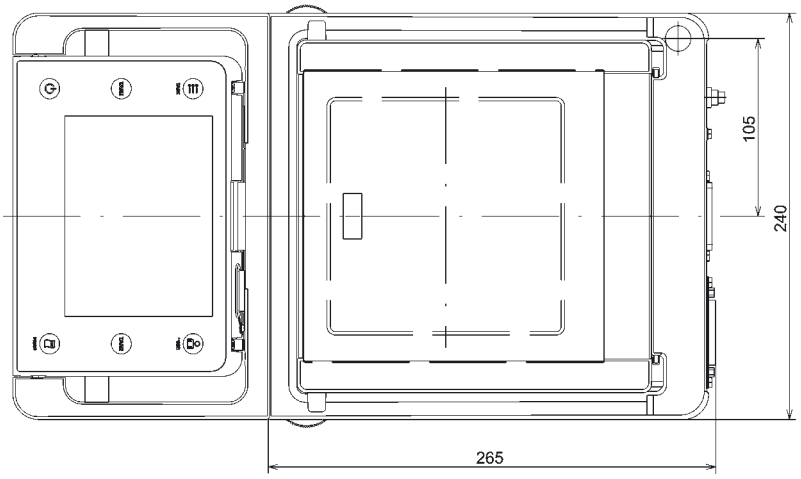


Windshield inside dimensions

(H)172 x (B)193 x (T)191

## Precision Balances with a Readability of 1 mg and Framed DR Draft Shield

All dimensions are given in millimeters

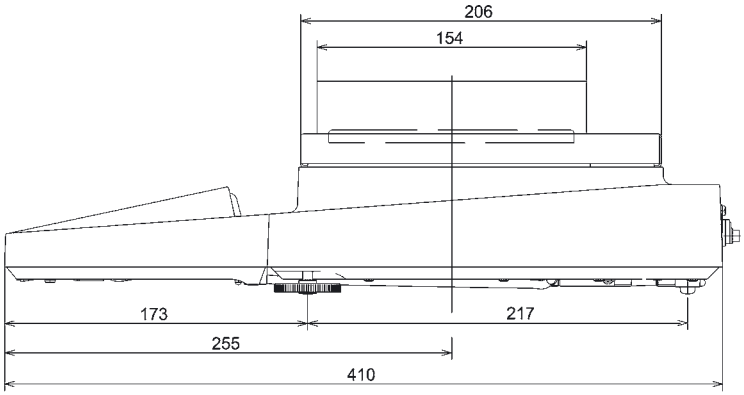


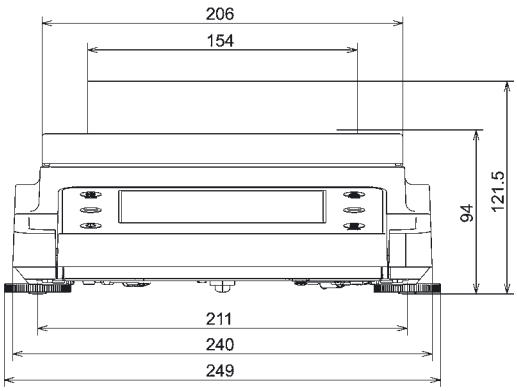


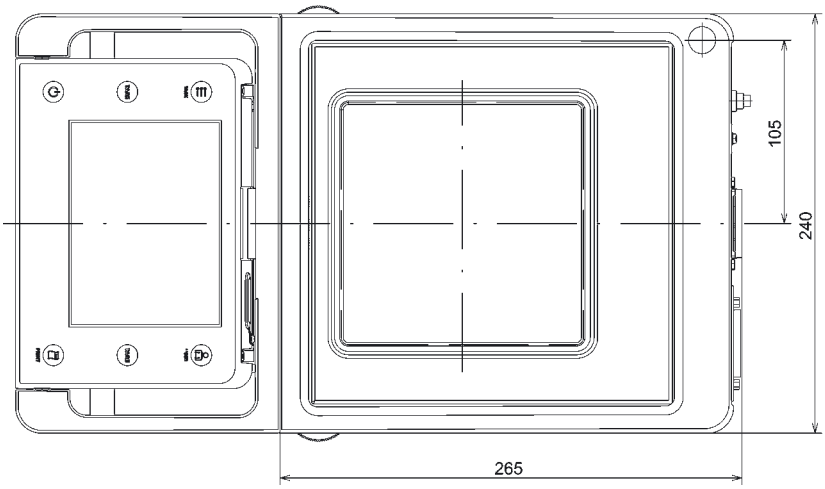

## Precision Balances with no Draft Shield with a Weighing Range of up to 15 kg

All dimensions are given in millimeters

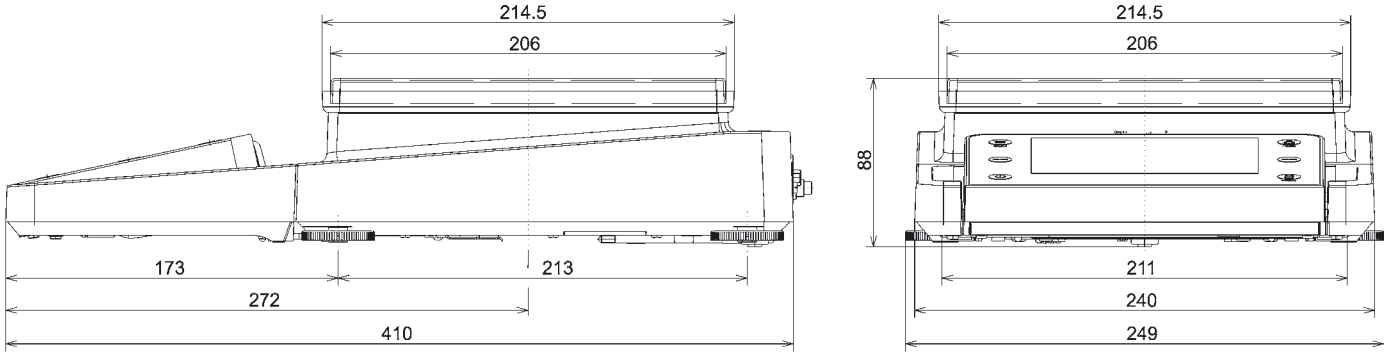


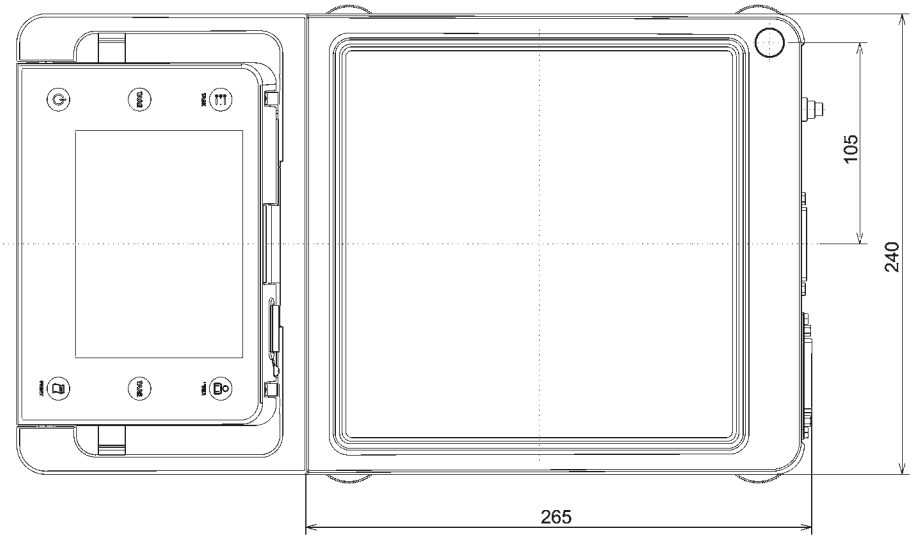

## Precision Balances with no Draft Shield with a Weighing Range of 20 kg or More

All dimensions are given in millimeters

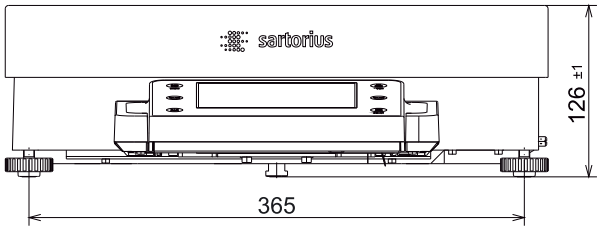


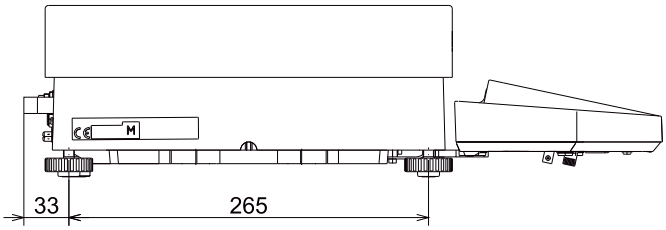


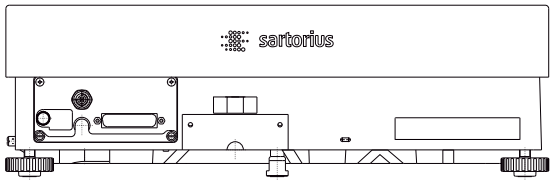


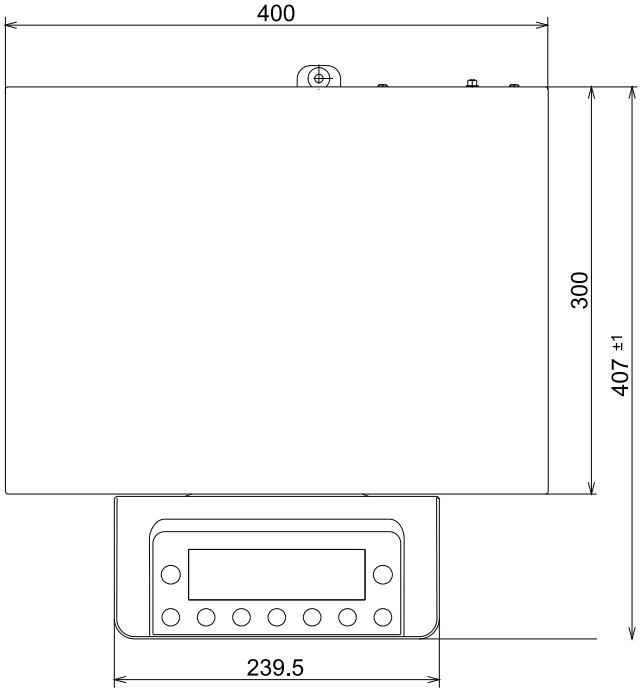

# Accessories

## Cubis® Optional Accessories

### Printers and Communication

| | |
|---|---|
| Verifiable data printer for connection to RS-232, 25-pin accessory interface | YDP10-0CE |
| Verifiable data printer with *Bluetooth*® data transmission (with YDO01MS-B or IB option only) | YDP10BT-0CE |
| Color ribbon for YDP10-0CE and YDP10BT-0CE | 6906918 |
| Paper rolls for printer YDP10-0CE; 5 rolls 50 m each | 6906937 |
| *Bluetooth*® data interface for wireless connection of data printer YDP10BT | YDO01MS-B |
| RS-232C data interface, 9-pin including PS/2 for connecting a PC, a barcode scanner or PC "QWERTY" keyboard | YDO01MS-P |
| RS-232C data interface, 25-pin for connection of Cubis® accessories | YDO01MS-R |
| Display cable 3 m for Cubis® MSA and MSU models, for separate setup of display and weighing unit (Installation by Sartorius Service or in factory [order VF4016]) | YCC01-MSD3 |
| Cable 3 m between weighing module and electronics module for Cubis® models with 0.01 mg \| 0.001 mg \| 0.0001 mg readability | YCC01-MSM3 |
| Installation display cable 3 m for Cubis® models, for separate setup of display and weighing unit | VF4016 |
| RS-232C connection cable to connect PC with 9-pin COM interface, length 1.5 m | 7357314 |
| SartoCollect software for data communication between balance and PC | YSC02 |
| Sartorius OPC Server for connecting all Sartorius Cubis® balances<br>Requires 32-bit Microsoft Windows 2000 or XP with current service packs.<br>(free download of a 30-day trial version from the Sartorius website) | |
| – Initial license | 6289OPC |
| – Each additional license within an order | 6289OPC-L |

### Displays and Input | Output Elements

| | |
|---|---|
| MSA control unit with color TFT graphic display and touch screen | YAC01MSA |
| MSE display unit with backlit LC display and tactile keys | YAC01MSE |
| MSU control unit with backlit b \| w graphic display and tactile navigation keys | YAC01MSU |
| Barcode reader with connection cable, 120 mm reading range | YBR03PS2 |
| Foot switch for printing, taring, or using function keys, selection via menu, incl. T connector | YFS01 |
| Infrared sensor for touch-free activation of functions (e.g., draft shield control) | YHS01MS |
| Hand switch for printing, taring, or using function keys, selection via menu, incl. T connector | YHS02 |
| Foot switch for the draft shield OPEN \| CLOSED functions (only in combination with DA and DI draft shield), taring and printing | YPE01RC |
| Additional display, LCD, figure size 13 mm, backlit | YRD03Z |
| 3-segment control display, red – green – red, for plus \| minus measurements, incl. T connector | YRD11Z |

| Pipette Calibration Hardware and Software | |
|---|---|
| Pipette calibration kit (hardware) for models with 0.1 mg and 0.01 mg readability<br>Consists of moisture trap and all required adapters | YCP04MS |
| Pipette calibration kit (hardware) for microbalance weighing modules 6.6S and 3.6P<br>Consists of moisture trap and all required adapters | VF988 |
| Pipette Tracker pipette calibration software. Software and user manual in English only. | YCP04-PT |
| Pipette Tracker Pro pipette calibration software, for use in regulated areas, networkable and validatable, according to the 21 CFR Part 11 regulations. Software and user manual in English only. | YCP04-PTPro |
| Documentation basis for validation (IQ, OQ) of Pipette Tracker PRO version.<br>All documents are in English only. | YCP04-VTK |

| Filter Weighing and Antistatic Accessories | |
|---|---|
| Antistatic weighing pan, diameter 130 mm, for weighing modules with a readability of 0.1 mg or 0.01 mg | YWP01MS |
| Filter weighing pan d 75 mm, for ultramicrobalance or microbalance models<br>(weighing modules 6.6S, 2.7S; only together with DF draft shield) | VF2562 |
| Filter weighing pan d 90 mm, for ultramicrobalance or microbalance models<br>(weighing modules 6.6S, 2.7S; only together with DF draft shield) | VF2880 |
| Ionization blower to eliminate electrostatic charges on sample containers and samples | YIB01-0DR |
| Stat-Pen ionization probe for discharging electrostatically charged samples and filters | YSTP01 |

| Special Applications | |
|---|---|
| Density determination kit for solids and liquids for weighing modules with a readability < 1 mg | YDK01MS |
| Density determination kit for solids and liquids for weighing modules with a readability of 1 mg | YDK02MS |
| Q-Grip, flexible holder for weigh-in containers and filters up to 120 mm diameter<br>(replaces the original weighing pan, for Cubis® models with 0.01 and 0.1 mg readability) | YFH01MS |
| Q-Grid grid weighing pan for Cubis® models with a readability of 10 mg or 100 mg for weighing in laboratory hoods, safety weighing cabinets or workbenches (reduced wind attack surface of the weighing pan; replaces the standard weighing pan) | YWP03MS |

| Weighing Tables | |
|---|---|
| Weighing table made from synthetic stone, with vibration dampening | YWT03 |
| Wall console | YWT04 |
| Weighing table made from wood with synthetic stone for precise, reliable measurements | YWT09 |

| Weighing Accessories | |
|---|---|
| Weighing scoop made from chrome nickel steel , 90 + 32 × 8 mm | 641214 |
| Aluminum weighing scoop, 4.5 mg (250 pieces) for ultramicrobalance and microbalance models | 6565-250 |
| Aluminum weighing scoop, 52 mg (50 pieces) for ultramicrobalance and microbalance models | 6566-50 |
| Support arm for 10/100 mg precision weighing modules for raising the control units MSE, MSU, MSA | YDH01MS |
| Support arm for precision weighing modules with 100 mg\|1 g readability and weighing capacity ≥ 20 kg for raising control units MSE, MSU, MSA | YDH02MS |
| Hook for below-balance weighing for precision weighing modules with 100 mg \| 1 g readability and weighing capacity ≥ 20 kg (not for verified models, CE mark) | 69EA0040 |

The brand name and logo for *Bluetooth*® wireless technology are are the property of Bluetooth SIG Inc. The use of this brand name and trademark by Sartorius is under license. Other brand names and trademarks are the property of their respective owners.

# Declarations of Conformity

**Weighing instruments for use in legal metrology: Council Directive 2009/23/EC "Non-automatic Weighing Instruments"**
This Directive regulates the determination of mass in legal metrology.
For the respective Declaration of Conformity for weighing instruments that have been verified by SARTORIUS for use as legal measuring instruments and that have an EC Type-Approval Certificate, see next page.

This Directive also regulates EC verification by the manufacturer, provided that an EC Type Approval Certificate has been issued and the manufacturer has been accredited by a notified body registered at the Commission of the European Community for performing such verification.

The legal basis for Sartorius to perform the EC verification is EC Directive No. 2009/23/EC for non-automatic weighing instruments. This Council Directive has been in effect since January 1, 1993 in the Internal Market. The further legal basis is founded on the Sartorius Quality Management System issued by the Metrology Department of the Regional -Administration Office of Lower Saxony, Germany ("Niedersächsisches Landesverwaltungsamt - Eichwesen") on February 15, 1993.

**"Installation" Service in Germany**
Our "Installation" service package provides a range of important services that guarantee your satisfaction with our work:
- Setup
- Operation
- Inspection
- Instruction

If the initial installation of the weighing instrument is to be carried out by Sartorius, please request this service from a customer service employee.

**Re-verification in Germany**
The validity of the verification ends when the next but one calendar year has elapsed. When the weighing instrument is used for the control of filling quantities according to the regulation on prepackaging, the verification ends when the next calendar year has elapsed. Re-verification should be requested in good time from the local Weights and Measures office. As appropriate, please observe all statutory amendments.

**Subsequent Verifications within the European Countries**
The expiration date of the verification depends on the national regulations of the country in which the weighing instrument is used. For information on verification and legal regulations currently applicable in your country, and to obtain the names of the persons to contact, please contact your local Sartorius office, dealer or service center.

Further information concerning verification can be obtained from our customer service centers.

sartorius

# EG-/EU-Konformitätserklärung
# EC / EU Declaration of Conformity

| | |
|---|---|
| Hersteller<br>*Manufacturer* | **Sartorius Lab Instruments GmbH & Co. KG**<br>**Weender Landstrasse 94 – 108, D-37075 Goettingen, Germany** |
| | erklärt in alleiniger Verantwortung, dass das Betriebsmittel<br>*declares under own responsibility that the equipment* |
| Geräteart<br>*Device type* | **Elektronische Semimikro-, Mikro-, Präzisions- und Analysenwaage**<br>*Electronic Semi-micro, Micro, Precision and Analytical Balance* |
| Baureihe<br>*Type series* | **MSA.....-...-.., MSE.....-...-.., MSU.....-...-..** |
| | in der von uns in Verkehr gebrachten Ausführung mit den grundlegenden Anforderungen der folgenden Europäischen Richtlinien übereinstimmt und die anwendbaren Anforderungen der im Anhang aufgelisteten harmonisierten Europäischen Normen erfüllt:<br>*in the form as delivered complies with the essential requirements of the following European Directives and meets the applicable requirements of the harmonized European Standards listed in the Annex:* |
| 2004/108/EG<br>*2004/108/EC* | Elektromagnetische Verträglichkeit<br>*Electromagnetic compatibility* |
| 2006/95/EG<br>*2006/95/EC* | Elektrische Betriebsmittel zur Verwendung innerhalb bestimmter Spannungsgrenzen<br>*Electrical equipment designed for use within certain voltage limits* |
| 2011/65/EU<br>*2011/65/EU* | Beschränkung der Verwendung bestimmter gefährlicher Stoffe in Elektro- und Elektronikgeräten (RoHS)<br>*Restriction of the use of certain hazardous substances in electrical and electronic equipment (RoHS)* |
| | Nur für Geräte mit Bluetooth® – Datenausgang Typ YBT03 / *Only for devices with Bluetooth® data output interface type YBT03:* |
| 1999/5/EG<br>*1999/5/EC* | Funkanlagen und Telekommunikationsendeinrichtungen und die gegenseitige Anerkennung ihrer Konformität<br>*Radio equipment and telecommunications terminal equipment and the mutual recognition of their conformity* |

Jahreszahl der CE-Kennzeichenvergabe / *Year of the CE mark assignment:* **13**

Sartorius Lab Instruments GmbH & Co. KG
Goettingen, 2013-09-17

i.V. | i.V.

Dr. Reinhard Baumfalk
Vice President R&D

Dr. Dieter Klausgrete
Head of International Certification Management

Diese Erklärung bescheinigt die Übereinstimmung mit den genannten EG- und EU-Richtlinien, ist jedoch keine Zusicherung von Eigenschaften. Bei einer mit uns nicht abgestimmten Änderung des Produktes verliert diese Erklärung ihre Gültigkeit. Die Sicherheitshinweise der zugehörigen Produktdokumentation sind zu beachten.

*This declaration certifies conformity with the above mentioned EC and EU Directives, but does not guarantee product attributes. Unauthorised product modifications make this declaration invalid. The safety information in the associated product documentation must be observed.*

SLI13CE002-00.de,en 1 / 2 34785-000-58 OP-1.113-fo2

sartorius

# EG-/EU-Konformitätserklärung
# EC / EU Declaration of Conformity

## Anhang / *Annex*

Liste der angewendeten harmonisierten Europäischen Normen
*List of the applied harmonized European Standards*

### Richtlinie 2004/108/EG / *Directive 2004/108/EC*

EN 61326-1:2006
Elektrische Mess-, Steuer-, Regel- und Laborgeräte - EMV- Anforderungen – Teil 1: Allgemeine Anforderungen
*Electrical equipment for measurement, control and laboratory use - EMC requirements – Part 1: General requirements*

### Richtlinie 2006/95/EG / *Directive 2006/95/EC*

EN 61010-1:2010
Sicherheitsbestimmungen für elektrische Mess-, Steuer-, Regel- und Laborgeräte – Teil 1: Allgemeine Anforderungen
*Safety requirements for electrical equipment for measurement, control, and laboratory use – Part 1: General requirements*

### Richtlinie 2011/65/EU / *Directive 2011/65/EU*

EN 50581:2012
Technische Dokumentation zur Beurteilung von Elektro- und Elektronikgeräten hinsichtlich der Beschränkung gefährlicher Stoffe
*Technical documentation for the assessment of electrical and electronic products with respect to the restriction of hazardous substances*

### Richtlinie 1999/5/EG / *Directive 1999/5/EC*

EN 301489-1 V1.9.1:2011

Elektromagnetische Verträglichkeit und Funkspektrumangelegenheiten (ERM) — Elektromagnetische Verträglichkeit (EMV) für Funkeinrichtungen und -dienste — Teil 1: Gemeinsame technische Anforderungen

*Electromagnetic compatibility and Radio spectrum Matters (ERM) — ElectroMagnetic Compatibility (EMC) standard for radio equipment and services — Part 1: Common technical requirements*

EN 301489-17 V1.3.2:2008

Elektromagnetische Verträglichkeit und Funkspektrumangelegenheiten (ERM) — Elektromagnetische Verträglichkeit für Funkeinrichtungen und -dienste — Teil 17: Spezifische Bedingungen für Breitbandübertragungssysteme im 2,4 GHz Band, Einrichtungen in lokalen Hochleistungs-Funknetzen (RLAN) im 5 GHz Band und Breitband-Datenübertragungssysteme im 5,8 GHz Band

*Electromagnetic compatibility and Radio spectrum Matters (ERM) — ElectroMagnetic Compatibility (EMC) standard for radio equipment — Part 17: Specific conditions for 2,4 GHz wideband transmission systems, 5 GHz high performance RLAN equipment and 5,8 GHz Broadband Data Transmitting Systems*

EN 300328 V1.8.1:2012

Elektromagnetische Verträglichkeit und Funkspektrumangelegenheiten (ERM) - Breitband-Übertragungssysteme - Datenübertragungsgeräte, die im 2,4-GHz-ISM-Band arbeiten und Breitband-Modulationstechniken verwenden - Harmonisierte EN, die die wesentlichen Anforderungen nach Artikel 3.2 der R&TTE-Richtlinie enthält

*Electromagnetic compatibility and Radio spectrum Matters (ERM) - Wideband transmission systems - Data transmission equipment operating in the 2,4 GHz ISM band and using wide band modulation techniques - Harmonized EN covering the essential requirements of article 3.2 of the R&TTE Directive*

• • • • • •

SLI13CE002-00.de,en 2 / 2 34785-000-58 OP-1.113-fo2

**EG-Konformitätserklärung - 2009/23/EG**
**EC Declaration of Conformity - 2009/23/EC**
**Declaración de Conformidad CE - 2009/23/CE**
**Déclaration de conformité CE - 2009/23/CE**
**Dichiarazione di conformità CE - 2009/23/CE**

**Sartorius Lab Instruments GmbH & Co. KG, Weender Landstrasse 94 – 108, D-37075 Goettingen, Germany**
erklärt in alleiniger Verantwortung, dass die elektromechanischen nichtselbsttätigen Waagen
declares under its own responsibility that the electromechanical non-automatic weighing instruments
declara, bajo su propia responsabilidad, que los instrumentos de pesaje electromécanicos de funcionamiento no automático
déclare en engageant sa propre responsabilité que les instruments de pesage électromécaniques à fonctionnement non automatique
dichiara sotto la propria responsabilità che gli strumenti per pesare a funzionamento non automatico elettromeccanici

| Modell<br>Model<br>Modelo<br>Modèle<br>Modello | Bauart<br>Type<br>Tipo de construcción<br>N° de série<br>Numero di serie | Genauigkeitsklasse<br>Accuracy class<br>Clase de precisión<br>Classe de précision<br>Classe di precisione | EG-Bauartzulassung<br>EC type-approval certificate<br>Certificado de aprobación CE de modelo<br>Certificat d'approbation CE de type<br>Certificato di omologazione CE del tipo |
|---|---|---|---|
| MS...-.CE | MSX | (I) | D09-09-015 |
| GBB...-.CE | MSX | (I) | D09-09-015 |
| MS...-.CE | MSX | (II) | D09-09-015 |

Typ Wägemodul / Type of weighing module / Tipo de módulo de pesaje / Type du module de pesage / Tipo di modulo de pesatura:
SA EA, SB EA, SC EA, SD EE, SE EA, SF EA, SB EB, SC EB, SC EC, SG EE, SH EE, SI EF, SJ EF
Typ Anzeige und Bedienterminal / Type of indicating and operator terminal / Tipo de unidad de indicación y manejo /
Type de l'unité d'affichage et de commande / Tipo dell'unità del display e di controllo: YAC01MSA, YAC01MSE, YAC01MSU

in der von uns in Verkehr gebrachten Ausführung mit den grundlegenden Anforderungen der folgenden Europäischen Richtlinie übereinstimmen und die anwendbaren Anforderungen folgender harmonisierter Europäischer Norm einhalten:
in the design we have placed on the market comply with the basic requirements of the following European Directive and meet the applicable requirements of the harmonized European Standard listed below:
en el diseño que hemos puesto en el mercado cumplen con los requisitos básicos de la Directiva Europea siguiente y satisfacen las prescripciones aplicables de la siguiente Norma Europea armonizada:
basés sur la conception du produit que nous avons mis sur le marché sont conformes aux exigences fondamentales de la directive européenne suivante et répondent aux exigences applicables de la norme harmonisée européenne énumérée ci-dessous:
sulla base della progettazione del prodotto che abbiamo immesso sul mercato sono conformi ai requisiti essenziali della seguente direttiva europea e soddisfano le prescrizioni applicabili della norma europea armonizzata elencata di seguito:

| | |
|---|---|
| Richtlinie 2009/23/EG | Nichtselbsttätige Waagen |
| Directive 2009/23/EC | Non-automatic weighing instruments |
| Directiva 2009/23/CE | Instrumentos de pesaje de funcionamiento no automático |
| Directive 2009/23/CE | Instruments de pesage à fonctionnement non automatique |
| Direttiva 2009/23/CE | Strumenti per pesare a funzionamento non automatico |
| EN 45 501:1992 | Metrologische Aspekte Nichtselbsttätiger Waagen<br>Metrological aspects of non-automatic weighing instruments<br>Aspectos metrológicos de los instrumentos de pesar de funcionamiento no automático<br>Aspects métrologiques des instruments de pesage à fonctionnement non automatique<br>Aspetti metrologici di strumenti per pesare a funzionamento non automatico |

Fundstelle der Richtlinie und Norm: Server der EU / Source of the directive and the standard: EU server / Fuente de la Directiva y Norma: servidor eur-lex.europa.eu/ Source de la directive et de la norme: serveur UE / Origine della direttiva e la norma: server UE: eur-lex.europa.eu

Diese Konformitätserklärung gilt nur für die Richtlinie 2009/23/EG wenn die folgenden Angaben auf dem Kennzeichnungsschild vorhanden sind:
This Declaration of Conformity is valid for Directive 2009/23/EC only if the following inscriptions are present on the data ID plate:
Esta Declaración de Conformidad es válida para la Directiva 2009/23/CE sólo si las siguientes inscripciones figuran en la placa de características:
Cette déclaration de conformité CE est valide pour la Directive 2009/23/CE uniquement si les inscriptions suivantes figurent sur la plaque de données :
Questa Dichiarazione di Conformità CE è valida per la direttiva 2009/23/CE solo se le iscrizioni seguenti sono presenti sulla targhetta di supporto:

CE 13 0111 M

Beispiel (Jahreszahl und Nummer der benannten Stelle können variieren)
Example (date/year and number of the notified body may vary)
Ejemplo (El año y el número de lugar mencionado pueden variar)
Exemple (la date/l'année et le numéro de l'organisme notifié peuvent varier)
Esempio (anno e numero del punto menzionato possono variare)

Die Hinweise der zugehörigen Produktdokumentation sind zu beachten / The information in the associated product documentation must be observed / Debe observarse la información contenida en la documentación associada del producto / Les informations contenues dans la documentation associée du produit doivent être respectées / Le informazioni contenute nella documentazione associata al prodotto devono essere osservate.

Sartorius Lab Instruments GmbH & Co. KG
Goettingen, 2013-09-16

i. V. R. Baumfalk

Dr. Reinhard Baumfalk
Vice President R&D

i. V. J. Rehwald

Jürgen Rehwald
Head of the Production Department

P106desfip04.doc 34785-000-58 LOP-3.225_an2e_2005.06.09.doc

# Physikalisch-Technische Bundesanstalt

**Braunschweig und Berlin**

## EG-Bauartzulassung

*EC Type-approval Certificate*

| | |
|---|---|
| Zulassungsinhaber:<br>*Issued to:* | Sartorius Lab Instruments GmbH & Co. KG<br>Weender Landstr. 94-108<br>37075 Göttingen |
| Rechtsbezug:<br>*In accordance with:* | Richtlinie 2009/23/EG vom 23. April 2009 über nichtselbsttätige Waagen (ABl. L 122 S. 6). *Directive 2009/23/EC of 23 April 2009 on non-automatic weighing instruments (OJ L 122 p. 6)* |
| Bauart:<br>*In respect of:* | Nichtselbsttätige elektromechanische Präzisionswaage<br>*Non-automatic electromechanical high accuracy weighing instrument* |
| Typ:<br>*Type:* | MSX |
| Zulassungsnummer:<br>*Approval No.:* | **D09-09-015 6. Revision** |
| Gültig bis:<br>*Valid until:* | 18.06.2019 |
| Anzahl der Seiten:<br>*Number of pages:* | 28 |
| Geschäftszeichen:<br>*Reference No.:* | PTB-1.12-4063385 |
| Benannte Stelle:<br>*Notified Body:* | 0102 |

Zertifizierung:
*Certification:*

Im Auftrag
*On behalf of PTB*

*Dr. Oliver Mack*

Braunschweig, 05.09.2013

Siegel
*Seal*

PHYSIKALISCH-TECHNISCHE BUNDESANSTALT 95

Bewertung:
*Evaluation:*

Im Auftrag
*On behalf of PTB*

*Dipl.-Ing. K. Schulz*

EG-Bauartzulassungen ohne Unterschrift und Siegel haben keine Gültigkeit. Diese EG-Bauartzulassung darf nur unverändert weiterverbreitet werden. Auszüge bedürfen der Genehmigung der Physikalisch-Technischen Bundesanstalt.
*EC Type-approval Certificates without signature and seal are not valid. This EC Type-approval Certificate may not be reproduced other than in full. Extracts may be taken only with the permission of the Physikalisch-Technische Bundesanstalt.*

Die Hauptmerkmale, Zulassungsbedingungen und Auflagen sind in der Anlage enthalten, die Bestandteil der EG-Bauartzulassung ist. *The principal characteristics, the approval conditions and the special conditions, if any, are set out in the Annex which forms an integral part of the EC Type-approval Certificate.*

R3-0023

## Plates and Markings

Indicating and operator terminals

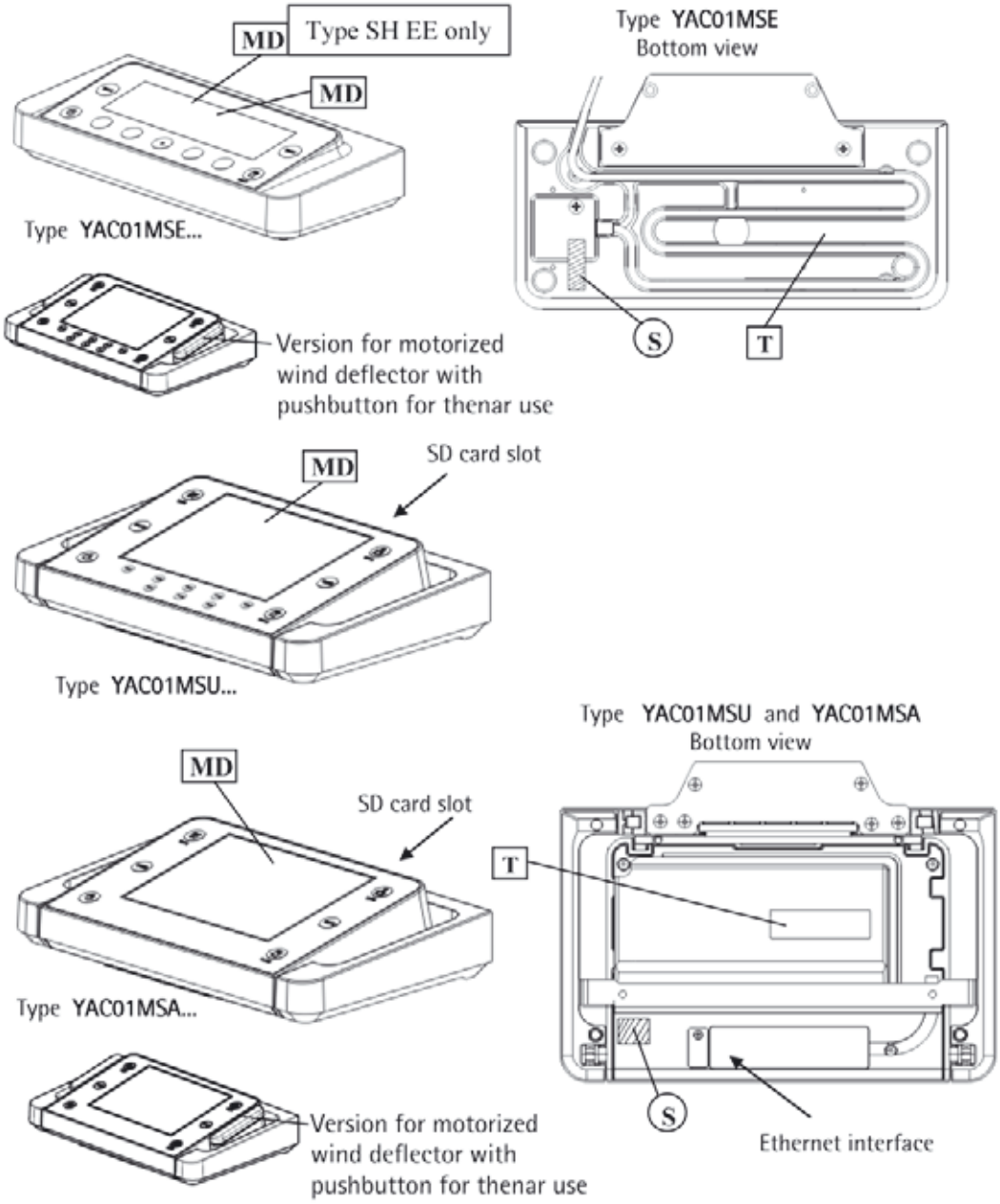


T Plate with model designation (terminal)

S Protective mark (self-adhesive mark or seal)

MD Metrological data Max, Min, e and if existent d of the active weighing range

PPCU110913e

Type weighing instrument: MSX
EC type-approval certificate: D09-09-015

Weighing modules

**SA EA, SB EA, SB EB, SC EA, SC EB, SC EC, SE EA, SF EA**

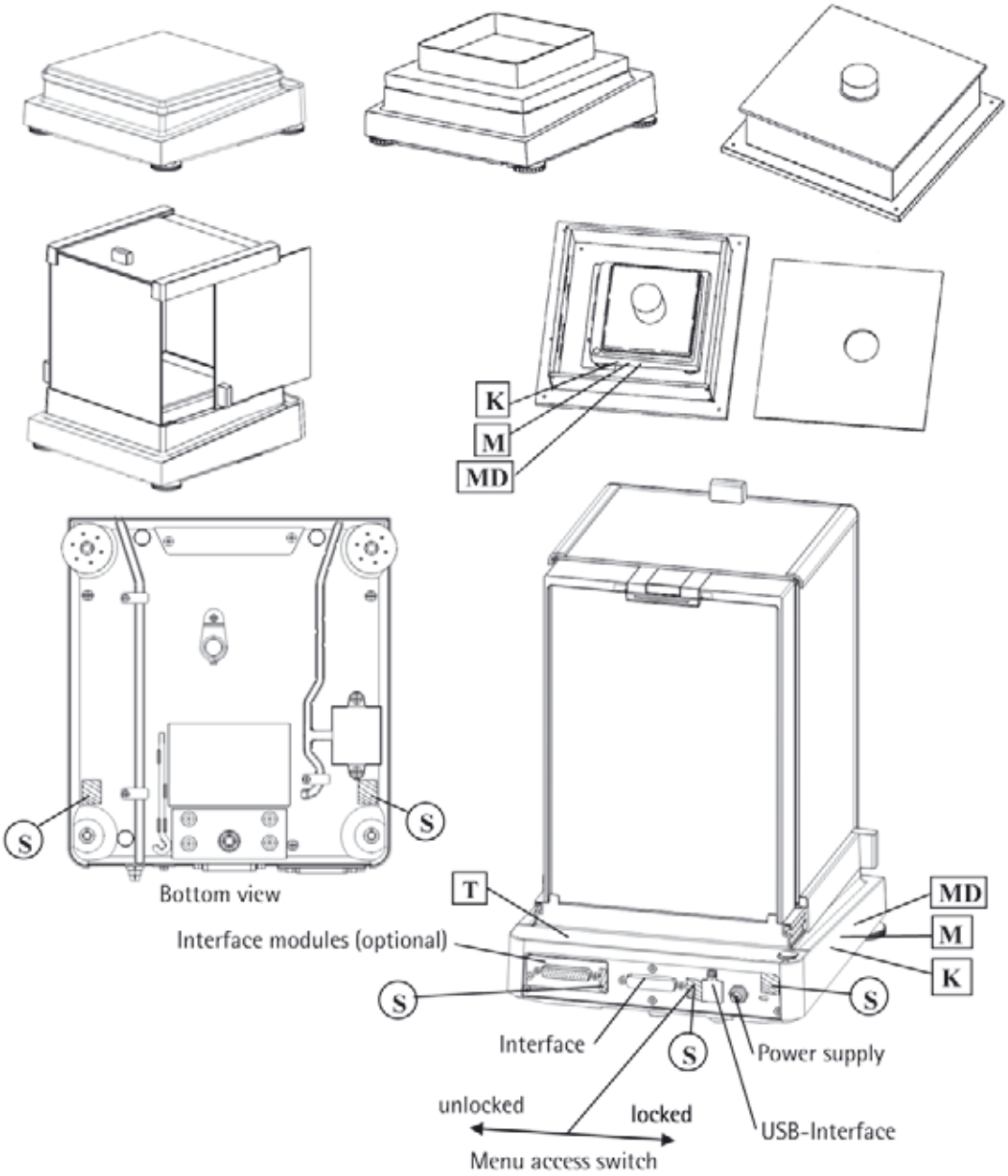


| | |
|---|---|
| K | Descriptive plate with CE-sign |
| M | Mark for EC verification (green metrology sticker) |
| S | Protective mark (self-adhesive mark or seal) |
| MD | Metrological data Max, Min, e and if existent d |
| T | Plate with model designation (weighing module) |

PPCU110913e

Type weighing instrument: MSX
EC type-approval certificate: D09-09-015

Weighing modules
**SD EE**

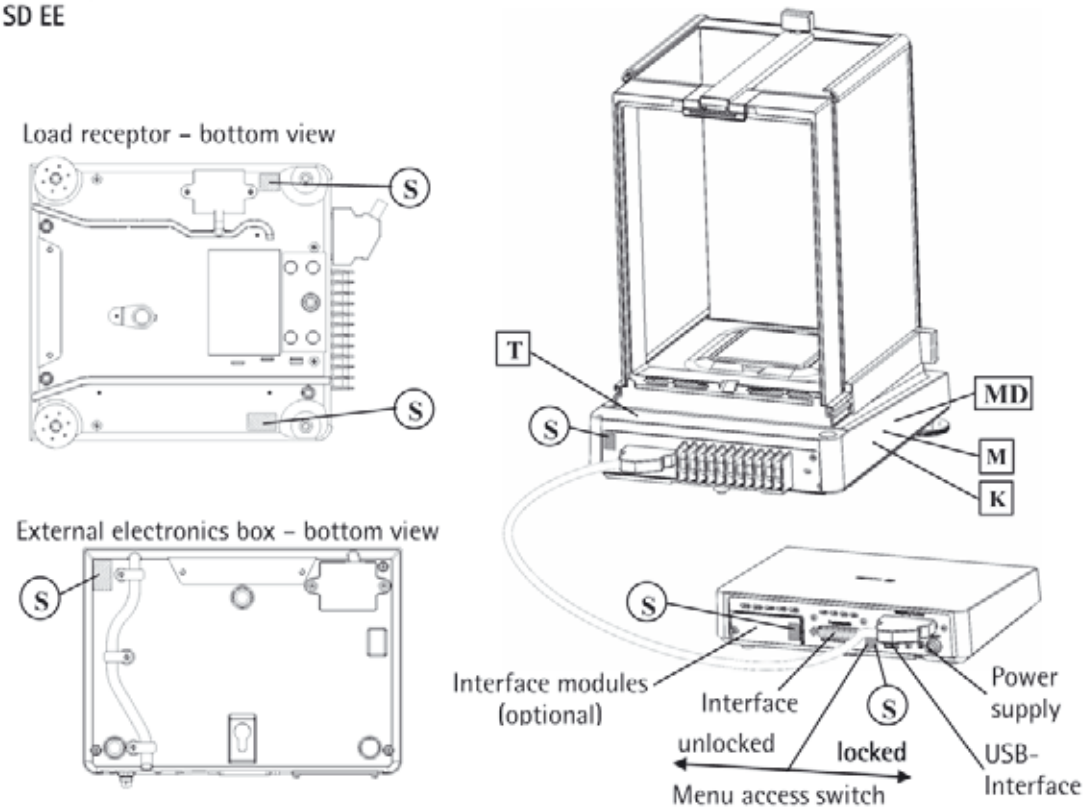


Weighing modules
**SG EE, SH EE**

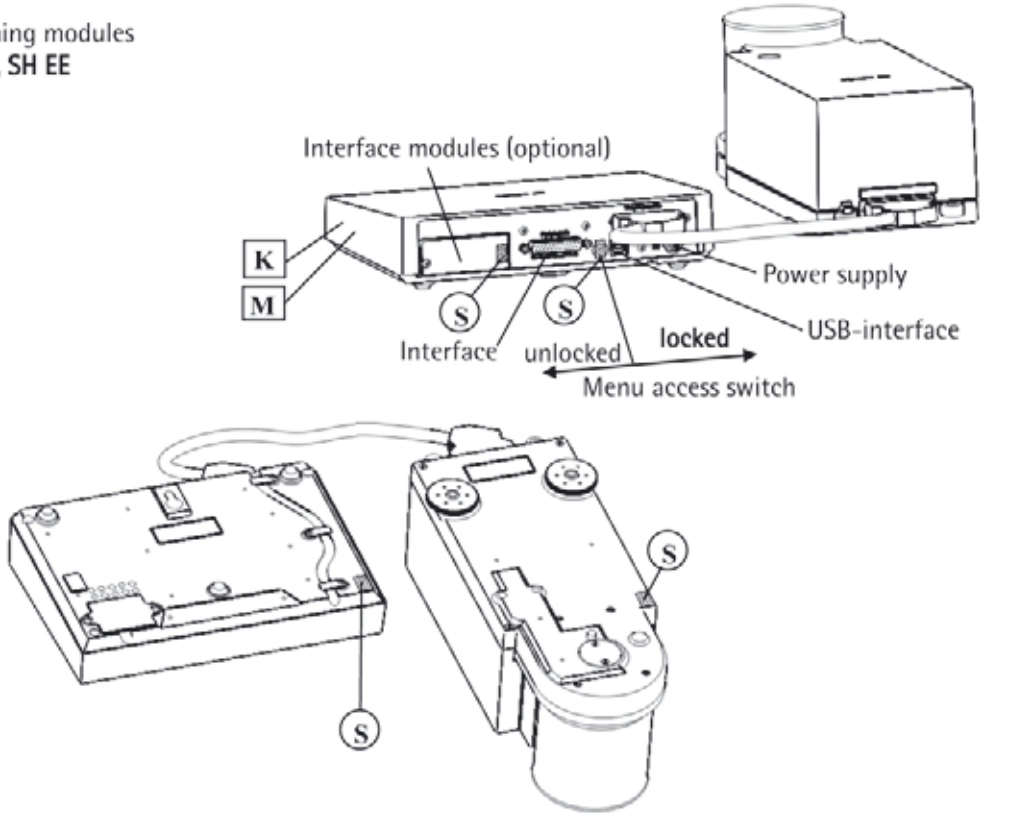


PPCU110913e

Type weighing instrument: MSX
EC type-approval certificate: D09-09-015

Weighing modules
**SI EF, SJ EF**

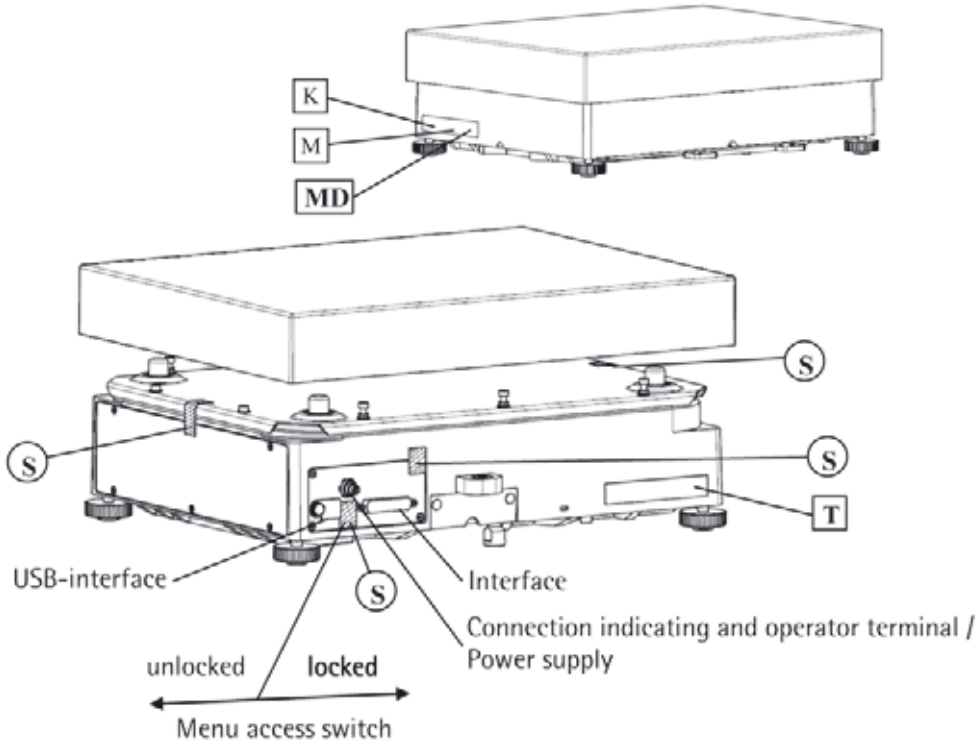


K Descriptive plate with CE-sign

M Mark for EC verification (green metrology sticker)

S Protective mark (self-adhesive mark or seal)

MD Metrological data Max, Min, e and if existent d

T Plate with model designation (weighing module)

PPCU110913e

Type weighing instrument: MSX
EC type-approval certificate: D09-09-015

## Type MSX

Indicating and operator terminals: YAC01MSE, YAC01MSA, YAC01MSU
Weighing modules: SA EA, SB EA, SB EB, SC EA, SC EB, SC EC, SD EE, SG EE, SH EE, SI EF, SJ EF

Example of descriptive plate on a weighing instrument already verified K

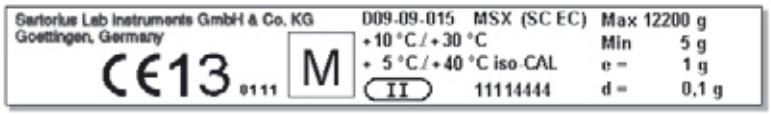


Example of plate with model designation ( weighing module ) T

Example of plate with model designation ( terminal ) T

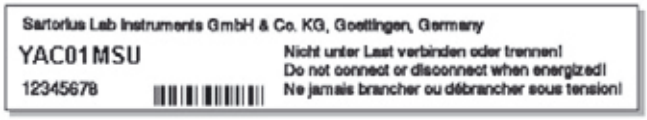


PPCU110913e

Type weighing instrument: MSX
EC type-approval certificate: D09-09-015

Sartorius Lab Instruments GmbH & Co. KG
Weender Landstrasse 94–108
37075 Goettingen, Germany

Phone +49.551.308.0
Fax +49.551.308.3289
www.sartorius.com

Copyright by Sartorius,
Goettingen, Germany.
All rights reserved. No part of this publication may be reprinted or translated in any form or by any means without the prior written permission of Sartorius.
The status of the information, specifications and illustrations in this manual is indicated by the date given below.
Sartorius reserves the right to make changes to the technology, features, specifications and design of the equipment without notice.

Status:
November 2013,
Sartorius Lab Instruments GmbH & Co. KG,
Goettingen, Germany

Printed in the EU on paper bleached without chlorine
W_ Cubis Anw-Handbuch MSA · KT
Publication No.: WMS6005-e131109