# Manual

# Cutting Mill SM200

Translation

© Retsch GmbH, 42781 Haan, Retsch-Allee 1-5, Germany | 14.01.2019 Version 0005

**Copyright**

© Copyright by
Retsch GmbH
Retsch-Allee 1-5
42781 Haan
Germany

# Table of Contents


**1 Notes on the Manual ... 5**
1.1 Explanations of the Safety Instructions ... 6
1.2 General Safety Instructions ... 7
1.3 Repairs ... 8

**2 Confirmation ... 9**
**3 Packaging, Transport and Installation ... 10**
3.1 Packaging ... 10
3.2 Transport ... 10
3.3 Temperature fluctuations and condensed water ... 10
3.4 Conditions for the Installation Site ... 10
3.5 Electrical Connection ... 11
3.6 Type Plate Description ... 12
3.7 Removing the Transportation Aid ... 13
3.8 Mounting the Feed Hopper ... 14
3.8.1 Removing the Transport Safeguard ... 14
3.8.2 Mounting the Feed Hopper ... 15
3.9 Installation of the Device ... 16
3.10 Height adjustment and alignment of the support structure ... 17

**4 Technical Data ... 19**
4.1 Use of the Device for the Intended Purpose ... 19
4.2 Emissions ... 20
4.3 Degree of Protection ... 20
4.4 Motor rotation speed ... 20
4.5 Receptacle Volume ... 20
4.6 Rated Power ... 20
4.7 Dimensions and Weight ... 20
4.8 Required Floor Space ... 21

**5 Operating the Device ... 22**
5.1 Views of the Instrument ... 22
5.2 Overview table of the parts of the device ... 25
5.3 Operating elements and displays ... 26
5.4 Overview Table of the Operating Elements and the Display ... 26
5.5 Opening and Closing of the Device ... 27
5.6 Mounting the bottom sieve ... 27
5.7 Replacing the rotor ... 27
5.7.1 Removing the Rotor ... 28
5.7.2 Inserting the Rotor ... 28
5.8 Inserting the filter unit and collecting receptacle ... 29
5.9 Starting the grinding process ... 29
5.10 Stopping the grinding process ... 30

**6 Mode of Operation of Feed Hopper ... 31**
**7 Assembling and using the cyclone ... 32**
7.1 Cyclone assembly ... 32
7.1.1 Inserting the wide mouth bottle adapter ... 36

**8 Cleaning and service ... 37**
8.1 Adjusting the cutting bars ... 37

**9 Fault messages ... 40**
**10 Disposal ... 41**
**11 Index ... 42**

# 1 Notes on the Manual

This operating manual is a technical guide on how to operate the device safely and it contains all the information required for the areas specified in the table of contents. This technical documentation is a reference and instruction manual. The individual chapters are complete in themselves.
Familiarity (of the respective target groups defined according to area) with the relevant chapters is a precondition for the safe and appropriate use of the device.
This operating manual does not contain any repair instructions. If faults arise or repairs are necessary, please contact your supplier or get in touch with Retsch GmbH directly.
Application technology information relating to samples to be processed is not included but can be read on the Internet on the respective device's page at www.retsch.com.

**Changes**

Subject to technical changes.

**Copyright**

Disclosure or reproduction of this documentation, use and disclosure of its contents are only permitted with the express permission of Retsch GmbH.
Infringements will result in damage compensation liability.

## 1.1 Explanations of the Safety Instructions

In this Operating Manual we give you the following safety warnings

**Serious injury** may result from failing to heed these safety warnings. We give you the following warnings and corresponding content.

**WARNING**

**Type of danger / personal injury**
Source of danger

– Possible consequences if the dangers are not observed.
• **Instructions on how the dangers are to be avoided.**

We also use the following signal word box in the text or in the instructions on action to be taken:
**WARNING**

**Moderate or mild injury** may result from failing to heed these safety warnings. We give you the following warnings and corresponding content.

**CAUTION**

**Type of danger / personal injury**
Source of danger

– Possible consequences if the dangers are not observed.
• **Instructions on how the dangers are to be avoided.**

We also use the following signal word box in the text or in the instructions on action to be taken:
**CAUTION**

In the event of possible **property damage** we inform you with the word “Instructions” and the corresponding content.

*NOTICE*

**Nature of the property damage**
Source of property damage

– Possible consequences if the instructions are not observed.
• **Instructions on how the dangers are to be avoided.**

We also use the following signal word in the text or in the instructions on action to be taken:
*NOTICE*

## 1.2 General Safety Instructions

**CAUTION**

**Read the Operating Manual**
Non-observance of these operating instructions

- The non-observance of these operating instructions can result in personal injuries.
- **Read the operating manual before using the device.**
- **We use the adjacent symbol to draw attention to the necessity of knowing the contents of this operating manual.**

**Target group** : All persons concerned with the machine in any form
This machine is a modern, high performance product from Retsch GmbH and complies with the state of the art. Operational safety is given if the machine is handled for the intended purpose and attention is given to this technical documentation.

You, as the owner/managing operator of the machine, must ensure that the people entrusted with working on the machine:

- have noted and understood all the regulations regarding safety,
- are familiar before starting work with all the operating instructions and specifications for the target group relevant for them,
- have easy access always to the technical documentation for this machine,
- and that new personnel before starting work on the machine are familiarised with the safe handling of the machine and its use for its intended purpose, either by verbal instructions from a competent person and/or by means of this technical documentation.

Improper operation can result in personal injuries and material damage. You are responsible for your own safety and that of your employees.
Make sure that no unauthorised person has access to the machine.

**CAUTION**

**Changes to the machine**

- Changes to the machine may lead to personal injury.
- **Do not make any change to the machine and use spare parts and accessories that have been approved by Retsch exclusively.**

*NOTICE*

**Changes to the machine**

- The conformity declared by Retsch with the European Directives will lose its validity.
- You lose all warranty claims.
- **Do not make any change to the machine and use spare parts and accessories that have been approved by Retsch exclusively.**

## 1.3 Repairs

This operating manual does not contain any repair instructions. For your own safety, repairs may only be carried out by Retsch GmbH or an authorized representative or by Retsch service engineers.

**In that case please inform:**

| |
|---|
| The Retsch representative in your country |
| Your supplier |
| Retsch GmbH directly |

**Your Service Address:**

| |
|---|
| |

# 2 Confirmation

This operating manual contains essential instructions for operating and maintaining the device which must be strictly observed. It is essential that they be read by the operator and by the qualified staff responsible for the device before the device is commissioned. This operating manual must be available and accessible at the place of use at all times.

The user of the device herewith confirms to the managing operator (owner) that (s)he has received sufficient instructions about the operation and maintenance of the system. The user has received the operating manual, has read and taken note of its contents and consequently has all the information required for safe operation and is sufficiently familiar with the device.
As the owner/managing operator you should for your own protection have your employees confirm that they have received the instructions about the operation of the machine.

I have read and taken note of the contents of all chapters in this operating manual as well as all safety instructions and warnings.

| **User** |
| --- |
| |
| Surname, first name (block letters) |
| Position in the company |
| Signature |

| **Service technician or operator** |
| --- |
| |
| Surname, first name (block letters) |
| Position in the company |
| Place, date and signature |

# 3 Packaging, Transport and Installation

## 3.1 Packaging

The packaging has been adapted to the mode of transport. It complies with the generally applicable packaging guidelines.

*NOTICE*

**Storage of packaging**

– In the event of a complaint or return, your warranty claims may be endangered if the packaging is inadequate or the machine has not been secured correctly.

• **Please keep the packaging for the duration of the warranty period.**

## 3.2 Transport

*NOTICE*

**Transport**

– Mechanical or electronic components may be damaged.

• **The machine may not be knocked, shaken or thrown during transport.**

## 3.3 Temperature fluctuations and condensed water

*NOTICE*

**Temperature fluctuations**

The machine may be subject to strong temperature fluctuations during transport (e.g. aircraft transport)

– The resultant condensed water may damage electronic components.

• **Protect the machine from condensed water.**

## 3.4 Conditions for the Installation Site

Ambient temperature: 5°C to 40°C

*NOTICE*

**Ambient temperature**

– Electronic and mechanical components may be damaged and the performance data alter to an unknown extent.

• **Do not exceed or fall below the permitted temperature range of the machine (5°C to 40°C / ambient temperature).**

Atmospheric humidity:
Maximum relative humidity 80% at temperatures up to 31°C, decreasing linearly up to 50% relative humidity at 40°C

*NOTICE*

**Atmospheric humidity**

– Electronic and mechanical components may be damaged and the performance data alter to an unknown extent.

- **Do not exceed the admissible range for atmospheric humidity.**

## 3.5 Electrical Connection

**WARNING**

When connecting the power cable to the mains supply, use an external fusethat complies with the regulations applicable to the place of installation .

- Please check the type plate for details on the necessary voltage and frequency for the device.
- Make sure the levels agree with the existing mains power supply.
- Use the supplied connection cable to connect the device to the mains power supply.

*NOTICE*

**Electrical connection**

– Mechanical or electronic components may be damaged.

- **Please observe the information on the type plate.**

## 3.6 Type Plate Description

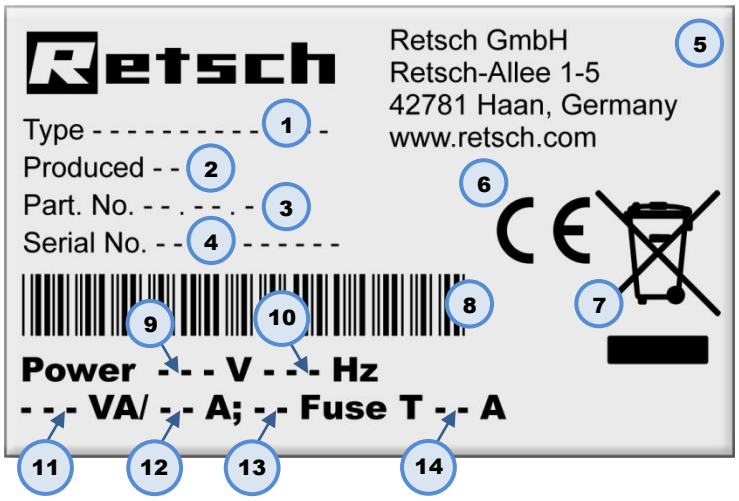


Fig. 1: Type plate lettering

1 Device designation
2 Year of production
3 Part number
4 Serial number
5 Manufacturer's address
6 CE marking
7 Disposal label
8 Bar code
9 Power version
10 Mains frequency
11 Capacity
12 Amperage
13 Number of fuses
14 Fuse type and fuse strength

In the case of questions please provide the device designation (1) or the part number (3) and the serial number (4) of the device.

## 3.7 Removing the Transportation Aid

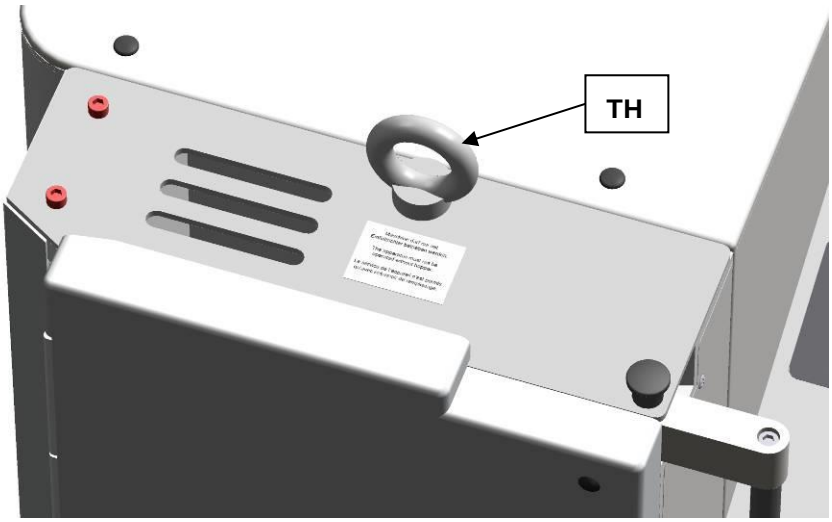


Fig. 2: Removing the transport aid
Lift the device only by the transport aid (TH). The weight of the device is approx. 90 kg. Choose a safe lifting sling that is approved for this weight.
Keep the eye bolt(TH) for transport again at a later date.
The eye bolt must be removed before the hopper is assembled.

## 3.8 Mounting the Feed Hopper

**WARNING**

1.W0004

**Risk of injury to skin and hands**
Fast rotating cutting blade

– There is a risk of injuring hands, fingers and skin.
- **Never operate the device without a feed hopper.**

*NOTICE*

**Transport safeguard**

– Components may be damaged.
- **Operate the machine only without the transport safeguard or transport the machine only with transport safeguard.**

### 3.8.1 Removing the Transport Safeguard

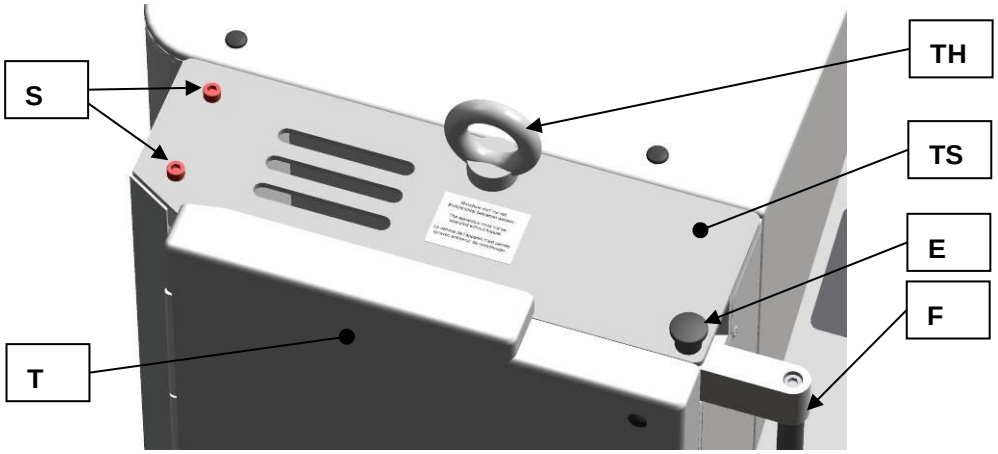


Fig. 3: Removing the transport aid

- Remove the transport aid (TH).
- Unlock the grinding chamber door, by pulling the mini detent pin (E) upwards and pressing the handle of the door latch (F) backwards.
- Open the grinding chamber door (T).
- Remove the two locking screws (S).

*NOTE*

Keep the transport safeguard (TS) for transport at a later date.

### 3.8.2 Mounting the Feed Hopper

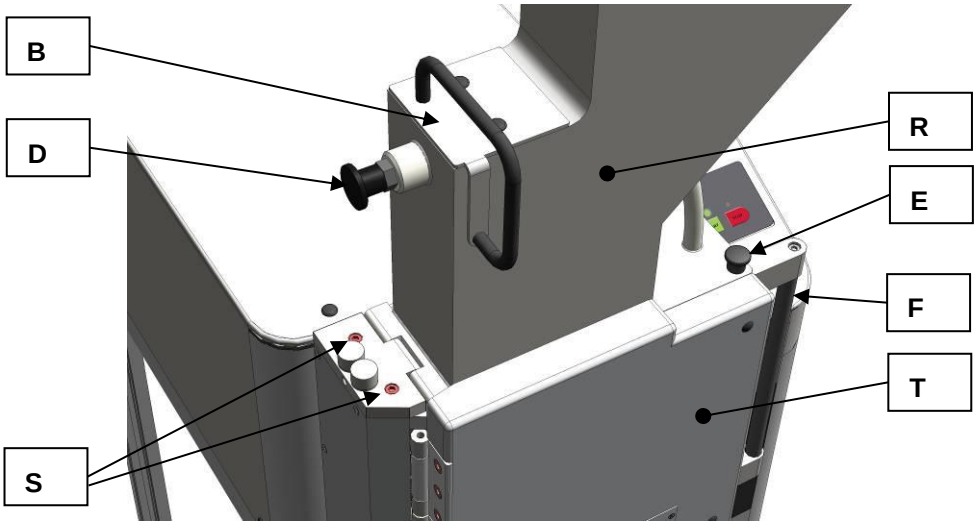


Fig. 4: Mounting the feed hopper

- Push the handle of the door latch (F) backwards.
- Open the grinding chamber door (T).
- Pull the plunger (B) into the upper latching position.
- Place the feed hopper (R) on the device. (see diagram)

**⚠ CAUTION**

Until the feed hopper (R) is secured by two socket-head screws, there is a risk of it falling out of the device.

- Release the detent pin bolt (D) on the plunger (B).
- Push the plunger downwards.
    - Screw the two provided socket-head screws (S) through the hinge on the feed hopper into the enclosure.
- At first, tighten the screws only slightly.
- Close the grinding chamber door.
    - Pull the handle on the door latch (F) forwards until the mini detent pin (E) engages.
    - Adjust the feed hopper until the plunger can be moved upwards and downwards easily without jamming.
    - Tighten the two socket-head screws securely. (10 Nm)
    - Check again if the plunger moves upwards and downwards easily without jamming.
    - Put the two protective caps (SK) onto the screws (S).

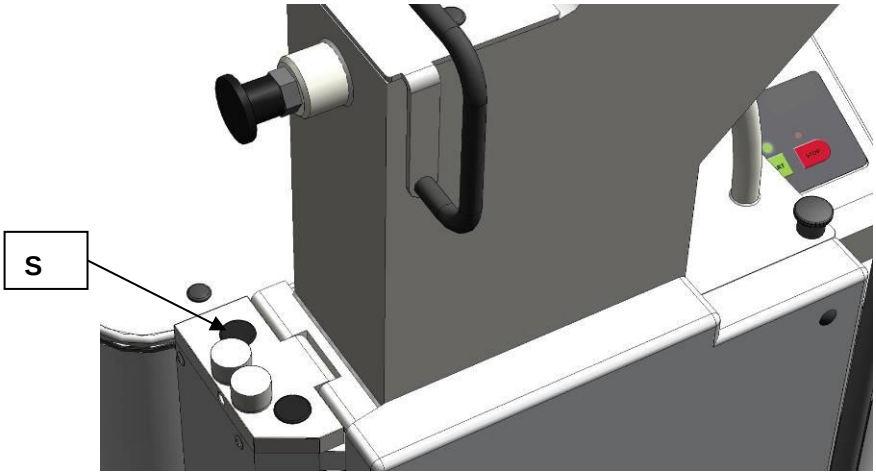


Fig. 5: Putting on the protective caps

*NOTE*

When new, the grinding chamber door and the handle on the door latch are somewhat difficult to move.

## 3.9 Installation of the Device

Installation height: maximum 2000 m above sea level

*NOTE*

**Installation**

– Depending on the operating status of the mill, there may be slight vibrations.

• **Place the mill on an even, flat and balanced supporting surface only. The supporting surface must be stable and must not vibrate.**

*NOTICE*

**Installation of the machine**

– It must be possible to disconnet the machine from the mains at any time.

• **Install the machine such that the connection for the mains cable is easily accessible.**

## 3.10 Height adjustment and alignment of the support structure

The height of two wheels on the support structure can be changed to compensate for an uneven surface and for the optimal alignment of the machine.

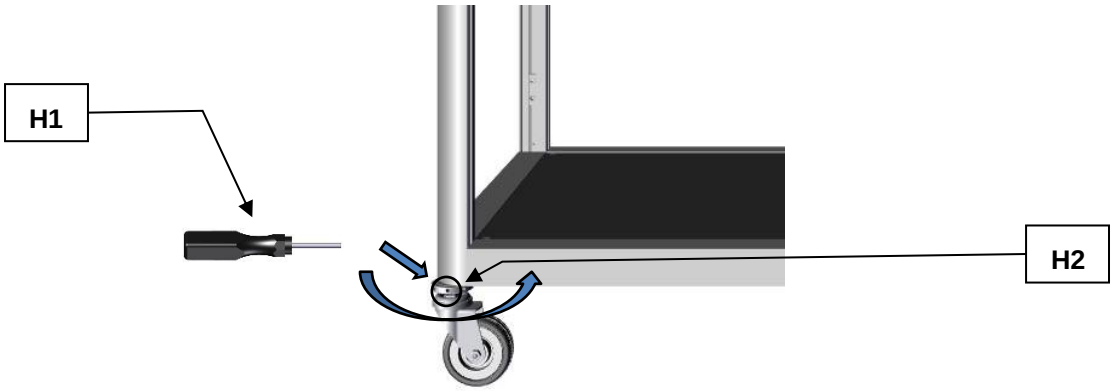


Fig. 6: Adjusting the height of the support structure

| No. | Designation |
|---|---|
| H1 | Locking pin |
| H2 | Adjusting nut |

Proceed as follows to adjust the height of the support structure:

- Place the supplied locking pin (**H1**) into an opening of the adjusting nut (**H2**) on the back wheel of the support structure.
- Use the locking pin (**H1**) as a lever and alter the height of the support structure by means of horizontal lever movements until the desired height has been reached.
- Repeat the process with the other wheel until the support structure has been aligned almost horizontally.

ⓘ When aligning the support structure, a backwards tilt of approx. 1-2° is recommended for an ideal operating function.

ⓘ We recommend using a spirit level to check the ideal incline of the support structure.

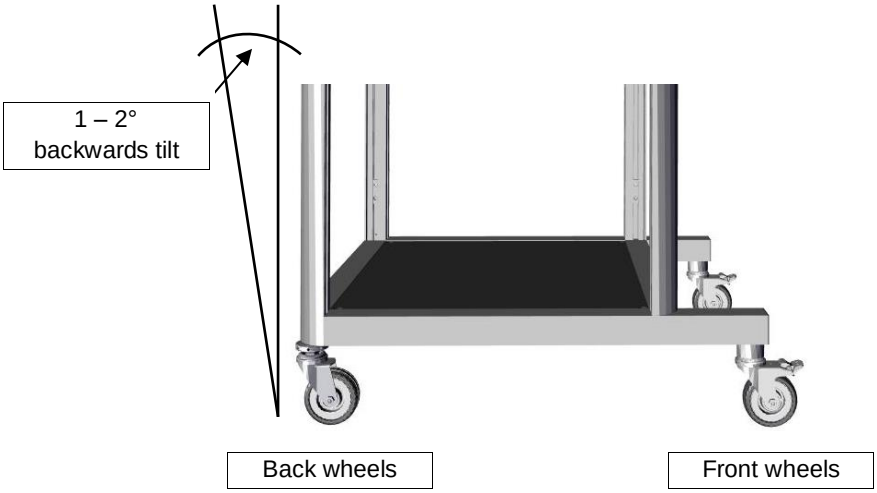


Fig. 7: Optimal alignment

# 4 Technical Data

## 4.1 Use of the Device for the Intended Purpose

**Target group:** Owners/managing operators, operators
**Machine type designation:** SM 200

This heavy-duty cutting mill serves to grind flexible, hard-ductile and fibrous products and product mixtures in batches or continuously. It is fundamentally not designed for grinding wet or moist materials. The special shape of the cutting tools in conjunction with the drive enables a fast, efficient grinding without adversely affecting the material to be ground.

**Special features**
The new heavy-duty cutting mill is convincing in difficult size reduction tasks where other cutting mills fail. The device allows a particularly effective preliminary size reduction of heterogeneous material mixes, such as waste or electronic components. Analytical fineness is usually attained in one step. The cutting mill is used successfully for a great variety of other materials also, whereby the sample material is only heated to a very low temperature and so the mill is also suitable for grinding temperature-sensitive materials.

The large selection of sieves, hoppers and collecting vessels allow adaptations to individual tasks.

- fast, gradual size reduction by 18 cutting plates arranged in a helical pattern along the circumference of the rotor
- parallel section rotor
- cutting tools made of high-quality materials
- high level of operating convenience due to central lock and operator panel
- consistent operational reliability in all user-relevant equipment components
- versatility in use due to a variety of devices and a large number of accessories
- powerful size reduction owing to a high-torque 2.2-KW motor
- optimised cutting effect by double-acting cutting bars
- very fast cleaning thanks to hinged enclosure with smooth surfaces and push-fit rotor
- defined final fineness due to bottom sieves with aperture sizes 0.25 - 20 mm

*NOTICE*

**Area of use of the machine**

– This machine is a laboratory machine designed for 8-hour single-shift operation.

• **This machine may not be used as a production machine nor is it intended for continuous operation.**

## 4.2 Emissions

**CAUTION**

**Damage to hearing**
The level of noise can be high depending on the type of material, the knife used, the speed set and the duration of the grinding process.

- Noise that is excessive in terms of level and duration can cause impaired or permanently damaged hearing.
- **Ensure suitable sound-proofing measures or wear hearing protection.**

Noise measurementin accordance with DIN 45635-31-01-KL3.
Immission at 1-m spacing:
- approx. 66 dB (A) at idle speed

During size reduction, depending on the sample material:
- approx. 75 to 92 dB (A) with peaks of up to 98 dB

## 4.3 Degree of Protection

– IP54

## 4.4 Motor rotation speed

The rated speed of the motoris 1500 rpm.

## 4.5 Receptacle Volume

The receptacle volumeis < 5 l and is expandable by accessories to up to 26 l.

## 4.6 Rated Power

– 2200 W

## 4.7 Dimensions and Weight

In closed state: (with standard hopper)
Height: 1675mm
Width: 576mm (1090 mm with open hopper)
Depth: 760mm
Weight: approx. 120kg
Weight without rotor and without hopper: approx. 90kg

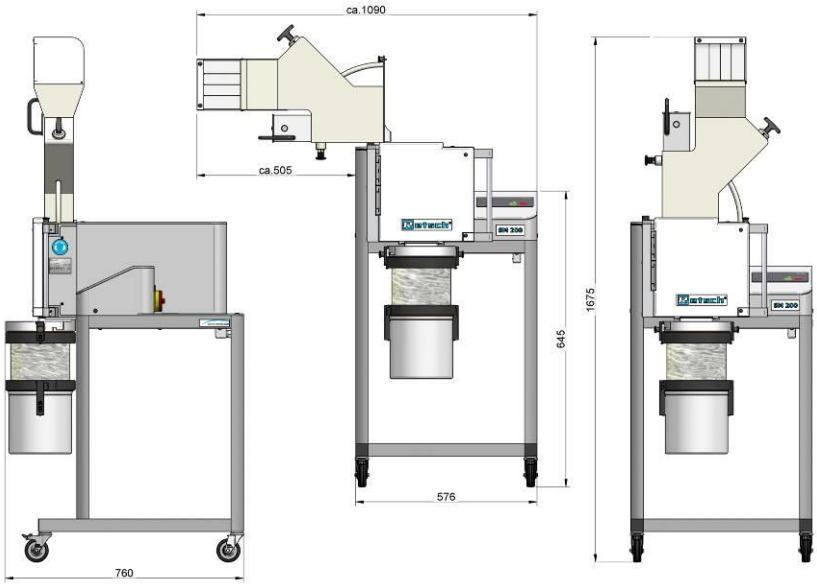


Fig. 8: Dimensions

## 4.8 Required Floor Space

1090 mm x 760 mm – no safety gaps necessary

# 5 Operating the Device

## 5.1 Views of the Instrument

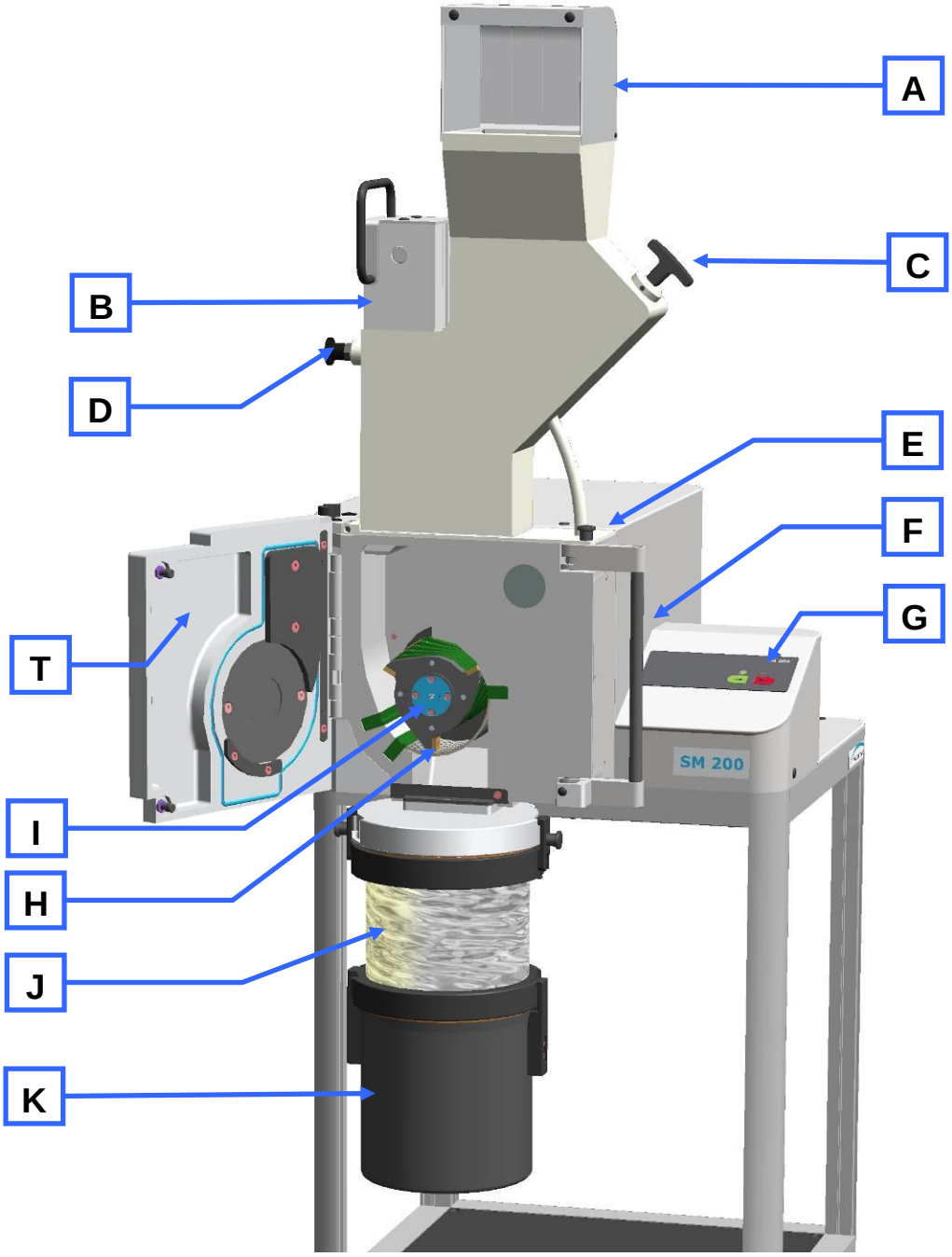


Fig. 9: Front view

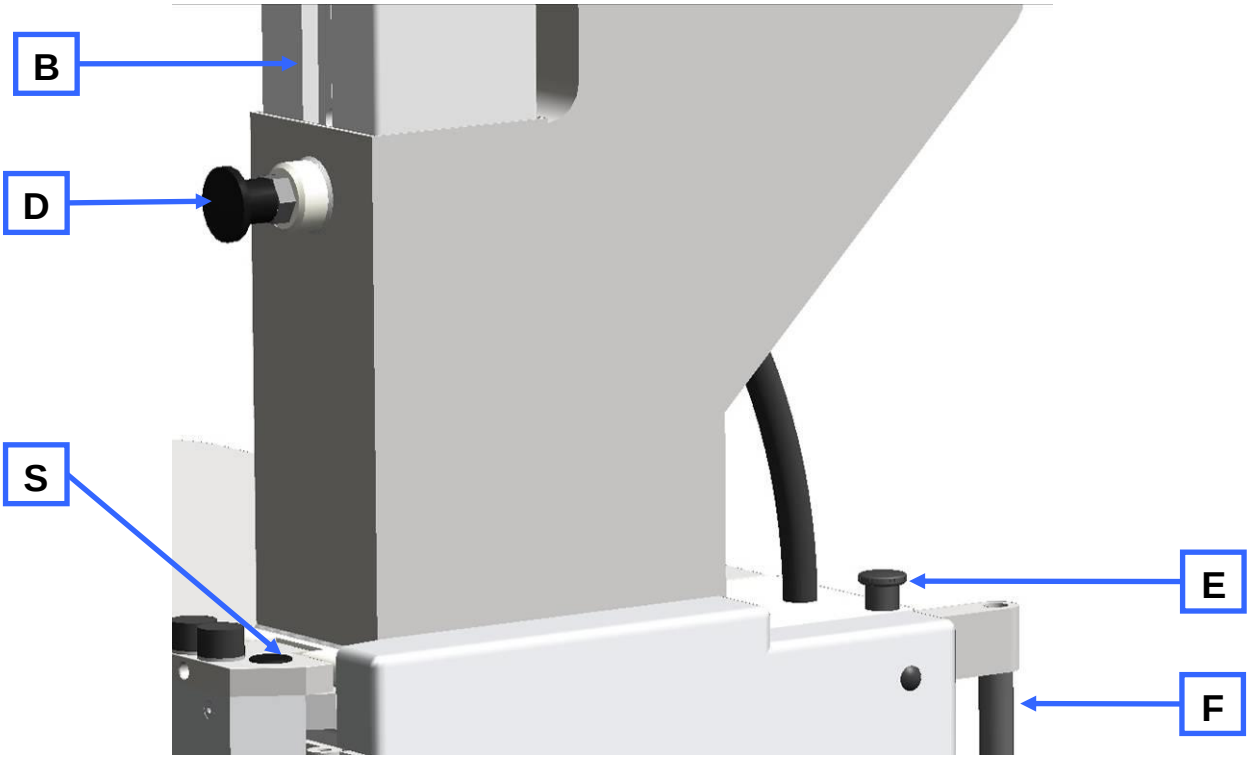


Fig. 10: Front view from the left (detail)

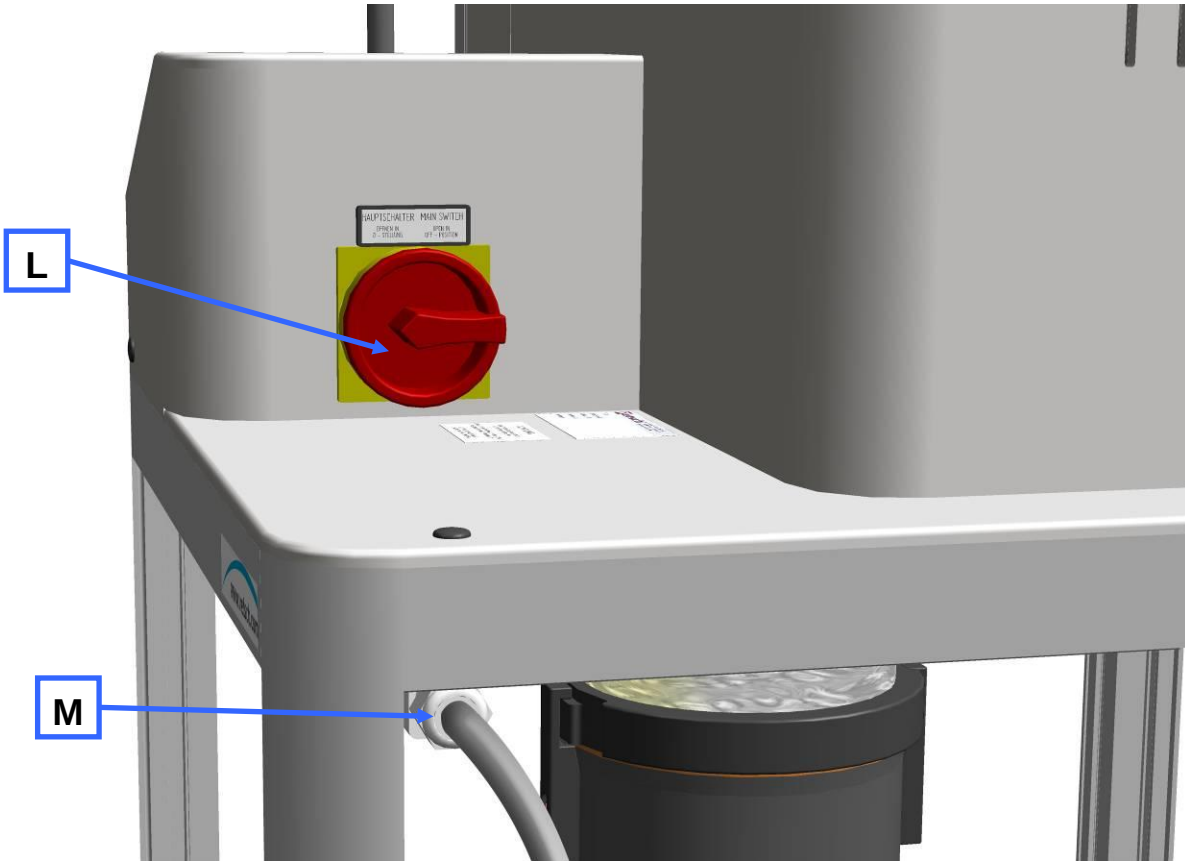


Fig. 11: Rear view

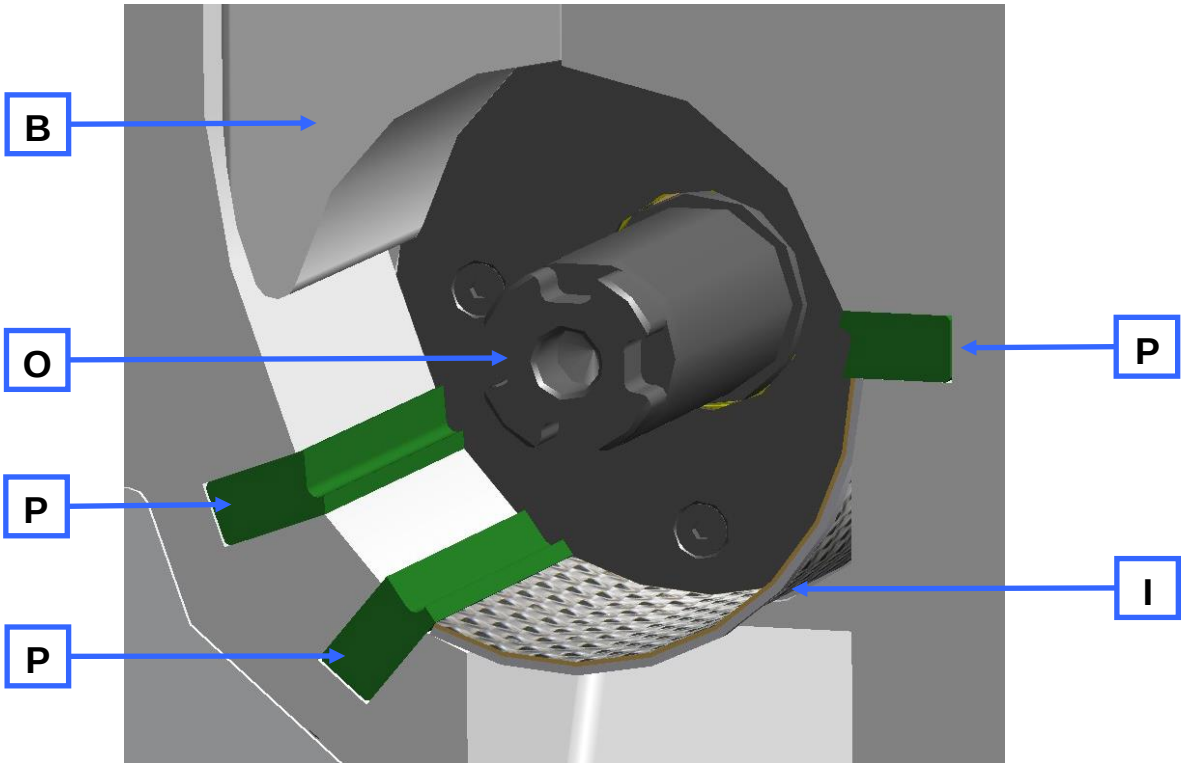


Fig. 12: View of the grinding chamber

## 5.2 Overview table of the parts of the device

| Element | Description | Function |
|---|---|---|
| **A** | Feed hopper access barrier | Prevents people reaching into the feed hopper |
| **B** | Plunger | When pulled, it releases the material feed chute.<br>Pushes sample onto the rotor. |
| **C** | Metering plunger | Pushes the material to be ground into the feed hopper area of the filling plunger<br>– Pulled out: the material can be fed.<br>– Pushed in: the material remains in the area of the filling plunger. |
| **D** | Detent pin | Prevents the filling plunger being pulled out, blocks it or releases it.<br>– Pulled out: allows the filling plunger to move freely<br>– Released: filling plunger latches in the top position |
| **E** | Mini detent pin | Locks the door latch |
| **F** | Handle for door latch | Allows the door to be opened |
| **G** | Control panel | Starting and stopping the device, setting the speed |
| **H** | Parallel section rotor | Size reduction tool |
| **I** | Bottom sieve | The size and type of its perforation influences the fineness of the material being comminuted |
| **J** | Ring filter | Air outlet and sieve for sample material |
| **K** | Collecting receptacle | Collects comminuted stock |
| **L** | ON/OFF switch (main switch) | Connecting and disconnecting the device to/from the power grid.<br>- ON = LED (red) STOP lights up<br>- OFF = all LEDs are off |
| **M** | Connection cable | Power connection |
| **O** | Rotor shaft | Accommodates the size reduction tool |
| **P** | Cutting bars | Counterpart for the size reduction tool |
| **R** | Feed hopper | For feeding the sample material |
| **S** | Fastening screws for feed hopper | Locking screws for the feed hopper |
| **T** | Grinding chamber door | Closes the grinding chamber |

## 5.3 Operating elements and displays

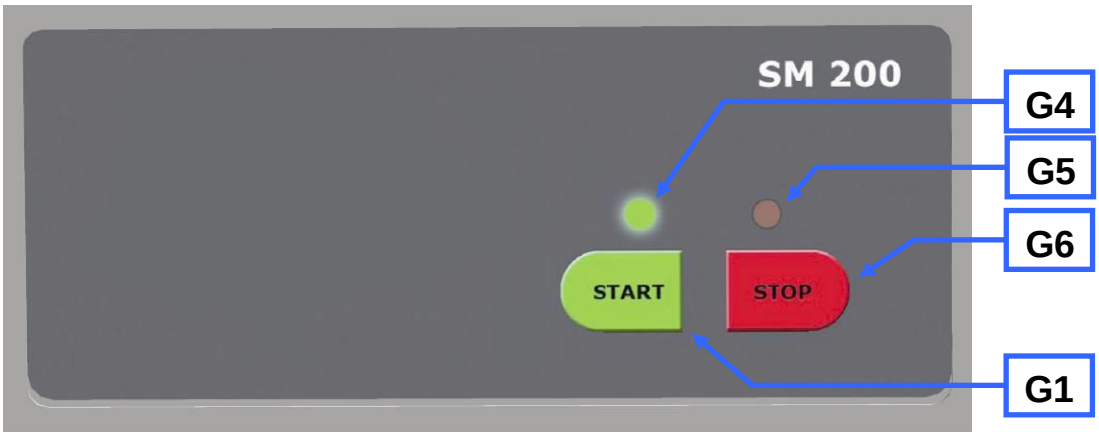


Fig. 13: View of the control panel and the display

## 5.4 Overview Table of the Operating Elements and the Display

| Element | Description | Function |
|---|---|---|
| **G1** | Start button | Starts the device |
| **G6** | Stop button | Stops the device |
| **G4** | Green LED | Device is on |
| **G5** | Red LED | Device ready for use/flashing light indicates an error |

## 5.5 Opening and Closing of the Device

The motor must come to a complete stop before the mill housing can be opened.

- Stop the device by pressing the stop button (**G6**).
- Pull the mini detent pin (**E**) upwards
- Press the handle on the door latch (**F**) backwards.
    - Open the grinding chamber door.

*NOTE*

**Do not close the grinding chamber door if the feed hopper is folded out to the side**, because this would damage the device.

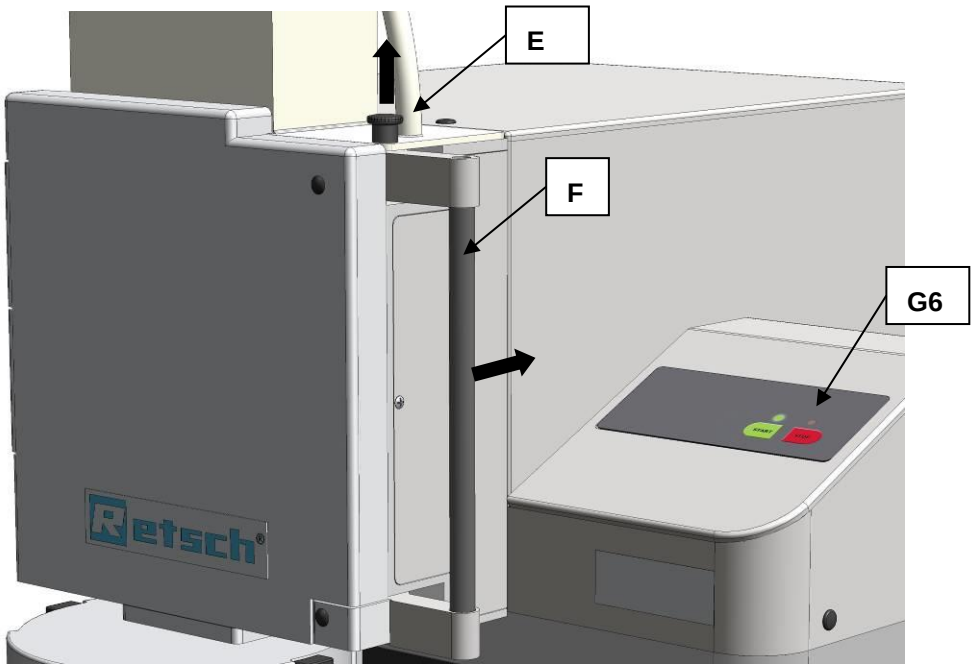


Fig. 14: Opening the grinding chamber door

## 5.6 Mounting the bottom sieve

- Select the appropriate bottom sieve.
    - Open the mill housing and push the bottom sieve (**I**) of your choice into the device.

## 5.7 Replacing the rotor

**CAUTION**

**Injuries in the form of cuts**

Sharp cutting edges on the rotors and cutting bars

– The sharp cutting edges on the rotors and cutting bars can injure hands.

- **Wear protective gloves when replacing the cutting rotors and cleaning the grinding chamber.**
- **Use the rotor extraction tool when handling the cutting rotors**.

*NOTE*

**Wear or damage of the device**
Operation without grinding set

– During operation of the device without grinding set, excessive wear or damage to the device may occur.

- **Operate the device only with a grinding set mounted.**

*NOTE*

**Damage to mechanical components**
Blockages typical of cutting mills

– When coarse, solid material is fed in for grinding, the high feeding capacity of the standard rotor can cause blockages that are typical of the cutting mills.

- **If blockages occur, switch off the mill immediately and remove the clogging material.**

### 5.7.1 Removing the Rotor

- Stop the device.
- Open the grinding chamber door.
- Screw the extraction tool (EG) onto the rotor and pull the rotor off the driving shaft.

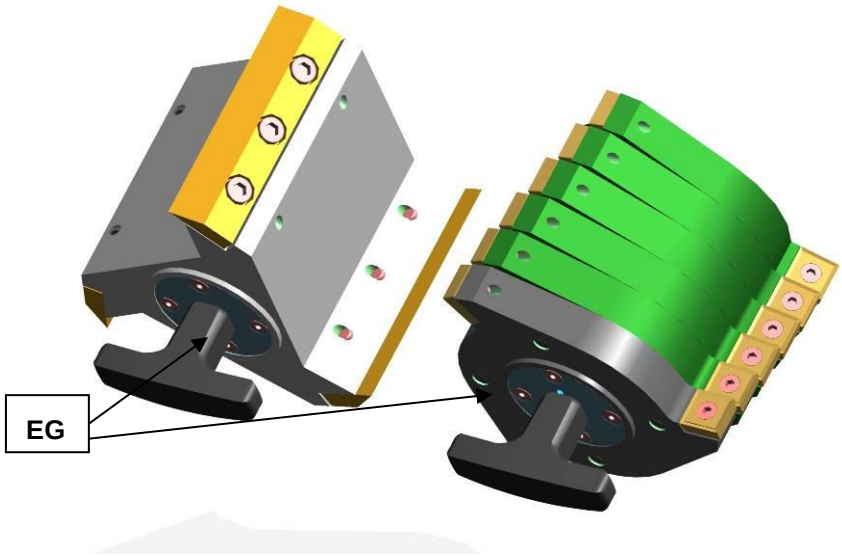


Fig. 15: Extraction tool

### 5.7.2 Inserting the Rotor

- Clean and lubricatethe motor shaftas well as the rotor.
- Push the rotor onto the motor shaft.

The device is otherwise essentially maintenance-free.
However, we recommend a regular inspection of the cutting tools depending on the frequency of use but at least once a month .

## 5.8 Inserting the filter unit and collecting receptacle

The filter unit serves as an air outlet for the air flow generated by the comminuting rotors.

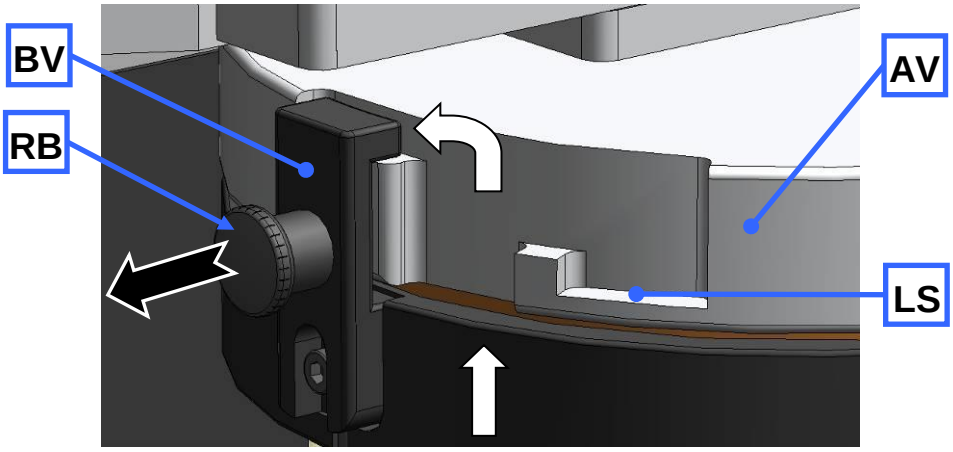


Fig. 16: Mounting and removing the filter unit

- As shown in the illustration, insert the bayonet fixing(BV) that is on the filter unit (J) into the discharge flange(AV).
- Turn the filter unit in a clockwise direction in order to engage the bayonet fixing.
- To remove the filter unit, pull the detent pin (RB) to release the bayonet fixing (BV).

Alternatively, the collecting receptacle can be put onto the discharge flange directly. In the latching position (BV) the air flowis prevented from escaping.
In the latching position (LS) a gap remains between the discharge flange and the collecting receptacle remains and this allows air to flow out .

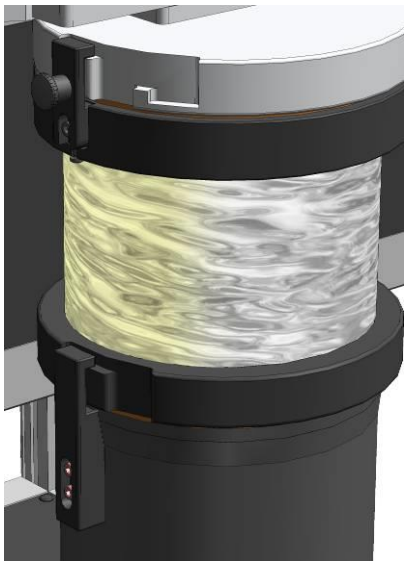

Fig. 17: Collecting receptacle and filter unit

## 5.9 Starting the grinding process

Switch on the power switches on the back of the device.
Press the START button.
*NOTE*
Make sure the device is running before you fill in the sample material. Otherwise, motor blockages can occur as the device is starting up.

## 5.10 Stopping the grinding process

The grinding process can be interrupted by pressing the stop button (G6).
Once the motor has stopped, you can pull the mini detent pin (E) upwards and press the handle on the door latch (F) backwards.
The grinding chamber door can be opened now.

# 6 Mode of Operation of Feed Hopper

*NOTE*

**Motor blockage**

The material being ground clogs the rotor

– Blockages can damage mechanical components.

- **Feed material only while the device is running.**
- **Dose the material feed to suit the properties of the material.**

- Turn on the device.
- Pull the metering plunger (C) and the plunger (B) upwards.
- Put the material to be ground into the filling hole(AE).
    - If necessary, use the metering plunger to push the material to be ground in further.
- Seize the plunger by the grip and pull the detent pin (D).
- Press the plunger downwards slowly.

*NOTE*

Do not use excessive force on the plunger. **Blockages can damage mechanical components.**
In most cases, the plunger's own weight is sufficient to press the material to be ground into the grinding chamber.
If not, press the plunger to push the material in further, gently and in accordance with the device's capacity.

# 7 Assembling and using the cyclone

## 7.1 Cyclone assembly

**CAUTION**

V0014

**Injuries to limbs**
Rotating blade

– Can cause injury to hands and feet.
- **Keep hands and feet away from the device openings when the device is switched on.**
- **Pull the plug out before cleaning or retrofitting.**

**CAUTION**

V0001

**Risk of injury to fingers**
Reaching into the turning rotor

– Unintended reaching into the grinding area and the turning rotor.
- **Never connect the device to the mains without the discharge flange.**
- **Only operate the device with discharge flange.**

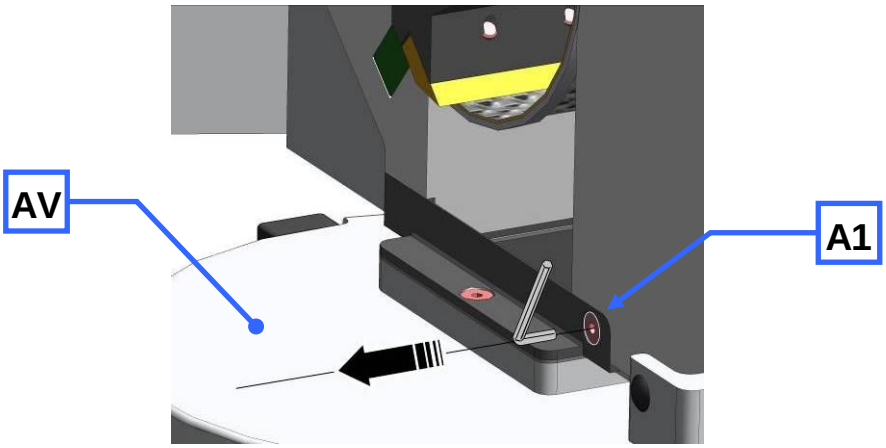


Fig. 18: Removing the discharge flange
- Disconnect the device from the mains.
- Loosen the screw (**A1**).
- Pull off the discharge flange (**AV**).

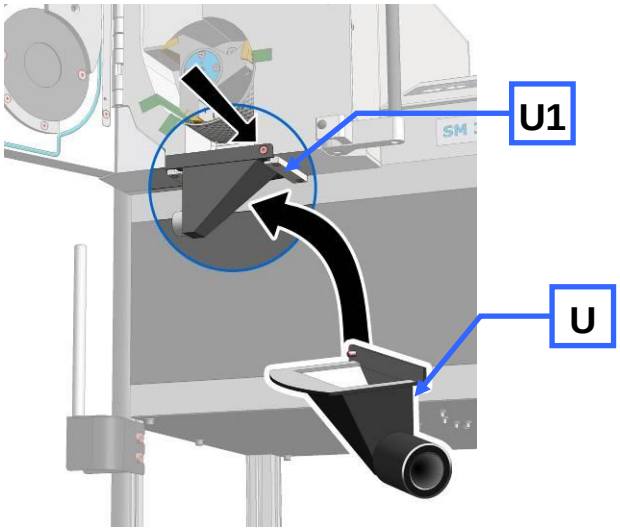


Fig. 19: Fastening the discharge flange

- Insert the retrofit dust removal (**U**).
- Tighten the screw (**U1**).

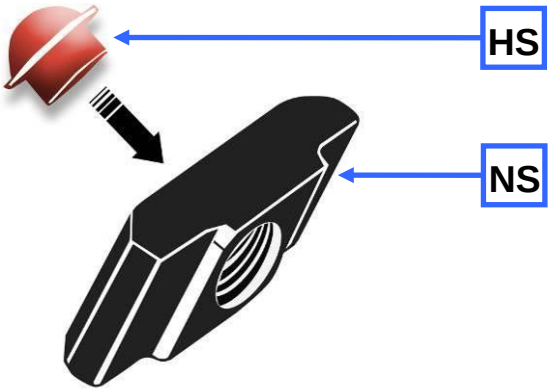


Fig. 20: Inserting the plug for the sliding block

- Insert the plug (**HS**) into the back (flat surface) of the sliding block (**NS**).

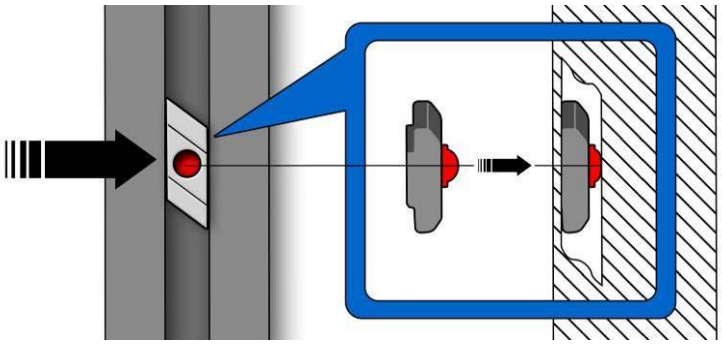

Fig. 21: Inserting the sliding block

- Guide the sliding block with plug into the aluminium profile.

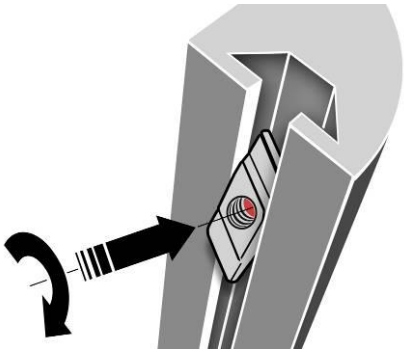

Fig. 22: Turning the sliding block

- Push in the sliding block against the resistance of the plug and turn the sliding block to the position indicated.
- Insert the second sliding block in the same way.

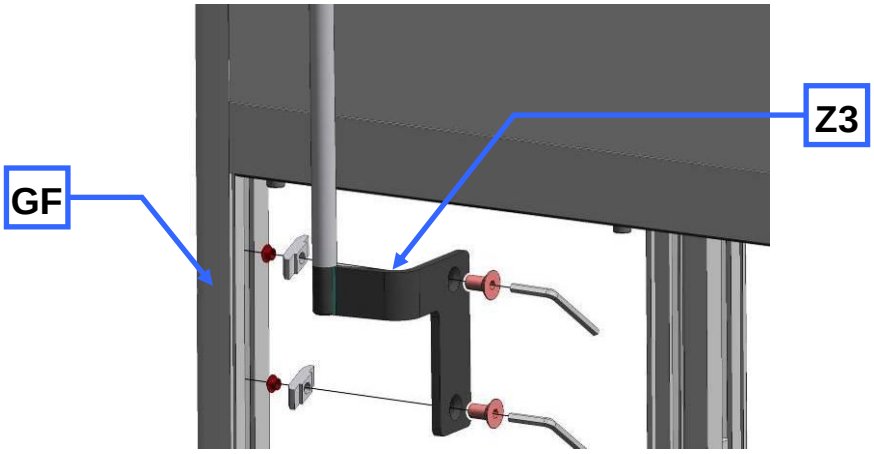


Fig. 23: Fastening the cyclone support

- Fasten the cyclone support (**Z3**) on the front left-hand leg of the housing (**GF**).

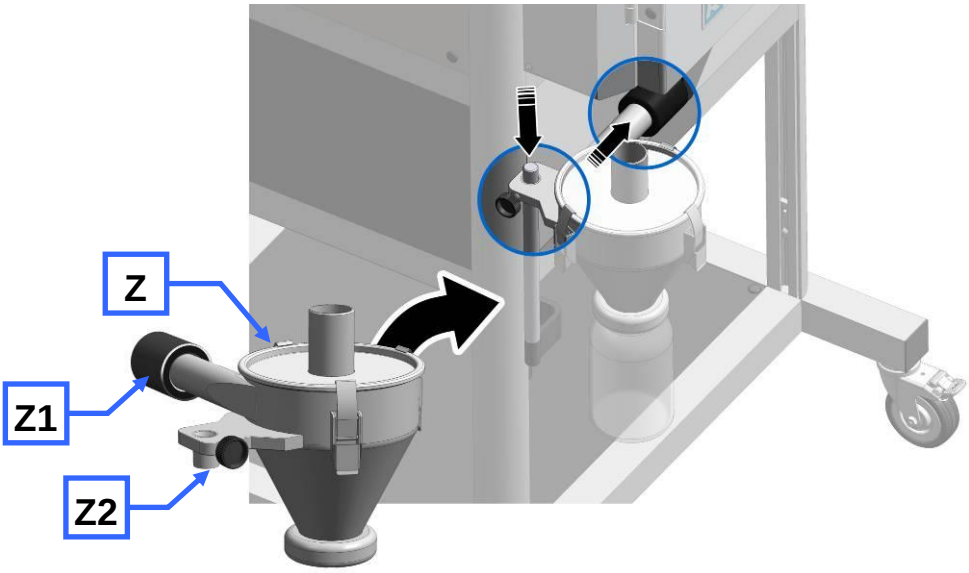


Fig. 24: Installing the cyclone

- Connect the cyclone (**Z2**) onto the rod of the stand on the cyclone support.
- Turn the side tube to the discharge flange and push the coupling (**Z1**) onto the adapters on the discharge flange.

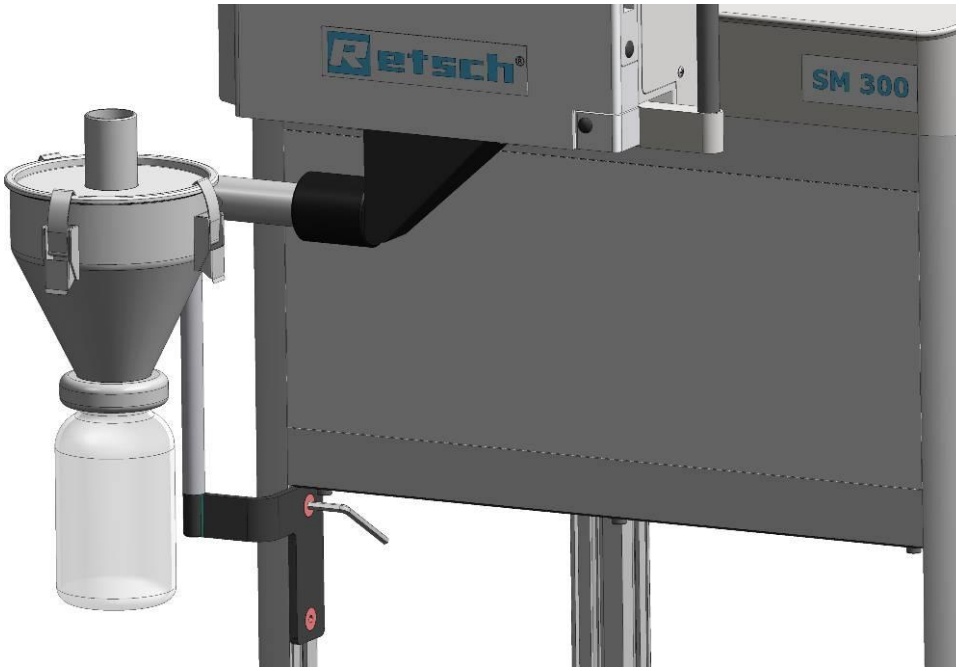


Fig. 25: Assembled cyclone

**CAUTION**

Before using the industrial vacuum cleaning, read the operating instructions supplied with the vacuum cleaner.

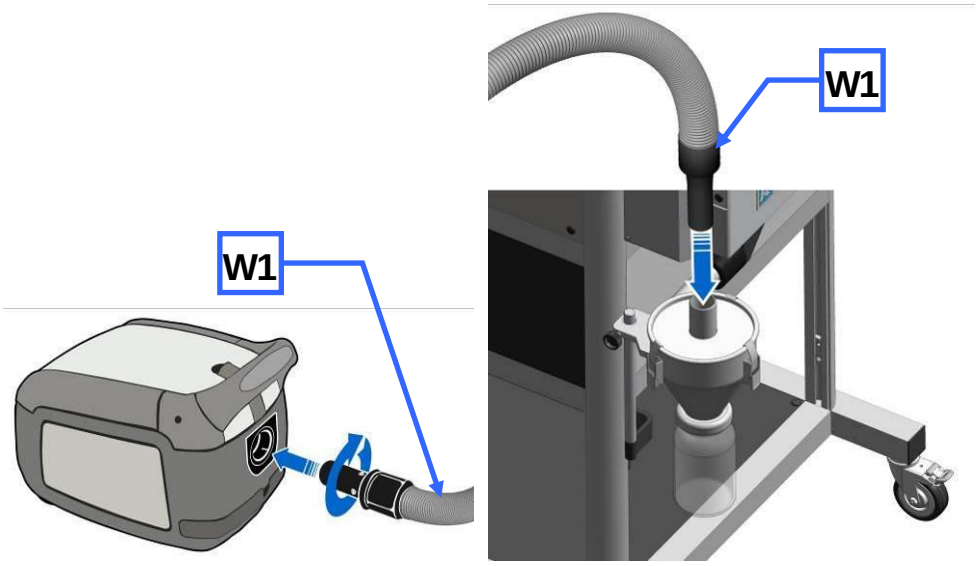


Fig. 26: Connecting the industrial vacuum cleaner

- Plug the connector for dust extraction (**W1**) into the top opening on the cyclone.

### 7.1.1 Inserting the wide mouth bottle adapter

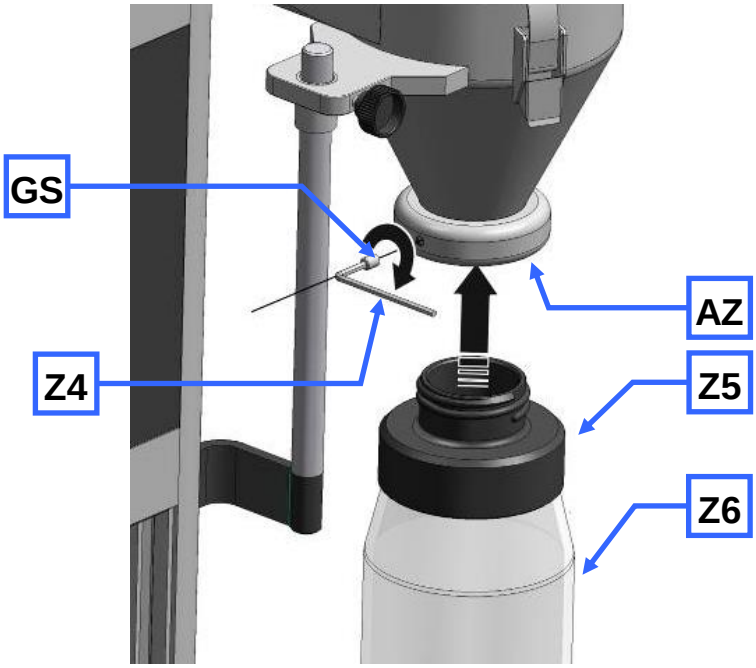


Fig. 27: Inserting the wide mouth bottle adapter

- Insert the adapter for wide mouth bottles (**Z5**) into the outlet opening of the cyclone (**AZ**) .
- Affix the adapter using the threaded pin (**GS**).
- Use a SW3 Allen key to screw in the threaded pin (**Z4**).

This avoids the adapter turning when the wide mouth bottles are screwed in and out.
You can use 1l, 2l and 5l wide mouth bottles.

# 8 Cleaning and service

## 8.1 Adjusting the cutting bars

To ensure that the device will function satisfactorily, it is necessary to check the cutting gap (target spacing 0.3 mm). The (**SL**) cutting bars are therefore moveable so that the cutting gap can be set.

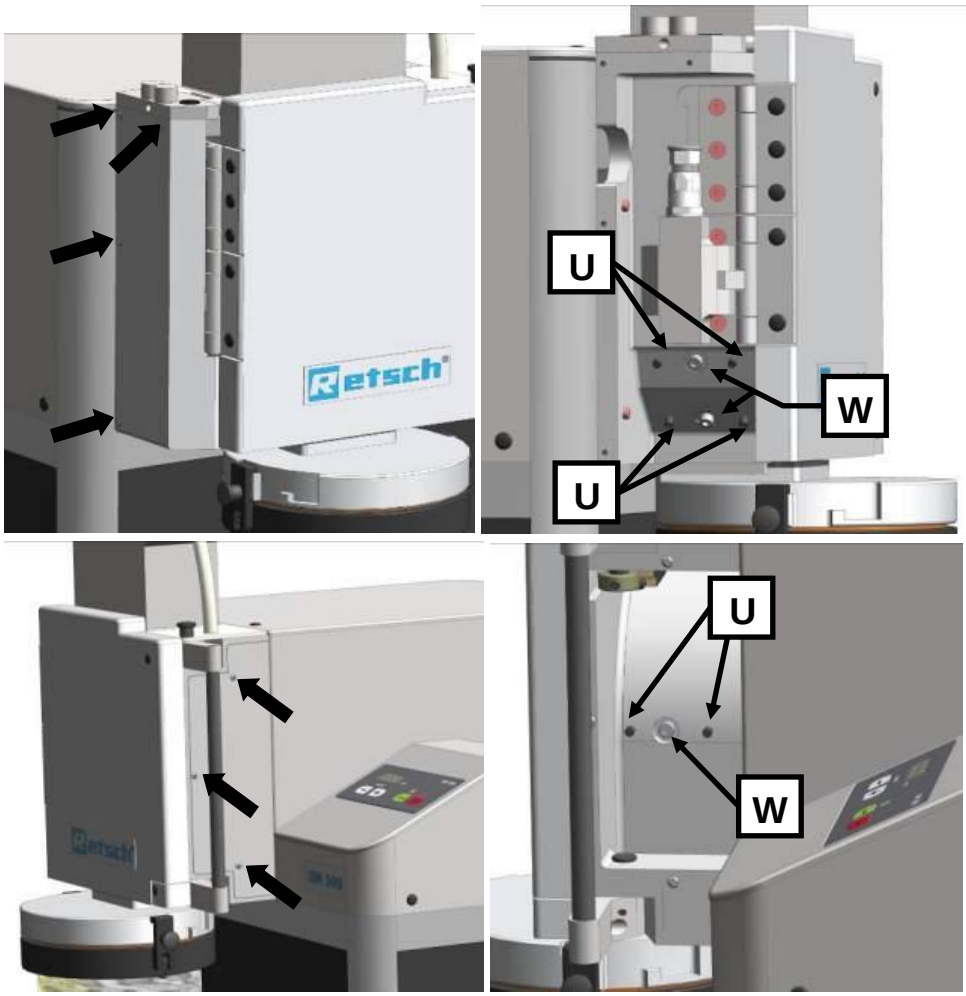


Fig. 28: Access to the cutting bars

- Loosen the four screws in the left cover.
- Loosen the three screws in the right cover.
- Open the grinding chamber door.
- Pull the rotor approx.10 mm out of the grinding chamber until it can move freely.

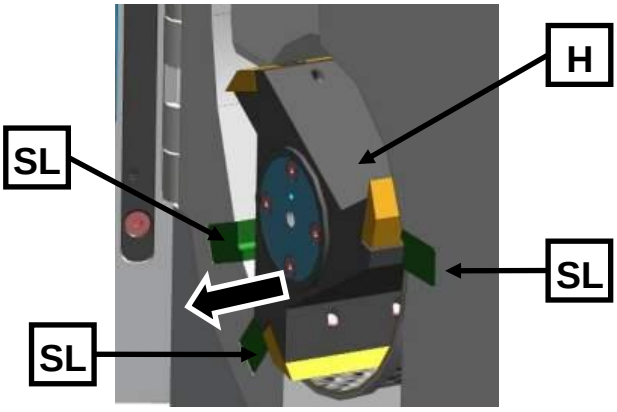


Fig. 29: Twist the rotor until it rotates freely

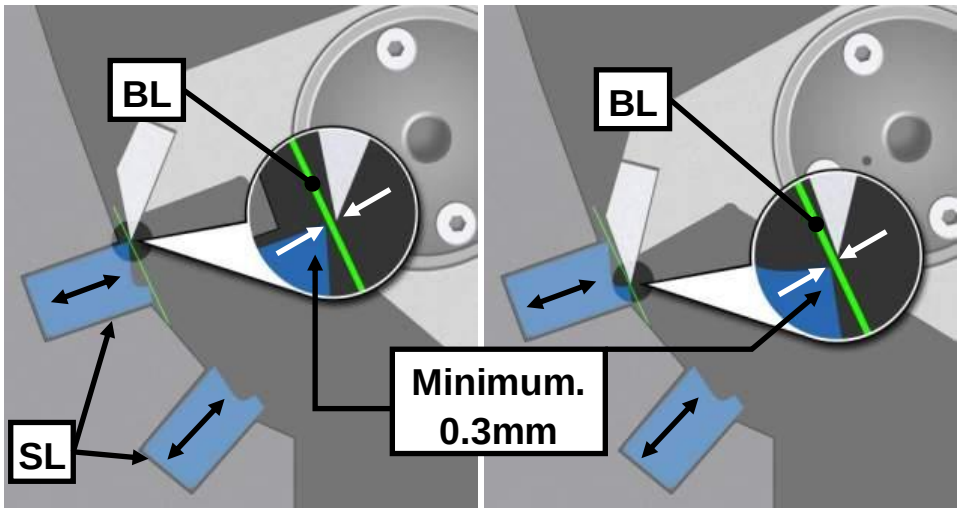


Fig. 30: Setting the cutting gaps

- Use a (**BL**) feeler gauge to check the cutting gap between all three (**SL**) cutting bars. The gap should be at least 0.3 mm.

The (**BL**) feeler gauge must be put on the two cutting surfaces as shown in the illustration. The cutting gap must have the same spacing along its entire depth. Check the cutting gap along its entire depth therefore.

The cutting edge with the smallest spacing from the knife marks the cutting gap (**SP1/2**). The second cutting edge can have a larger cutting gap.

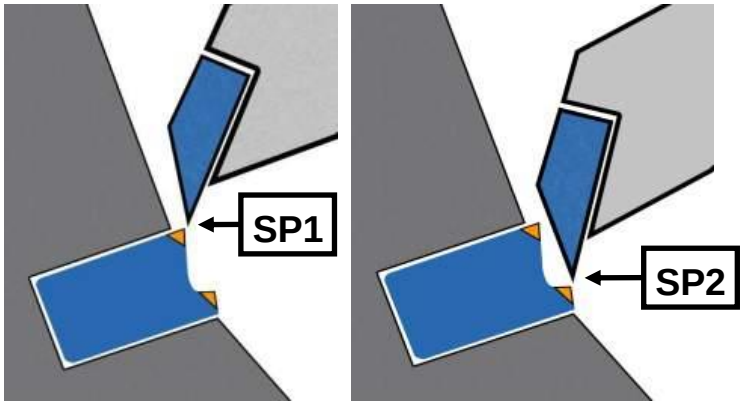


Fig. 31: Cutting gap

- Turning the studs (**U**) in a clockwise direction pushes the cutting bar closer to the rotor knife and reduces the cutting gap accordingly. Turning in an anti-clockwise direction increases the cutting gap.

- Tighten the (**WS**) screw and check the cutting gap. Repeat the procedure if necessary.
- Tighten the (**W**) screw at 7Nm again after adjusting the cutting bar.
- Then mount the right and left covers onto the device again.

*NOTE*

Do not set the cutting gap at less than 0.3 mm. Contact between the cutting plates and the cutting bars can damage mechanical components.
The tightening torque for the (**W**) screw must be 7Nm. It is not otherwise possible to guarantee that the cutting bars will be positioned securely.

# 9 Fault messages

| Flashing sequence | Meaning | Instruction |
|---|---|---|
| **G4** and **G5** flash alternately | Safety circuit is not closed | • Close the door.<br>• Pull the locking bracket forwards.<br>• Allow the locking bolt to engage. |
| **G5** flashes | Motor block | • Remove the blocking pieces of sample material from the grinding chamber.<br>• Press button G6<br>• Press button G1. |
| **G4** + **G5** flash simultaneously | Faulty relay contact | • Service necessary! |
| **G4** flashes | Revolving field detection | • Switch the two phases (L1 with L2) on the power cable |

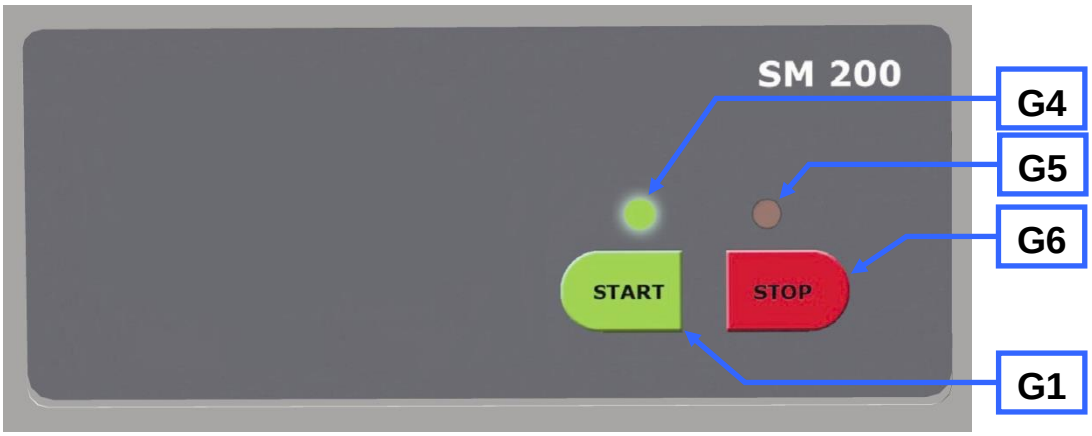


Fig. 32:Flashing sequence during error message

# 10 Disposal

Please observe the respective statutory requirements with respect to disposal.
Information on disposal of electrical and electronic machines in the European Community.
Within the European Community the disposal of electrically operated devices is regulated by national provisions that are based on the EU Directive 2002/96/EC on Waste Electrical and Electronic Equipment (WEEE).
Accordingly, all machines supplied after 13.08.2005 in the business-to-business area to which this product is classified, may no longer be disposed of with municipal or household waste. To document this they have the following label:

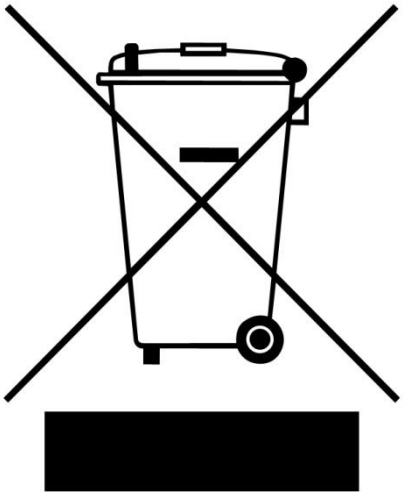

Fig. 33: Disposal label
Since the disposal regulations within the EU may differ from country to country we would request you to consult your supplier.

# 11 Index


**2**

2200 W ....19

**A**

Access to the cutting bars ....35
Adjusting the cutting bars ....35
Adjusting the height of the support structure ....15
Air flow ....27
Air outlet ....27
Ambient temperature ....10
Amperage ....12
Assembling and using the cyclone ....30
Atmospheric humidity ....10

**B**

Bar code ....11
Bayonet fixing ....27

**C**

Capacity ....12
CE marking ....11
Changes ....5
Cleaning and service ....35
Collecting receptacle and filter unit ....27
Confirmation ....9
Connecting the industrial vacuum cleaner ....33
Connection cable ....11
Copyright ....5
Cutting gap ....37
Cyclone assembly ....30

**D**

Degree of protection ....18
Description ....23, 24
Device
  close ....25
  open ....25
Device designation ....11
Dimensions ....19
Discharge flange ....27
Disposal ....39
Disposal label ....11
Disposal label ....39

**E**

Electrical connection ....11
Emissions ....18
Error message ....38
Explanations of the safety instructions ....6
External fuse ....11
Extraction tool ....26
Eye bolt ....12

**F**

Fastening the cyclone support ....32
Fastening the discharge flange ....31
Fault messages ....38
Filling hole ....29
flash ....38
flashing ....38
Flashing sequence ....38
Flashing sequence during error message ....38
Frequency of use ....26
Front view ....20
Front view from the left (detail) ....21
Function ....23, 24
Fuse strength ....12
Fuse type ....12

**G**

General safety instructions ....7

**H**

Height adjustment and alignment of the support structure ....14

**I**

Inserting the filter unit and collecting receptacle ....26
Inserting the Rotor ....26
Inserting the sliding block ....31
Inserting the wide mouth bottle adapter ....34
Inspection ....26
Installation ....10
Installation height ....14
Installation of the device ....14
Installation site conditions ....10
Installing the cyclone ....32
IP54 ....18

**L**

lubricate ....26

**M**

Mains frequency ....12
maintenance-free ....26
Manufacturer’s address ....11
Maximum relative humidity ....10
Mode of Operation of Feed Hopper ....29
Moderate or mild injury ....6
monthly ....26
Motor rotation speed ....18
Motor shaft ....26
Mounting and removing the filter unit ....27
Mounting the bottom sieve ....25
Mounting the feed hopper ....13
Mounting the Feed Hopper ....12, 13

**N**

Noise measurement ....18
Notes on the manual ....5
Number of fuses ....12

**O**

Opening the grinding chamber ....25
Operating elements and displays ....24
Operating the device ....20

Optimal alignment ....16
Overview Table of the Operating Elements and the Display ....24
Overview table of the parts of the device ....23

**P**

Packaging ....10
Part number ....11
Plug ....31
Power version ....12
property damage ....6
Putting on the protective caps ....14

**R**

Rated power ....19
Rated speed of the motor ....18
Rear view ....21
receptacle volume ....19
Receptacle volume ....18
Regulations for the place of installation ....11
Removing the discharge flange ....30
Removing the Rotor ....26
Removing the transport aid ....12, 13
Removing the Transport Safeguard ....12
Repair ....8
Replacing the rotor ....25
Required floor space ....19

**S**

Safety warnings ....6
Serial number ....11
serious injury ....6
Service Address ....8
Setting the cutting gaps ....36
Sliding block ....31
Starting the grinding process ....27
Stopping the grinding process ....27

**T**

Target group ....7
Technical data ....17
Temperature fluctuation and condensed water ..10
Transport ....10
Transportation aid removing ....12
Turning the sliding block ....32
Twist the rotor until it rotates freely ....36
Type plate ....11
description ....11
Type plate lettering ....11

**U**

Use of the device for the intended purpose ....17

**V**

View of the control panel and the display ....24
Views of the instrument ....20

**W**

Wear ....25
Weight ....19

**Y**

Year of production ....11

EU Declaration of Conformity
Translation

# CUTTING MILL

**SM 200 | 20.728.xxxx**

**EU DECLARATION OF CONFORMITY**

Herewith we declare, represented by the signatory, that the above mentioned device complies with the following directives and harmonized standards:

**Machinery Directive 2006/42/EC**

Applied standards, in particular:

| | |
|---|---|
| DIN EN ISO 12100 | Safety of machinery |
| DIN EN ISO 13849-1 | Safety of machinery - Safety-related parts of control systems |
| DIN EN 13683 | Garden equipment - Integrally powered shredders/chippers – Safety |
| DIN EN 60204 | Safety of machinery - Electrical equipment of machines |

**EMC Directive 2014/30/EU**

Applied standards, in particular:

| | |
|---|---|
| DIN EN 55011 | Industrial, scientific and medical equipment - Radio-frequency disturbance characteristics - Limits and methods of measurement |
| DIN EN 61000-3-2 | Electromagnetic compatibility (EMC) |
| DIN EN 61000-3-3 | Electromagnetic compatibility (EMC) |
| DIN EN 61326-1 | Electrical equipment for measurement, control and laboratory use - EMC requirements |

**Low Voltage Directive 2014/35/EU**

Applied standards, in particular:

| | |
|---|---|
| DIN EN 61010-1 | Safety requirements for electrical equipment for measurement, control and laboratory use |

**Authorized person for the compilation of technical documents:**

Dr. Loredana Di Labio (technical documentation)

Furthermore, we declare that the relevant technical documentation for the above mentioned device has been compiled according to Annex VII Part A of the Machinery Directive, and we undertake to submit this documentation on request to the market surveillance authorities.

**In case of a modification of the device not previously agreed with Retsch GmbH, as well as the use of unauthorised spare parts or accessories, this declaration will lose its validity.**

Retsch GmbH

Haan, 08/2017

Dr. Ing. Frank Janetta, Team Leader R&D Department

part of VERDER scientific

© Retsch GmbH · Retsch-Allee 1-5 · 42781 Haan · Germany
www.retsch.com · e-mail: info@retsch.com · phone: +49 2104 2333-100

**Copyright**

© Copyright by
Retsch GmbH
Retsch-Allee 1-5
42781 Haan
Germany