Genius 1024

Nitrogen/Dry Air Generator for Sciex Mass Spectrometers

PEAK SCIENTIFIC

*Your local **gas generation** partner*

Description

Designed exclusively to meet the needs of SCIEX LC-MS systems and approved by SCIEX for use with all their RUO (Research Use Only) LC-MS systems, the Genius 1024 provides a compact single source gas solution for all Sciex LC-MS instruments (excluding MD).

The Genius 1024 is built around the trusted and proven technology of Peak Scientific's Genius series of generators. Designed mainly for LC-MS applications, these are self-contained systems featuring integrated compressors, delivering laboratory-grade nitrogen at various pressures and flow rates required by numerous instruments.

Applications

- Gas solution for all Sciex Mass Spectrometers excluding MD instruments

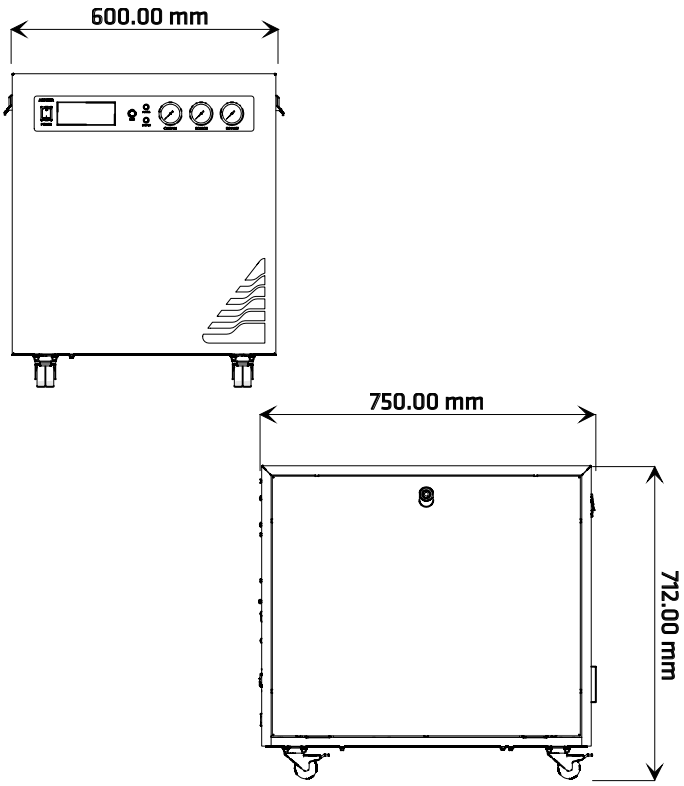

Genius 1024 Dimensions

Key Features

- Supports all Sciex MS (except MD)
- Delivers nitrogen as curtain gas and dry air as source and exhaust gas
- Compact, under bench solution with low lifetime running costs
- Compressor based solution, no need for an external air supply
- High-specification latest generation compressors located in insulated chamber reducing noise and vibration
- Service indication to allow planning of preventative maintenance
- Minimal set-up required
- 12 month comprehensive on-site warranty

Copyright 2017 Peak Scientific - Rev - Genius 1024 Data sheet | Rev 4 | RSID 1976 | EN - 22/11/17

Technical Specifications	Genius 1024
Curtain Gas (Nitrogen)*	19 L/min @ up to 65 psi
Source Gas (Dry Air)*	26 L/min @ up to 100 psi
Exhaust Gas (Dry Air)*	25 L/min @ up to 60 psi
Min/Max Operating Temperature	5°C - 30°C / 41°F - 86°F
Max Relative Humidity	80% - non condensing
Max Altitude	2000 Meters
Particles	< 0.01µm
Gas Outlets	3x 1/4" BSP Female
Phthalates	None
Suspended Liquids	None
Electrical Requirements	230v 50/60Hz 7A
Power Consumption	1610 watts
Generator Dimensions (HxWxD)	713 x 600 x 750mm/28.1 x 23.6 x 29.5 in
Generator Weight	108.5 Kg (239 lbs)

Ordering Information	
Part Number	10-9524
Annual Service	08-9110
Standard Maintenance Plan	Visit: **www.peakscientific.com/ordering**
Complete Maintenance Plan	

*Please note, these performance characteristics are valid only when paired with an approved Sciex application. Please refer to current application matrix for a list of supported products.

[PEAK Protected]™

Peak Scientific gas generators define the benchmark in reliability, convenience and performance in laboratories around the world, and come backed by a 12 month warranty. Beyond this period however you can ensure that you're investment continues to be **[Protected]** by our comprehensive generator care cover.

Our world-class aftercare support packages deliver a program of scheduled preventative maintenance whilst giving you the reassurance of instant access to worldwide technical support and priority on-site response in the untimely event of a breakdown.

Peak Scientific's Quality Management System conforms to: ISO:9001:2008

FM 515973

Product Certifications

Copyright 2017 Peak Scientific - Rev - Genius 1024 Data sheet | Rev 4 | RSID 1976 | EN - 22/11/17

Wolf Laboratories Limited

www.wolflabs.co.uk

Wolflabs

Tel: 01759 301142 Fax:01759 301143 sales@wolflabs.co.uk

Use the above details to contact us if this literature doesn't answer all your questions.

Pricing on any accessories shown can be found by keying the part number into the search box on our website.

The specifications listed in this brochure are subject to change by the manufacturer and therefore cannot be guaranteed to be correct. If there are aspects of the specification that must be guaranteed, please provide these to our sales team so that details can be confirmed.