Model KMF 240 | Constant climate chambers with expanded temperature / humidity range

The BINDER KMF ensures absolutely constant test conditions throughout the testing area. A big advantage of this constant climate chamber is its low space requirement and flexibility in terms of water supply. The wide temperature and humidity range make this constant climate chamber ideally suited for stress testing series.

BENEFITS

- Homogeneous climate conditions thanks to APT.line™ technology
- Automatic water and wastewater management
- Humidification with fast response times
- Wide humidity range up to 98 % RH
- Long-term stress testing, e.g. at 85 °C / 85 % RH

Model 240

MAIN FEATURES

- Temperature range: -10 °C to 100 °C
- Humidity range: 10 % RH to 98 % RH
- APT.line™ preheating chamber technology
- Humidity regulation with capacitive humidity sensor and vapor humidification
- Inner chamber made of stainless steel
- BINDER Multi Management Software APT-COM™ Basic Edition
- Intuitive touchscreen controller with time-segment and real-time programming
- Internal data logger, measured values can be read out in open format via USB
- Unit self-test for comprehensive status analysis
- Tight-sealing inner door made of safety glass (ESG)
- Avoidance of glass corrosion by special TIMELESS coating
- 1 stainless steel rack
- Access port with silicone plug, 30 mm, left
- Class 3.1 independent temperature safety device (DIN 12880) with visual and audible temperature alarm
- Computer interface: Ethernet
- Door heating

ORDERING INFORMATION

Interior volume [L]	Voltage	Option model	Version	Art.-No.
Model KMF 240				
247	200…230 V 1~ ph 50/60 Hz	Standard	KMF240-230V	9020-0343
	200…240 V 1~ ph 50/60 Hz	Standard	KMF240-240V	9020-0344

TECHNICAL DATA

Description	KMF240-230V	KMF240-240V
Article Number	9020-0343	9020-0344
Performance Data Temperature		
Temperature range [°C]	-10…100	-10…100
Average heating-up rate according to IEC 60068-3-5 [K/min]	0.8	0.8
Average cooling down time according to IEC 60068-3-5 [K/min]	0.4	0.4
Max. heat compensation at 25 °C [W]	200	200
Performance Data Climate		
Temperature range [°C]	10…90	10…90
Temperature variation depending on setpoint [± K]	0.1…1	0.1…1
Temperature fluctuation depending on setpoint [± K]	0.1…0.3	0.1…0.3
Humidity range [% RH]	10…98	10…98
Humidity fluctuation depending on setpoint	≤2 ± % RH	≤2 ± % RH
Dew point temperature range [°C]	5…90	5…90
Electrical data		
Rated Voltage [V]	200…230	200…240
Power frequency [Hz]	50/60	50/60
Nominal power [kW]	2.1	2.1
Unit fuse [A]	16	16
Phase (Nominal voltage)	1~	1~
Internal Dimensions		
Depth [mm]	485	485
Height [mm]	785	785
Width [mm]	650	650
Housing dimensions not incl. fittings and connections		
Width net [mm]	930	930
Height net [mm]	1465	1465
Depth net [mm]	800	800
Measures		
Wall clearance back [mm]	100	100
Wall clearance sidewise [mm]	100	100
Interior volume [L]	247	247
Net weight of the unit (empty) [kg]	179	179
permitted load [kg]	100	100
Load per rack [kg]	30	30
Doors		
Inner doors	1	1
Unit doors	1	1
Environment-specific data		
Energy consumption at 85 °C and 85 % RH [Wh/h]	570	570
Sound-pressure level [dB(A)]	52	52
Fixtures		
Number of shelves (std./max.)	1/9	1/9

DIMENSIONS incl. fittings and connections [mm]

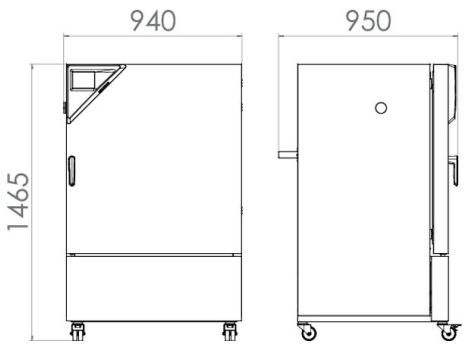

CHARTS

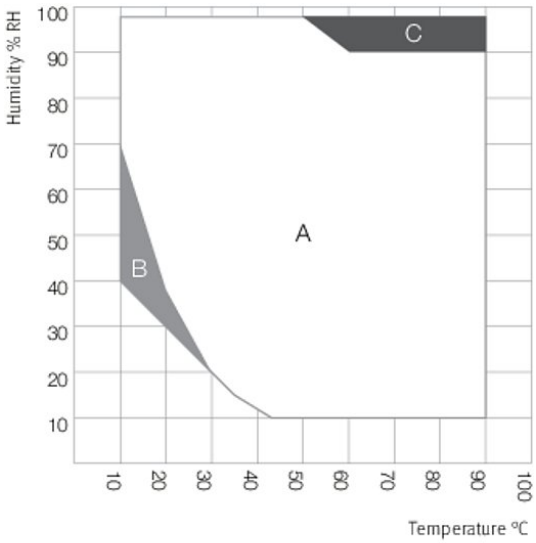

A: Guaranteed condensation-free range
B: Time-limited operation (max. 24 hours)
C: Condensation in the inner chamber may be possible

Climate chart

OPTIONS AND ACCESSORIES

Designation	Description	*	Art.-No.
Access port with silicone plug	left		
	30 mm	01	8012-1446
	50 mm	01	8012-1476
	100 mm	01	8012-1342
	right		
	30 mm	01	8012-1440
	50 mm	01	8012-1470
	100 mm	01	8012-1339
	top		
	30 mm	01	8012-1452
	50 mm	01	8012-1458
	100 mm	01	8012-1464
Alarm output, zero-voltage	for temperature (±2 °C) and humidity (±5 % RH), accessible via 6-pin DIN socket (max. 24 V - 2.5 A), with audible signal that can be switched off	–	8012-1677
Analog output 4-20 mA	for temperature and humidity values (output not adjustable)	–	8012-1680

* Notes › See last page

Designation	Description	*	Art.-No.
APT-COM™ 4 GLP-Edition	for working under GLP-compliant conditions. Measured values are documented in a tamper-proof way in line with the requirements of FDA Regulation 21 CFR 11.		
	version 4, GLP edition	19	9053-0042
APT-COM™ 4 PROFESSIONAL-Edition	convenient unit and user management built on the BASIC edition. Suitable for networking up to 100 units.		
	version 4, PROFESSIONAL edition	19	9053-0040
BINDER PURE AQUA SERVICE	system for preparation or complete desalination of tap water, containing single-use cartridge, hoses and measuring device	–	8012-0759
BINDER PURE AQUA SERVICE, accessories	Single-use, replacement cartridge for BINDER PURE AQUA System	–	6011-0165
Calibration certificate, expanded	for temperature and humidity; for extending the measurement in center of chamber to include another test value	–	8012-1191
Calibration certificate, temperature	temperature measurement incl. certificate and 27 measuring points at specified temperature	–	8012-1606
	temperature measurement incl. certificate, 15- 18 measuring points at specified temperature	–	8012-1586
	temperature measurement incl. certificate, 9 measuring points at specified temperature	–	8012-1565
Calibration certificate, temperature and humidity	Measurement in center of chamber at 25 °C / 60% RH or at specified test values	–	8012-1185
	temperature (according to DIN12880) and humidity measurement incl. certificate, 27 temperature measuring points and 1 humidity measuring point, at 25 °C / 60 % RH or at specified values	–	8012-1612
Class 3.3 independent temperature safety device	with visual alarm (DIN 12880)	–	8012-1674
Data Logger Kit	T 220: For continuous temperature logging from -90 °C to 220 °C. The kit includes 1 data logger, Pt 100 sensor with 2 m extension cable and 1 magnetic fixture for mounting to the BINDER unit	19	8012-0715
	TH 100/70: For continuous temperature and humidity logging from -40 °C to 100 °C / 0% to 100% RH and additional logging of ambient conditions. Kit includes 1 data logger, 2 attachable combined humidity/temperature sensors, 2 m extension cable and 1 fixture for mounting to the BINDER unit	19	8012-1838
	TH 100: For continuous temperature and humidity logging from -50 °C to 100 °C; 0% to 100% RH. Kit includes 1 data logger, Pt 100 sensor with 2 m extension cable, and 1 magnetic fixture for mounting to the BINDER unit	19	8012-1837
Data Logger Software	LOG ANALYZE software kit, configuration and evaluation software for all BINDER Data Logger Kits (incl. USB data cable)	19	8012-0821
Door lock	lockable door handle	–	8012-1660
Inner chamber, reinforced	including 2 reinforced racks	–	8012-0624
LED light bars	Basic set consisting of 2 pieces, attachment material, control unit for max. 4 light strips, 100-240 V, 50/60 Hz		
	Basic set 300, length 30 cm	–	8012-1107
	Basic set 500, length 50 cm	–	8012-1108
	Expansion set consisting of 2 pieces, attachment material: clips. For expanding the basic set of light bars		
	Expansion set 300, length 30 cm	–	8012-1716
	Expansion set 500, length 50 cm	–	8012-1717
pH-neutral detergent	concentrated, for gentle remove of residual contaminants; 1 kg	–	1002-0016
Pt 100 temperature sensor	additional flexible Pt 100, interior, for displaying the temperature on the unit display	–	8012-1682
Rack	stainless steel	–	6004-0101
Rack accessories	fasteners (1 set of 4) for additional security of racks	–	8012-0620
Rack, reinforced	stainless steel, with fasteners (1 set of 4)	–	8012-0638
RS 485 / RS 422 interface converter	RS 422 cable set and RS 485 / RS 422 interface converter for connection to 10-way plug distributor		
	115 V option model	–	8012-0599
	230 V option model	–	8012-0589
RS 485 interface, 2-wire	Additional serial interface can be used parallel to Ethernet, for Multi Management Software APT-COM™	–	8012-1712
Shelf, perforated	Stainless steel	–	6004-0040
Water supply set	external, consisting of fresh- and waste-water containers (20 liters each), cabling and pump		
	external, for hanging from the back of the device	–	8012-0643

* Notes › See last page

SERVICES

Designation	Description	*	Art.-No.
Installation services			
Installation	and set up of unit at operating location, connect to existing connections	13, 18	DL10-0300
Instruction	unit function instructions for operation and programming of the controller	18	DL10-0700
Preventive maintenance			
Preventive maintenance	Executive of equipment inspection according to maintenance plan	14, 18	DL20-0400
Calibration services			
Calibration temperature and humidity	including certificate, one measuring point in center of chamber at 25 °C / 60 % RH or at specified values	14, 16, 17, 18	DL30-0301
Temperature and humidity measurement according to DIN12880	including certificate (27 temperature measuring points and one humidity measuring point, at 25 °C / 60 % RH or at specified values)	14, 16, 17, 18	DL30-0427
Temperature measurement 15 measuring points	including certificate, 15 measuring points at specified temperature	14, 16, 17, 18	DL30-0218
Temperature measurement 18 temperature measuring points and 1 humidity measuring point	including certificate, 18 temperature measuring points and 1 humidity measuring point in center of chamber, at 25 °C / 60 % RH or at specified values	14, 16, 17, 18	DL30-0318
Temperature measurement 27 temperature measuring points and 1 humidity measuring point	including certificate, 27 temperature measuring points and 1 humidity measuring point in center of chamber, at 25 °C / 60 % RH or at specified values	14, 16, 17, 18	DL30-0327
Temperature measurement 9 temperature measuring points and 1 humidity measuring point	including certificate, 9 temperature measuring points and 1 humidity measuring point in center of chamber, at 25 °C / 60 % RH or at specified values	14, 16, 17, 18	DL30-0309
Validation services			
Execution of IQ/OQ	in accordance with qualification folder	15, 18, 20	DL42-0300
Execution of IQ/OQ/PQ	in accordance with customer's requirement, price: on request	15, 18	DL44-0500
Qualification folder IQ/OQ	supporting documents for validation performed by customer, consisting of: IQ/OQ checklists, unit schematics, QM certificate in accordance with ISO 9001	15, 18, 20	8012-0879
Qualification folder IQ/OQ/PQ	supporting documents for validation performed by customer, in accordance with customer's requirement, extension of Qualification folder IQ/OQ by chapter PQ	15, 18	8012-0966
Warranty service			
Extension of the warranty from 2 to 3 years	beginning with the date of delivery, wearing parts are not included	–	DL02-4041
Extension of the warranty from 2 to 5 years	beginning with the date of delivery, wearing parts are not included	–	DL02-4042

* Notes › See last page

Wolf Laboratories Limited

www.wolflabs.co.uk

Wolflabs

Tel: 01759 301142 Fax:01759 301143 sales@wolflabs.co.uk

Use the above details to contact us if this literature doesn't answer all your questions.

Pricing on any accessories shown can be found by keying the part number into the search box on our website.

The specifications listed in this brochure are subject to change by the manufacturer and therefore cannot be guaranteed to be correct. If there are aspects of the specification that must be guaranteed, please provide these to our sales team so that details can be confirmed.