Operating Instructions

Moisture Analyzer

HE53

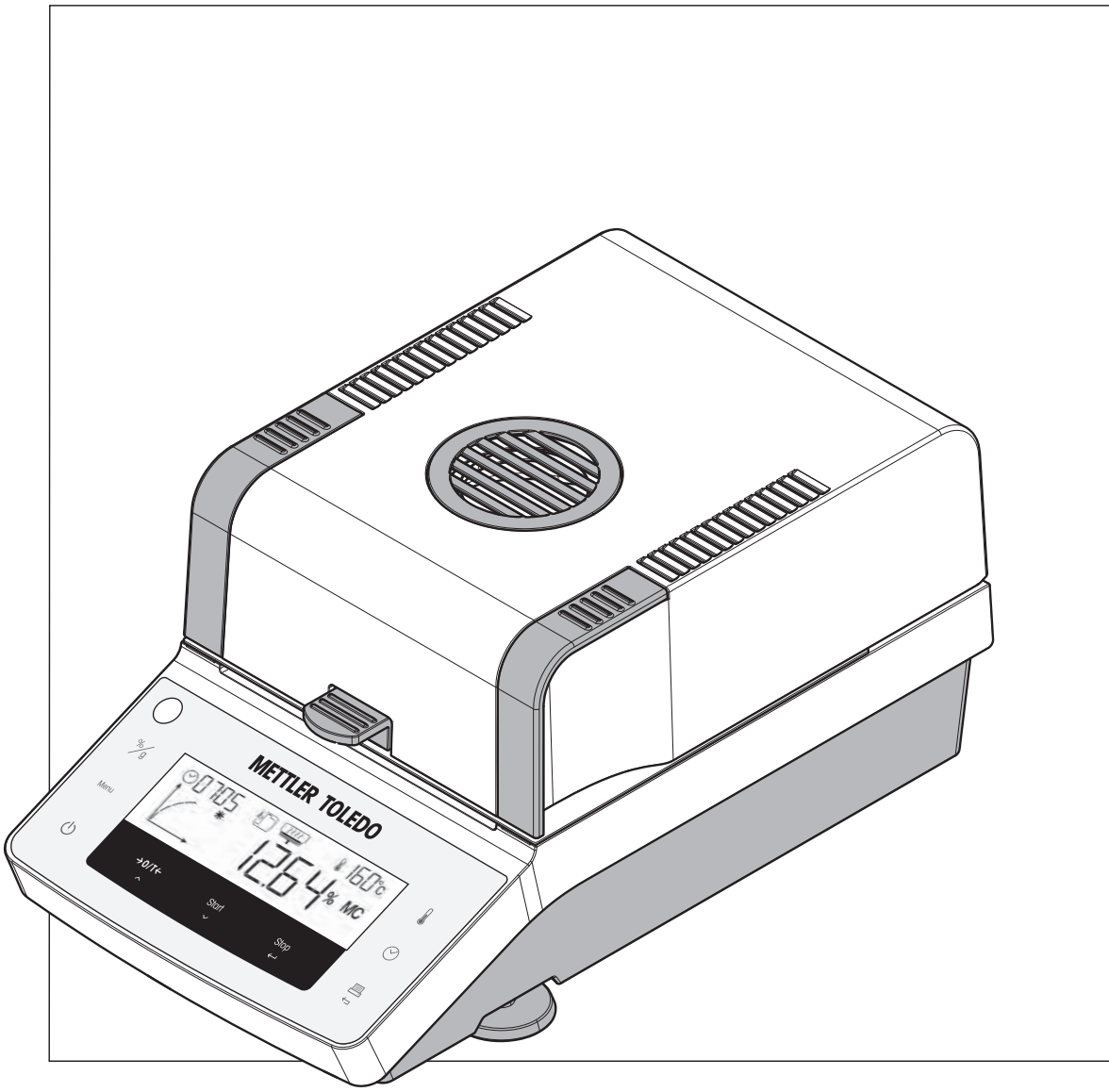

METTLER TOLEDO

Table of Contents

1 Introduction

Thank you for purchasing a Halogen Moisture Analyzer from METTLER TOLEDO.

Your Moisture Analyzer is fast and reliable. It offers a high level of operating convenience and useful functions to facilitate determination of the moisture content of your samples.

Behind your instrument stands METTLER TOLEDO, a leading manufacturer of not only balances and scales for the lab and production, but also analytical measuring instruments. A customer service network covering the entire globe with well trained personnel is your service at all times, whether you are choosing accessories or require guidance for a specific application to ensure optimum utilization of your instrument.

Your Halogen Moisture Analyzer is used for determining the moisture content of almost any substance. The instrument works on the thermogravimetric principle. At the start of the measurement the Moisture Analyzer determines the weight of the sample, the sample is then quickly heated by the integral halogen heating module and the moisture vaporizes. During the drying process the instrument continually measures the weight of the sample and displays the reduction in moisture. Once drying has been completed, the moisture or solids content of your sample is displayed as the final result.

Of decisive importance in practice is the rate of heating and even heating of the surface of the sample. In comparison with conventional infrared heating or the drying oven method, for example, the halogen heating module of your instrument needs a shorter time to reach its maximum heating power. It also allows use of high temperatures, an additional factor in shortening the drying time. Uniform heating of the sample material ensures good repeatability of the drying results and makes it possible to use a smaller amount of sample.

The instrument has a CE declaration of conformity and METTLER TOLEDO as the manufacturer has been awarded ISO 9001 and ISO 14001 certification. This provides you with the assurance that your capital investment is protected in the long term by a high product quality and a comprehensive service package (repairs, maintenance, servicing, adjustment service).

Finding More Information

▶ www.mt.com/moisture

Software version

These operating instructions are based on the initially installed firmware (software) version V1.10

1.1 Conventions and Symbols Used in these Operating Instructions

Key designations are indicated by a picture or text in square brackets (e.g. [🖶]

These symbols indicate an instruction:

- ▪ prerequisites
- 1 steps
- 2 ...
- ⇨ results

2 Safety Information

2.1 Definition of Signal Warnings and Symbols

Safety notes are marked with signal words and warning symbols. These show safety issues and warnings. Ignoring the safety notes may lead to personal injury, damage to the instrument, malfunctions and false results.

Signal Words

WARNING	for a hazardous situation with medium risk, possibly resulting in severe injuries or death if not avoided.
CAUTION	for a hazardous situation with low risk, resulting in damage to the device or the property or in loss of data, or minor or medium injuries if not avoided.
NOTICE	(no symbol) for important information about the product.
Note	(no symbol) for useful information about the product.

Warning Symbols


General hazard


Electrical shock


Hot surface


Inflammable or explosive substance


Toxic substance


Acid / Corrosion

2.2 Product Specific Safety Notes

Product Safety Information

Intended Use

Your Moisture Analyzer is used for determining the humidity in samples. Use the instrument exclusively for this purposes. Any other type of use and operation beyond the limits of technical specifications without written consent from Mettler-Toledo GmbH is not intended.

Moisture determination applications must be optimized and validated by the user according to local regulations. Application-specific data provided by METTLER TOLEDO is intended for guidance only.

It is not permitted to use the instrument in explosive atmosphere of gases, steam, fog, dust and flammable dust (hazardous environments).

General safety information

Your instrument corresponds to the state of the art technology and complies with all recognized safety rules, however, certain hazards may arise in extraneous circumstances. Do not open the housing of the instrument: It does not contain any parts which can be maintained, repaired or replaced by the user. If you ever have problems with your instrument, contact your authorized METTLER TOLEDO dealer or service representative.

Always operate and use your instrument only in accordance with the instructions contained in this document. The instructions for setting up your new instrument must be strictly observed.

If the instrument is not used according to the Operating Instructions, protection of the instrument may be impaired and METTLER TOLEDO assumes no liability.

Staff Safety

The Moisture Analyzer may be operated only by trained personnel who are familiar with the properties of the samples used and with the handling of the instrument.

These printed document must be read and understood before using the instrument. These printed document must be retained for future reference.

The instrument must not be altered or modified in any way. Only use METTLER TOLEDO original spare parts and accessories.

Protective Clothing

It is advisable to wear protective clothing in the laboratory when working with the instrument.

A lab coat should be worn.

A suitable eye protection such as goggles should be worn.

Use appropriate gloves when handling chemicals or hazardous substances, checking their integrity before use.

Safety Notes

⚠ WARNING

Risk of electric shock

Your instrument is supplied with a 3-pin power cable with an equipment grounding conductor. Only extension cables which meet this relevant standards and also have an equipment grounding conductor may be used. Intentional disconnection of the equipment grounding conductor is prohibited.

⚠ CAUTION

The Halogen Moisture Analyzer works with heat!

1 Ensure sufficient free space around the instrument to avoid heat accumulation and overheating (approx. 1 m free space above the heating module).
2 The vent over the sample must never be covered, plugged, taped over or tampered with in any other way.
3 Do not place any combustible materials on, under or next to the instrument since the area around the heating module may be hot.
4 Exercise caution when removing the sample. The sample itself, the sample chamber, the draft shield and any sample vessels used may still be very hot.
5 During operation, you should never open the heating module itself as the ring-shaped heating reflector or its protective glass can reach 400 °C! If you have to open the heating module e.g. for maintenance, disconnect the instrument from the power supply and wait until the heating module has cooled down completely.
6 No modifications must be made within the heating module. It is particularly dangerous to bend any components or remove them or to make any other changes.

Certain samples require special care!

With certain types of samples, there is a possibility of danger to personnel or damage of property. Please note that the user always has the responsibility and liability for damage caused by use of any types of samples!

⚠ CAUTION

Fire or Explosion

- Flammable or explosive substances.
- Substances containing solvents.
- Substances which evolve flammable or explosive gases or vapors when heated.

1 In cases of doubt, perform a careful risk analysis.
2 Work at a drying temperature that is low enough to prevent the formation of flames or an explosion.
3 Wear protective goggles.
4 Work with small amounts of sample.
5 **Never leave the instrument unattended!**

⚠ WARNING

Substances which contain toxic or caustic components

Toxic gases produced during drying could cause irritations (eyes, Skin, breathing), illness or death.

– Such substances may be dried only in a fume cupboard.

⚠ CAUTION

Corrosion

Substances which evolve corrosive vapors when heated (e.g. acids).

– Work with small amounts of samples as the vapor can condense on cooler housing parts and cause corrosion.

3 Design and Function

3.1 Overview

3.1.1 Heating Module

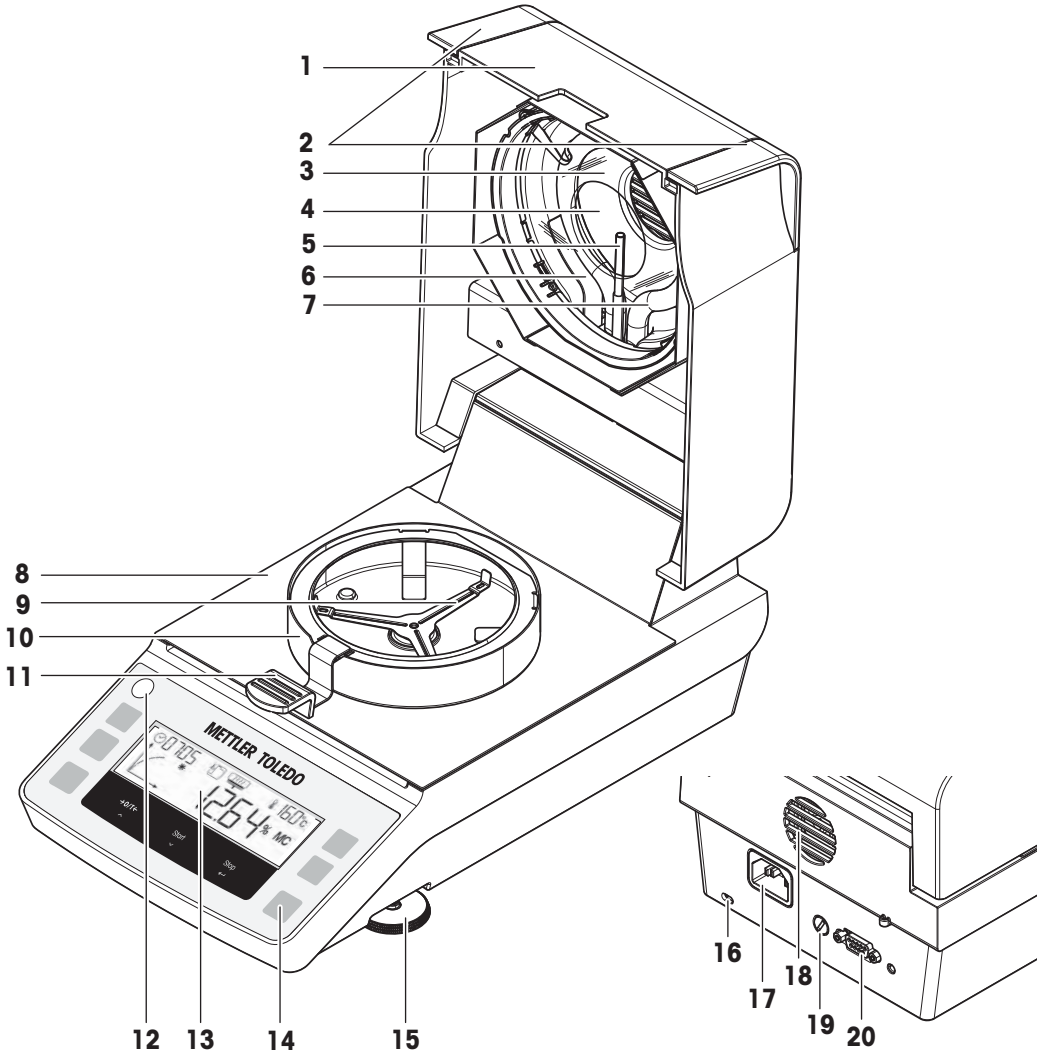

3.1.2 Legend

1	Heating module	**2**	Handles for opening heating module
3	Protective glass	**4**	Reflector
5	Temperature sensor	**6**	Temperature overload protection
7	Halogen lamp	**8**	Sample chamber
9	Sample pan holder	**10**	Draft shield
11	Sample pan handler	**12**	Level indicator
13	Display	**14**	Operation keys
15	Leveling foot	**16**	Slot for antitheft purposes
17	Power supply socket	**18**	Fan
19	Power line fuse	**20**	RS232C serial interface

3.1.3 Operation Keys

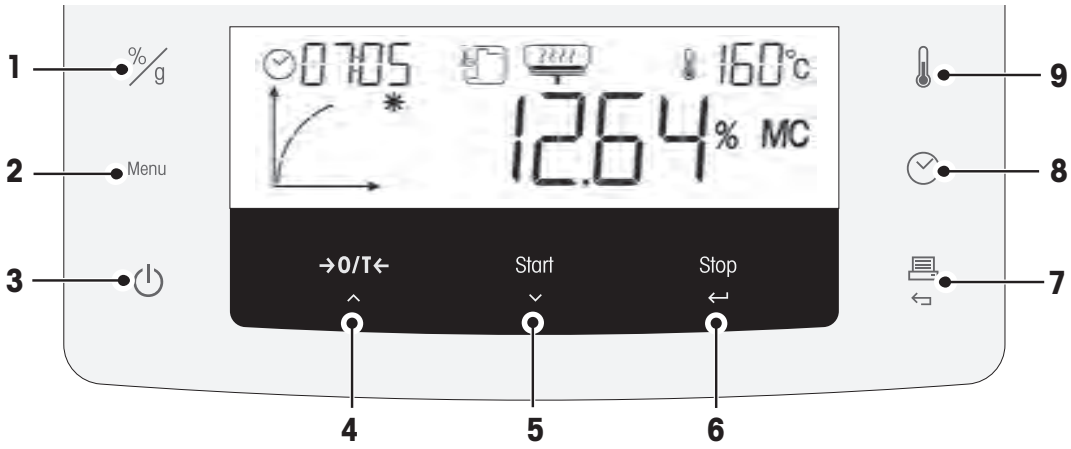

3.1.4 Legend operation keys

No.	Key		Behavior in general	Behavior during drying proces	Behavior in menu mode
1	%/g	Unit	Set the default display mode.	Toggle the display mode.	—
2	Menu	Menu	Enter user menu.	—	Scroll in level 1.
3	⏻	– On – Off	– Switch on. – Switch off into standby mode.	Switch off into standby mode.	
4	→0/T← ∧	– Tare / Zero – Up	Execute tare or zero.	—	Scroll to previous item.
5	Start ∨	– Start – Down	Start drying process.	—	Scroll to next item.
6	Stop ↵	– Stop – Enter	—	Stop drying process.	– Confirm current item. – Down one level.
7	🖶 ⇦	– Print – Cancel / Exit	– Print the parameters and settings.	Print the intermediate value.	Up one level.
9	⏲	Switch-off criterion	Set switch-off criterion.	Display switch-off criteria (Auto or preset time) for 2 seconds.	—
9	🌡	Temperature	Set drying temperature.	Display preset temperature for 2 seconds.	—

3.2 Display

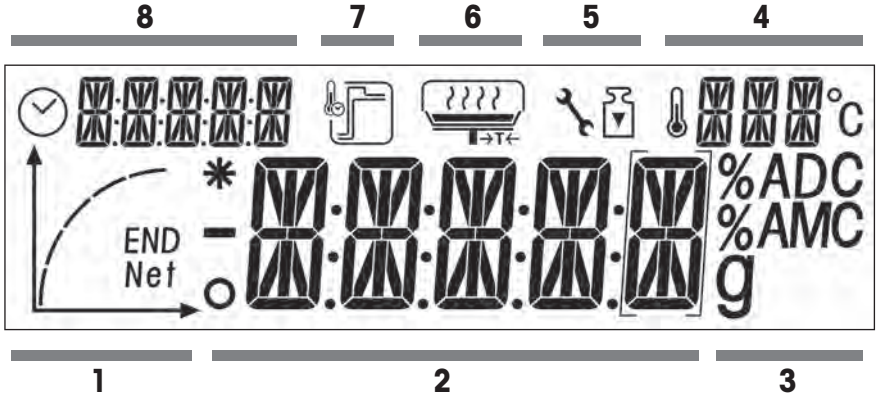

1	Progress indicator area	**2**	Main area
3	Unit area	**4**	Temperature area
5	Service/Adjustment area	**6**	User guidance area
7	Heating mode area	**8**	Time area

Icons			
O	Indicates unstable values		Drying temperature
*	Indicates calculated values	°C	Temperature unit
–	Indicates negative values		Service Mode
	Switch-off criteria: Auto or Time		Weight Adjustment (callibration)
	Drying mode «Standard»		User guidance
	Drying mode «Rapid»	END	Progress indicator
		END	End of moisture determination

Progress indicator

The progress indicator informs you about the state of the drying process.

Status	Diagram	Automatic Switch-off	Timed Switch-off
1	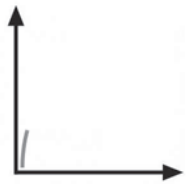	The drying process starts.	The drying process starts.
2		After 30 seconds.	After 1/5 of time.
3		After 1 minute.	After 2/5 of time.
4		When mean weight loss is 1 mg per 15 seconds.	After 3/5 of time.
5		When mean weight loss is 1 mg per 30 seconds.	After 4/5 of time.
6	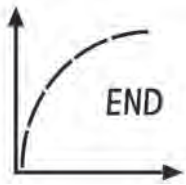	When auto-switch-off is reached. The result and END is displayed.	The total time is reached. The result and END is displayed.

User guidance

This graphical help guides you through the preparation process. It prompts you by flashing to execute the next operating step.

User guidance	Status	Explanation
	Basic weighing	Load the empty sample pan and execute a tare. **Note** Tare is only possible with closed heating module.
	Ready for weighing	Place the sample on the sample pan.
	Close heating module	Close heating module.
	Ready for start	Start the drying process.
	Measurement started, while heating module is still open.	Close heating module.
empty	Drying and measuring	Drying process is running.
empty	Drying complete	Drying process is completed.
empty	Taring	Taring process is running.

4 Installation and Putting into Operation

4.1 Scope of Delivery

Open the package and remove carefully the instrument and the accessories. Check the completeness of the delivery. The following accessories are part of the standard equipment of your Moisture Analyzer.

- 80 aluminum sample pans
- 1 Sample handler
- 1 Sample pan holder (pan support)
- 1 Draft shield
- 1 Specimen sample (circular, absorbent glass fibre filter)
- 1 Power cord (country specific)
- 1 Spare fuse (country specific)
- 1 In use cover
- 1 Application brochure «Guide to Moisture Analysis»
- 1 Operating instructions or User Manual; printed or on CD-ROM, depending on country of use
- 1 CD ROM (Installation videos, Operating Instructions, User Manual, Moisture Guide, SOPs Routine Testing and further information)
- 1 Declaration of conformity

Remove the packaging from the instrument. Check the instrument for transport damage. Immediately inform your METTLER TOLEDO representative if you have any complaints or parts are missing.

Note

Store all parts of the packaging. This packaging guarantees the best possible protection for the transport of your instrument.

4.2 Location

⚠ WARNING

Substances which contain toxic or caustic components

Toxic gases produced during drying could cause irritations (eyes, Skin, breathing), illness or death.

– Such substances may be dried only in a fume cupboard.

Your Moisture Analyzer is a precision instrument. An optimum location guarantees accuracy and dependability. Make sure that the following environmental conditions are met:

- Operate the instrument only indoors and at an altitude of less than 4000 m above sea level.
- Before switching on the instrument, allow all its parts to reach room temperature (+5 to 30°C). Make sure that the relative humidity is between 20% and 80% and non-condensing conditions are met.
- The power plug must be easily accessible.
- Firm, horizontal location as free from vibrations as possible.
- Avoid direct sunlight.
- No excessive temperature fluctuations.
- No powerful drafts.
- Surroundings as free from dust as possible.
- Sufficient clearance around the instrument to allow warm air to dissipate.
- Sufficient distance from heat-sensitive materials in the vicinity of the instrument.

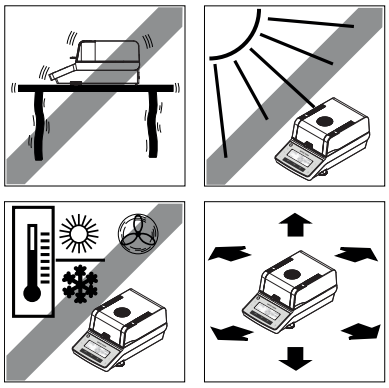

4.3 Assembling the instrument

1 Open the heating module.
2 Place the draft shield (1). Only one position is possible.
3 Place the sample pan holder (2). Turn the sample pan holder until it engages in the correct position.
4 Place the sample pan handler (3).

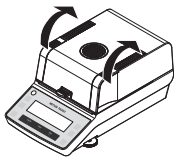

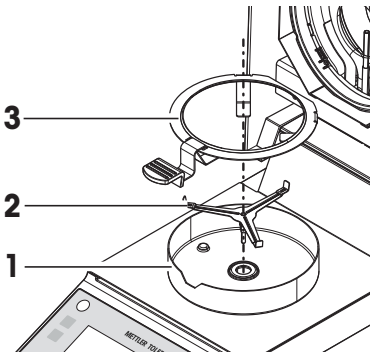

4.4 Connecting the instrument

⚠ WARNING

Risk of electric shock

1 To connect the instrument, only use the supplied three-core power cable with equipment grounding conductor.
2 Only connect the instrument to a three-pin power socket with earthing contact.
3 Only standardized extension cable with equipment grounding conductor must be used for operation of the instrument.
4 Intentional disconnection of the equipment grounding conductor is forbidden.

NOTICE

- Check whether the voltage printed on the type plate matches your local line voltage. If this is not the case, under no circumstances connect the power cable to the power supply, but contact a METTLER TOLEDO representative.

  Two different versions of drying units with country-specific power cable are available (115 V AC or 230 V AC).
- The power plug must be always accessible at all times.
- Prior to use, check the power cable for damage.
- Guide the cables so that they cannot become damaged or interfere with the measuring process.

▪ Instrument is at the final location.
1 Connect the power cable (1) to the power supply socket (2) on the instrument.
2 Connect the power cable (1) to the power line outlet.

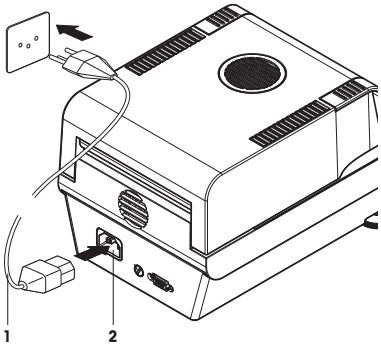

4.5 Setting up the instrument

Note

Allow your instrument to warm up for 60 minutes before performing measurements. The instrument adapts itself to the ambient conditions during this time. When the instrument is in standby mode, no warming-up time is needed after switching on.

Switching on the instrument

1 Instrument is connected to the power supply.

2 To switch on, press [⏻].

⇨ Display appears.

⇨ Instrument is ready to use.

Leveling

Exact horizontal positioning and stable installation are prerequisites for repeatable and accurate results. To compensate for small irregularities or inclinations (±2 %) at the location, the instrument must be leveled.

Note

The drying unit should be re-leveled each time its location is changed.

For exact horizontal positioning, the instrument has a level indicator (level) and 2 leveling screws. When the air bubble in the level indicator is exactly in the center, the instrument is standing perfectly horizontally. To level it, proceed as follows:

1 Position your instrument at the selected location.

2 Turn the two leveling feet until the air bubble is in the center of the level indicator.

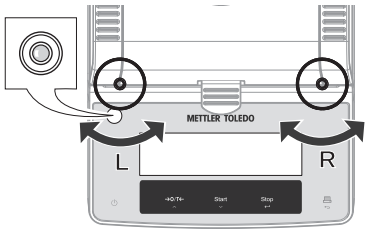

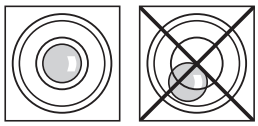

L = left foot
R = right foot

Air bubble at	"12 o'clock"	turn both feet clockwise
Air bubble at	"3 o'clock"	turn left foot clockwise, right foot counter-clockwise
Air bubble at	"6 o'clock"	turn both feet counter-clockwise
Air bubble at	"9 o'clock"	turn left foot counter-clockwise, right foot clockwise

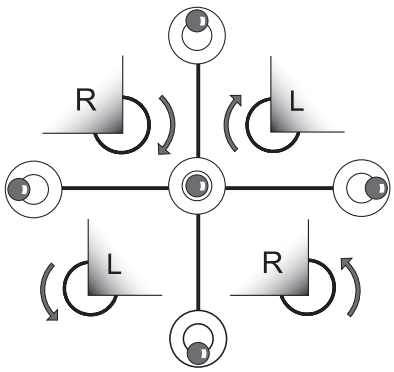

Switching off

– Press [⏻] to switch the instrument off into standby.

4.6 Adjustments

If you have connected a printer to your instrument and this is activated, on completion of the adjustment an adjustment record will be automatically printed out.

4.6.1 Weight Adjustment

Navigation: [**Menu**] > **MENU** > **CAL** > **WEIGH**

In this menu item, you can adjust the balance of your instrument.

NOTICE

- To obtain accurate results, the balance must be adjusted at the point of use under measuring condition in order to match the gravitational acceleration at its location. The instrument must be connected to the power supply for approximately 60 minutes in order to reach operating temperature before adjusting. Adjusting is necessary:
  - before the instrument is used for the first time.
  - after a change of location.
- We advice you to wait at least 30 minutes after a drying operation (or previous heating module adjustment) before performing the adjustment.

Note

You can press [⇐] to stop weight adjustment at any time.

Adjustment procedure

1 Have the required test weight (50 grams) ready.

2 Open the heating module.

3 Remove any load on the sample pan holder including the sample pan.

4 Chose the menu option **CAL** > **WEIGH** and press [↵].

⇨ The instrument tares, the weight icon is displayed and **50.000 g** is flashing.

5 Place the requested test weight in the center of the sample pan holder.

⇨ The display flashes **- - - - - - -** .

6 Remove the test weight when **0.000 g** is flashing.

⇨ The instrument displays successful adjustment with **DONE** and changes to weighing mode.

Sample printout

```
-- BALANCE ADJUSTMENT --
METTLER TOLEDO
Type                HE53
SNR           1234567890
SW                  1.10

Weight ID: .............
Weight          50.000 g

External Adj. done

Date: ..................
Time: ..................
Signature: .............
---------- END ---------
```

4.6.2 Temperature Adjustment

Navigation: [**Menu**] > **MENU** > **CAL** > **TEMP**

This function allows you to adjust the temperature control of the heating module. The adjustment is defined by two points, namely 100 °C and 160°C and takes 30 minutes. You need the optional temperature adjustment set for performing this function. To learn when an adjustment of the heating module is

necessary, see Notes on Adjustment of Balance and Heating Module and Cleaning. We advise you to wait at least 30 minutes after a drying operation (or previous heating module adjustment) before performing an adjustment.

⚠ CAUTION

Danger of burns

After adjustment, the temperature adjustment set and the sample pan handler can still be hot.

– Allow them to cool down before you remove them.

Note

You can stop temperature adjustment at any time by opening the heating module.

Adjustment procedure

1 Chose the menu option **CAL** > **TEMP** and press [↵].

2 Open the heating module.

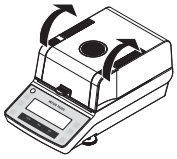

3 Remove the sample pan handler.

4 Remove the sample pan holder.

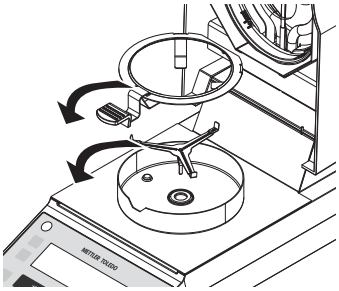

5 Place the sample pan handler with the inserted temperature adjustment disc with precision thermometer in the sample chamber.

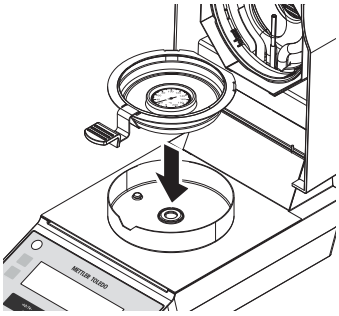

6 Close the heating module to start the adjustment process

⇨ The heating module is heated to a temperature of 100 °C. You can follow this process on the display. The instrument now waits 15 minutes until the temperature adjustment set shows the correct temperature, a repeated beep is given.

7 Read the temperature adjustment set through the inspection window of the heating module.

8 Enter this temperature using [∧] or [∨].

9 After entering the value, press [↵].

Note

The temperature must be entered within 10 minutes after the start of the beep, otherwise the adjustment process will be terminated.

⇨ The heating module now heats to the second temperature (160 °C).

10 Proceed exactly as you did for the first temperature.

11 Confirm your entry with [↵].

⇨ The adjustment is at the end when the instrument displays **DONE** and automatically quits the menu. The adjustment is complete.

12 Open the heating module and allow them to cool down.

13 Remove the sample pan handler with the temperature adjustment disc with precision thermometer.

14 Insert sample pan holder.

⇨ The Instrument is ready for measuring.

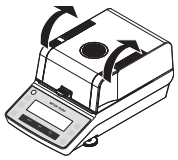

Sample printout

```
-TEMPERATURE ADJUSTMENT-
METTLER TOLEDO
Type                HE53
SNR           1234567890
SW                  1.10

Temp. Reference ID:.....

Temp. 100 °C      101 °C
Temp. 160 °C      159 °C

Temperature Adj.    done

Date: ..................
Time: ..................
Signature: .............
---------- END ---------
```

See also

- Accessories and Spare Parts [▸ 40]
- Notes on Adjustment of Balance and Heating Module [▸ 43]
- Cleaning [▸ 29]

5 Performing a Simple Measurement

After you have successfully put your new Moisture Analyzer into operation for the first time, you can immediately perform your first measurement. In doing so, you will become familiar with the instrument.

Use the supplied specimen sample (absorbent glass fiber filter) for your first measurement to determine the moisture content. During your first measurement the instrument operates with the factory settings.

- The instrument is connected to the mains.

1 To switch on, press [⏻].
   ⇨ The instrument performs a self-test. Wait until the display shows **0.000 g**.

Your Moisture Analyzer has a graphical user guidance which prompts you by flashing to execute the next operating step.

- The instrument is connected to the mains and switched on.
- The instrument is warmed-up.

2 Open the heating module.
   ⇨ The user guidance prompts you to load the empty sample pan.

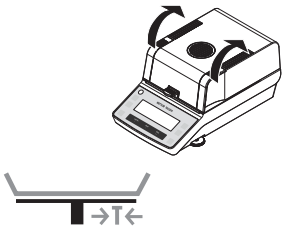

3 Position the empty sample pan in the sample pan handler.

4 Place the sample pan handler in the draft shield. Ensure that the tongue of the sample pan handler lies exactly in the slot of the draft shield. The pan must lie flat in the pan holder.
   Note
   We advise you to work with the sample pan handler at all times. The pan handler is ergonomic, safe and provides protection against burns due to the hot sample pan.

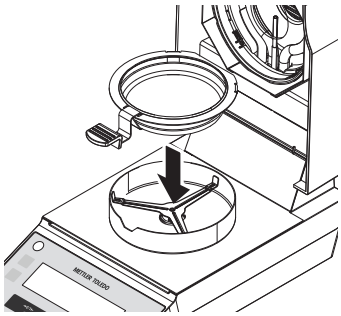

5 Close the heating module.

6 Press [→0/T←].
   ⇨ The balance is set to zero.
   ⇨ The user guidance prompts you to add the sample to the sample pan.

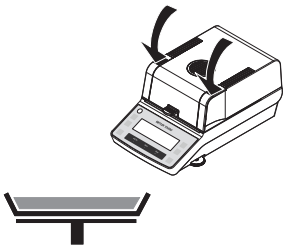

7 Open the heating module.

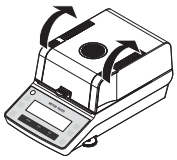

8 Place the provided specimen sample (absorbent glass fibre filter) in the sample pan.

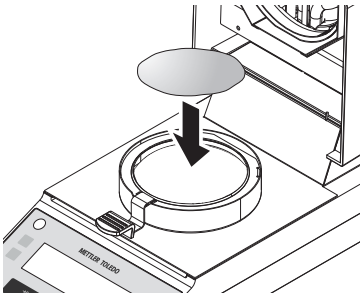

9 Wet the specimen sample with a few drops of water, so that the displayed weight is at least 0.5 grams (required minimum weight of sample)

Note

The drying process cannot start until the minimum sample weight has been reached.

⇨ The user guidance indicates that you can close the heating module.

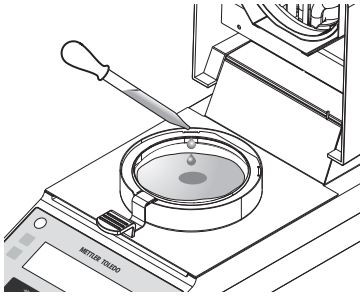

10 Close the heating module.

11 Press [**Start**] to start the drying and measuring process.

⇨ You can follow the measurement progress on the display:
- state of the drying progress (progress indicator).
- current temperature in the sample chamber.
- elapsed time since the start of the measurement process.
- current result in the chosen display mode.

⇨ **Note**

If the heating module is opened during measurement process, the heating will stop and the program will abort.

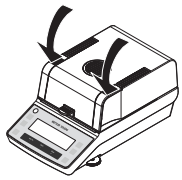

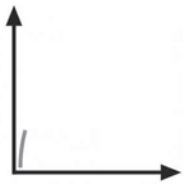

- The measurement process is completed.

12 Read the final result on the display. If a printer is connected, press [🖶] to print the result (if auto printing is not activated).

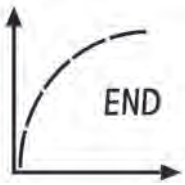

Remove sample

⚠ CAUTION

Danger of burns

Sample, sample pan and other parts inside the sample chamber may still be hot.

1 Open the heating module.

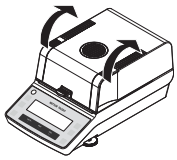

2 Carefully remove the sample handler from the sample chamber.

3 To remove the sample pan from the handler, lift the pan slightly from below and pull it sideways out of the handler. If you no longer need the sample and the pan, you can simply tilt the handler until the pan slides out.

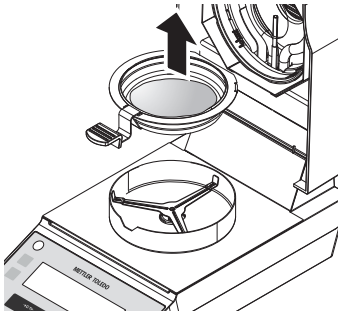

6 User Menu

– Press [Menu] to enter user menu.

Level 1	Level 2	Level 3	Explanation
PROG			Defines the drying program.
	STD		Drying mode: Standard (**Factory setting**)
	RAPID		Drying mode: Rapid
CAL			Adustments (calibration)
	WEIGH		Activate weight adjustment immediately.
	TEMP		Activate temperature adjustment immediately.
PRINT			Defines auto printing
	ON		Auto print is activated. (**Factory setting**)
	OFF		Auto print is inactivated.
P.INT			The Interval printing simulates a [🖶] key press briefly according to the settings. The interval printing starts when the drying process starts and stops when the switch-off criterion is reached.
	OFF		Disables interval printing. (**Factory setting**)
	00:30		Interval time in minutes
	01:00		
	02:00		
	05:00		

Level 1	Level 2	Level 3	Explanation
RS232			Defines the RS232 interface for connecting to a peripheral device e.g. printer or PC. Character set is IBM/DOS. Auto baud rate is supported.
	BAUD		Defines the speed of the data transmission (data transfer rate / baud rate)
		1200	
		2400	
		4800	
		9600	(**Factory setting**)
		19200	
		38400	
	BIT.P		Defines Bit/Parity
		8-N	8 data bits/no parity (**Factory setting**)
		7-N	7 data bits/no parity
		7-E	7data bits/even parity
		7-O	7 data bits/odd parity
		7-M	7 data bits/mark parity
		7-S	7 data bits/space parity
	STOP.B		Defines the stop bits
		1BIT	1 Stop bit (**Factory setting**)
		2BITS	2 Stop bits
	HAND.S		Defines the type of flow control (handshake)
		NONE	No handshake
		SW	Xon/Xoff (**Factory setting**)
		HW	RTS/CTS
	E.O.L.		End of Line character
		CR.LF	<CR><LF> Carriage Return followed by Line feed (ASCII-Codes 013+010) (**Factory setting**)
		CR	<CR> Carriage Return (ASCII-Code 013)
		LF	<LF> Line feed (ASCII-Code 010)

7 Method Definition

A method contains all settings for measuring the moisture content of a particular sample (substance). The optimal setting of parameters and the drying time depends on the type and size of the sample and the desired accuracy of the measurement result. The exact parameters can only be determined experimentally, **see** [How to Obtain Best Results ▸ 43]

You will find more information about defining methods in the delivered application brochure «Guide to Moisture Analysis».

For a method definition, the following parameters can be set:

- Drying program, **see** [Setting the Drying Program ▸ 23]
- Drying temperature, **see** [Setting the Temperature ▸ 23]
- Switch-off criterion, **see** [Setting the Switch-off Criterion ▸ 23]
- Display mode, **see** [Setting the Display Mode ▸ 23]

7.1 Setting the Drying Program

Navigation: [**Menu**] > **MENU** > **PROG**

There are two selections:

Standard drying

Navigation: [**Menu**] > **MENU** > **PROG** > **STD**

This drying program is suitable for most samples. The sample is heated to the drying temperature. (**Factory setting**)

Rapid drying

Navigation: [**Menu**] > **MENU** > **PROG** > **RAPID**

This drying program is primarily suitable **for samples with a moisture content over 30%**. Following the start, to compensate for the cooling due to vaporization and accelerate the drying process, the selected temperature is exceeded by 40% for 3 minutes (however, is possible up to maximum temperature, **see** Technical Data). The drying temperature is then lowered to the set value and maintained.

7.2 Setting the Temperature

This setting defines the drying temperature.

Press [🌡] in basic weighing.

- Factory setting: 105 °C
- Setting range: see Technical Data

7.3 Setting the Switch-off Criterion

The switch-off criterion defines when the instrument should end the drying process.

Press [⏲] in basic weighing.

AUTO	This setting is suitable for most kind of samples. Switch-off is based on a weight loss per unit of time. (**Factory setting**)
TIMED	Switch-off is based on a preset time. 1 up to 120 minutes are possible in steps of 10 seconds. (The time increases or decreases by pressing and holding [∧] or [∨].

7.4 Setting the Display Mode

The display mode defines the type of value for displaying and printing.

Press [%/g] in basic weighing.

The following types are available:

%MC	Moisture Content (calculated value)
%DC	Dry Content (calculated value)
%AM	ATRO Moisture Content (calculated value)
%AD	ATRO Dry Content (wet weight, calculated value)
g	Weight in grams

Note
Calculated values are indicated with an asterisk in the display.

Detailed information

g – Weight in Grams

The weight of the sample is displayed (and printed out) in grams. With this setting, the Moisture Analyzer is used as a precision balance.

During the measurement current weight is constantly displayed in grams.

%MC – Moisture Content

The moisture content of the sample is displayed (and printed out) as a percentage of the wet weight (WW = initial weight = 100 %). This is the **factory setting**.

During the measurement the value is constantly displayed in percent. The measured value is marked by "%MC" (Moisture Content, e.g. 11.35 %MC) also for the printed results.

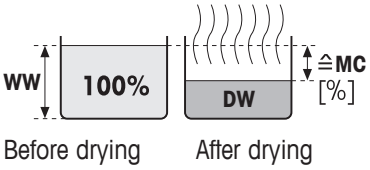

$$MC = \frac{WW - DW}{WW} \cdot 100\ \%$$

MC = Moisture Content [0…100 %]
WW = wet weight
DW = dry weight

%DC – Dry Content

The dry content of the sample is displayed (and printed out) as a percentage of the wet weight (WW = initial weight = 100 %).

During the measurement the value is constantly displayed in percent. The measured value is marked by "%DC" (Dry Content, e.g. 88.65 %DC) also for the printed results.

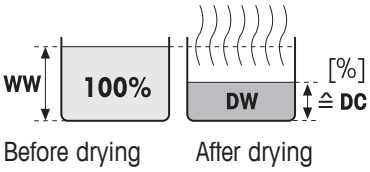

$$DC = \frac{DW}{WW} \cdot 100\ \%$$

DC = dry content [100…0 %]
WW = wet weight
DW = dry weight

%AM – ATRO Moisture Content [1)]

The moisture content of the sample is displayed (and printed out) as a percentage of the dry weight (DW = final weight = 100 %)

During the measurement the value is constantly displayed in percent. The measured value is marked by "%AM" (ATRO Moisture Content, e.g. 255.33 %AM) also for the printed results.

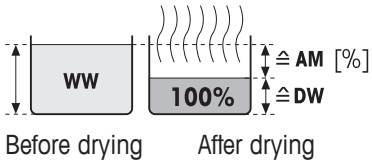

$$AM = \frac{WW - DW}{DW} \cdot 100\ \%$$

AM = ATRO moisture content [0…1000 %]
WW = wet weight
DW = dry weight

%AD – ATRO Dry Content (Wet weight)[1)]

The wet weight of the sample is displayed (and printed out) as a percentage of the dry weight (DW = final weight = 100 %)

During the measurement the value is constantly displayed in percent. The measured value is marked by "%AD" (ATRO Dry Content, e.g. 312.56 %AD) also for the printed results..

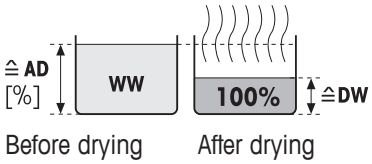

$$AD = \frac{WW}{DW} \cdot 100\ \%$$

AD = ATRO dry content [100…1000 %]
WW = wet weight
DW = dry weight

[1)] **Comment on the ATRO display mode**

If the current measured value in the ATRO display mode is greater or less than the predefined limit value (i.e. greater than 999.99 %AD or less than –999.99 %AM), the ATRO result values are limited to 999.99%.

8 Performing a Measurement

You are now familiar with the method parameters of your instrument and have defined your own method for your samples. The instrument is now ready for the determination of the moisture content of your own samples. In this section you will learn how to perform measurements, print the measurement result and stop the measurement process.

- The instrument is connected to the mains and switched on.
- The instrument is warmed-up.

1 Open the heating module.
   ⇨ The user guidance prompts you to load the empty sample pan.

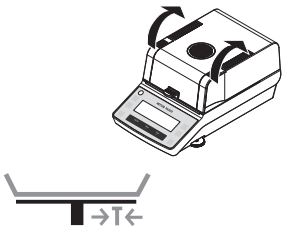

2 Position the empty sample pan in the sample pan handler.
3 Place the sample pan handler in the draft shield. Ensure that the tongue of the sample pan handler iies exactly in the slot of the draft shield. The pan must lie flat in the pan holder.
   Note
   We advise you to work with the sample pan handler at all times. The pan handler is ergonomic, safe and provides protection against burns due to the hot sample pan.

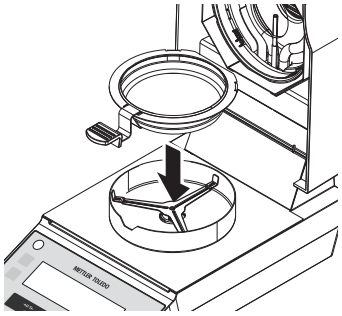

4 Close the heating module.
5 Press [→0/T←]
   ⇨ The balance is set to zero.
   ⇨ The user guidance prompts you to add the sample to the sample pan.

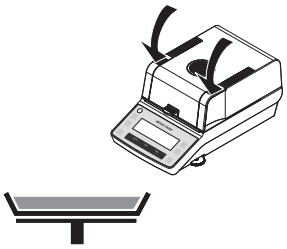

6 Open the heating module.

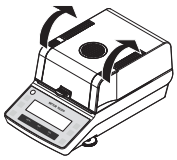

7 Add the sample to the sample pan. Ensure that the sample is distributed evenly to optain good analysis results.
   Note
   The minimum sample weight required is 0.5 g. To obtain the best possible reproducibility of results, the sample quantity weighed in should be similar as possible (e.g. within a target weight tolerance of approximately 10%)
   ⇨ The user guidance indicates that you can now start the drying process.

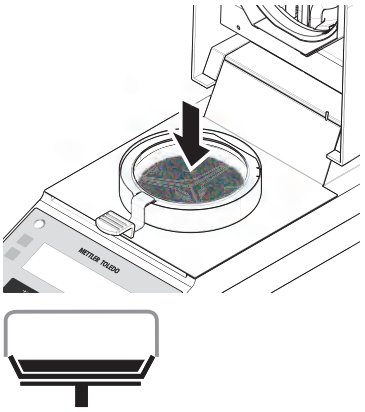

8 Close the heating module.

9 Press [**Start**] to start the drying and measuring process.

⇨ You can follow the measurement progress on the display:
– state of the drying progress (progress indicator).
– current temperature in the sample chamber.
– elapsed time since the start of the measurement process.
– current result in the chosen display mode.

⇨ **Note**
If the heating module is opened during measurement process, the heating will stop and the program will abort.

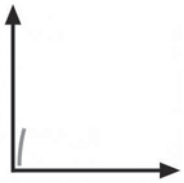

- The measurement process is completed.

10 Read the final result on the display. If a printer is connected, press [🖶] to print the result (if autoprinting is not activated).

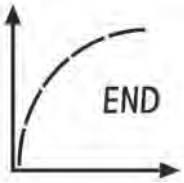

Remove sample

⚠ CAUTION

Danger of burns

Sample, sample pan and sample pan holder may still be hot.

1 Open the heating module.

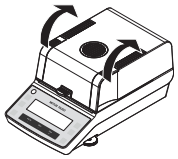

2 Carefully remove the sample handler from the sample chamber.

3 If you do not wish to perform another measurement, press [⏻] to switch the instrument off and close the heating module.

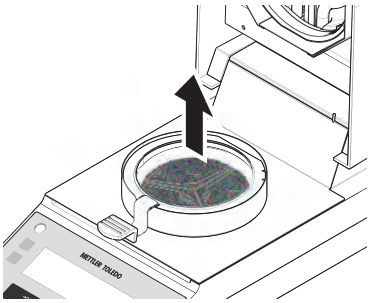

Stop measurement

When [**Stop**] is pressed, the measurement is aborted, display shows **ABORT**.

Sample printout

```
-MOISTURE DETERMINATION-
METTLER TOLEDO
Type                HE53
SNR           1234567890
SW                  1.10

Drying Prog     Standard
Drying Temp.      100 °C
Switch-off         Timed
Time           10:30 min
Display mode         %MC

Start weight     2.345 g

Total Time    10:30 min
Dry Weigh        1.934 g
End Result     17.53 %MC

Date: ..................
Time: ..................

Comment: ...............
Signature: .............
---------- END ---------
```

9 Maintenance

⚠ WARNING

Risk of electric shock

– The instrument must be disconnected from the power supply, before cleaning or other maintenance work to be performed.

– Use only the power cord from METTLER TOLEDO, if it needs replacing.

Note

- The thermal overload protection can not be reset by the user.
- The halogen lamp can not be replaced by the user.

In such cases, contact your METTLER TOLEDO representative.

For weight and temperature adjustments, **see** [Adjustments ▸ 14].

9.1 Cleaning

⚠ CAUTION

Danger of burns

The interior parts of the heating module as well as the parts in the sample chamber could be very hot.

– Wait until the heating module has cooled down completely.

To obtain precise measurement results, we recommend you to **clean the temperature sensor** and **the protective glass** of the halogen lamp regularly. The **air inlet** of the fan is located at the rear of the instrument and its exterior should be cleaned from time to time to free it from any dust deposits. The **draft shield** and **sample pan holder** can be removed for cleaning. **See** [Overview ▸ 7] for the location of the parts. Please note the following directions for cleaning your instrument.

General

Your Moisture Analyzer is made from high quality, resistant materials and can therefore be cleaned with a commercially available, mild cleaning agent e.g. isopropanol.

NOTICE

- Use a lint-free cloth for cleaning.
- Do not use wet, but only damp cloth for cleaning.
- Ensure that no liquids enters the interior of the instrument.
- Clean the exterior of the heating module with a mild cleaning agent although the housing is extremely rugged and resistant to solvents.
- On no account use cleaning agents, which contain solvents or abrasive ingredients, as this can result in damage to the operation panel overlay.
- Never open the housing of the instrument – it contains no components, which can be cleaned, repaired or replaced by the user.

Cleaning temperature sensor and protective glass

1 Open the heating module (1).
2 Check the protective glass (2) and the temperature sensor (3) if they need to be cleaned.
3 If the protective glass (2) appears dirty, clean the surface using a commercial glass cleaner.
4 If the temperature sensor (3) is dirty, clean using a mild cleaning agent.

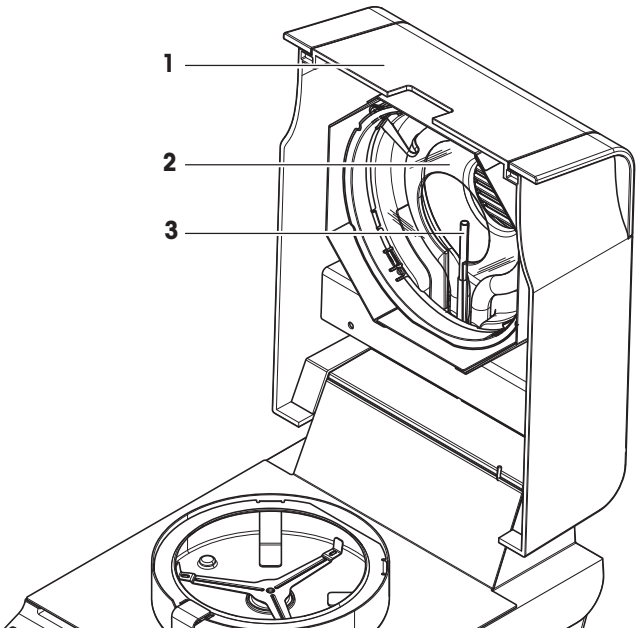

Removing glass for cleaning inside

If cleaning behind the glass or the backside of the glass is needed, the reflector ring (glass holder) with the protective glass must be removed.

1 Remove carefully the four screws (1) as shown.
2 Remove the reflector ring (2) (glass holder) with the protective glass (3).
3 Put the glass (3) on a flat surface and clean with a commercial glass cleaner on both sides.
4 Clean the temperature sensor (4) with a mild cleaning agent.
5 Reassemble after cleaning.
Note
Make sure that the glass opening is face down.

NOTICE
Do not touch the lamp with your fingers. If it happened, clean the lamp carefully with e.g. isopropanol.

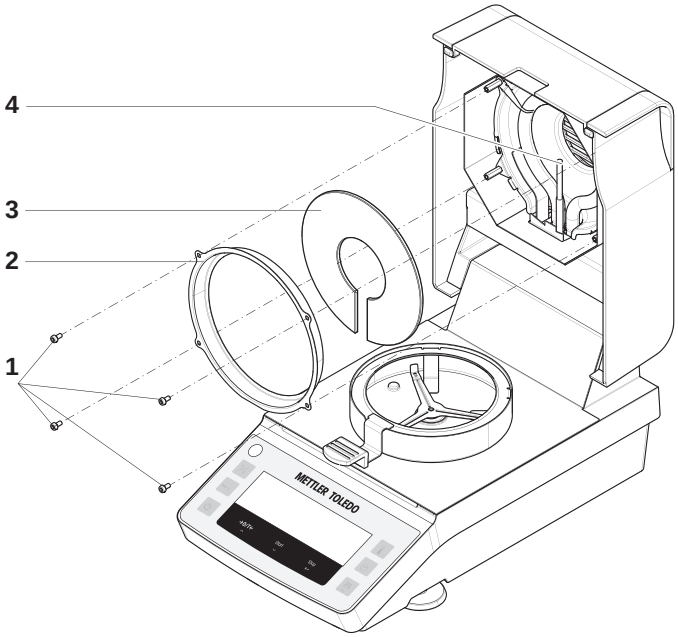

Note

After the temperature sensor or the protective glass have been cleaned, we recommend to adjust the heating module using the temperature adjustment kit, **see** [Temperature Adjustment ▸ 15].

9.2 Replacing power line fuse

⚠ CAUTION

Safety risk or damage of the instrument

Do not use a fuse of a different type or rated value, or short out (bridge) the fuse, because this can put your safety at risk and damage the instrument!

If the display of your terminal remains dark after switching on, in all probability the power line fuse is blown.

The power line fuse is located on the back of the drying unit. To change this fuse, proceed as follows:

1 Pull out the power cord.
2 Unlock the fuse holder by turning counterclockwise using a suitable tool e.g. screwdriver.
3 Pull it out.
4 Remove the fuse and check its condition.
5 If the fuse is blown, replace the fuse with one of the same type and the same rated value:
for 115 V: 5 x 20 mm, F6.3AL250V (6.3 A , fast-acting, low-breaking capacity)
for 230 V: 5 x 20 mm, F2.5AL250V (2.5 A, fast-acting, low-breaking capacity)
6 Insert the fuse holder and lock it by turning clockwise.

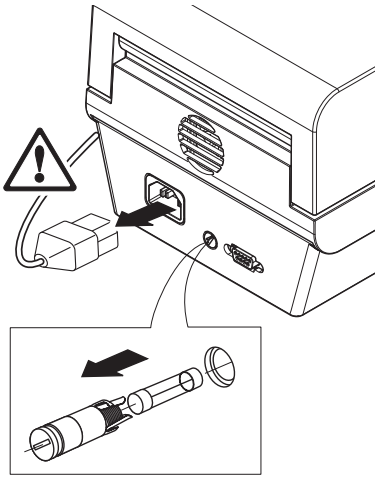

9.3 Disposal

In conformance with the European Directive 2002/96/EC on Waste Electrical and Electronic Equipment (WEEE) this device may not be disposed of in domestic waste. This also applies to countries outside the EU, per their specific requirements.

Please dispose of this product in accordance with local regulations at the collecting point specified for electrical and electronic equipment. If you have any questions, please contact the responsible authority or the distributor from which you purchased this device. Should this device be passed on to other parties (for private or professional use), the content of this regulation must also be related.

Thank you for your contribution to environmental protection.

10 Troubleshooting

10.1 Error Messages

Error messages in the display draw your attention to incorrect operation or that the instrument could not execute a procedure properly.

Message on Display	Beeper message	Cause	Rectification
┌------┐	no	Overload – The weight on the pan exceeds the weighing capacity of the balance.	– Reduce the weight of the sample.
└------┘	no	Underload – Sample pan holder is missing.	– Insert sample pan holder. If needed, reboot the system by disconnecting and connecting to the mains.
0.000 g	no	Weight display flashes / Out of zero range – When the instrument was switched on or upon zeroing, one or more limits were exceeded. The usual reason for this message to appear is when there is a weight on the weighing pan when the balance is switched on.	– Remove the weight.
CLOSE	◀	Tare executed with open heating module.	– Close heating module.
TARE	◀	Missing tare weight	– Tare empty pan and load pan with sample before starting the drying.
ERR.01	◀	No stability during adjustment or during taring or getting the initial sample weight with closed heating module.	1 Ensure ambient conditions and an optimum location. 2 Take care that no part of the sample or the sample pan touches the draft shield or the sample pan handler. 3 Ensure that the sample pan holder is correctly installed as well as not defect. 4 Highly volatile substances in the sample also prevent a stable weighing result being detected since the sample is continuously losing weight.
ERR.02	◀	Wrong adjustment weight on the pan. Either no weight, or the wrong weight, has been placed on the sample pan during adjustment. (This message is also displayed if you do not remove the weight when prompted to do so by the instrument.)	– Repeat the adjustment process and load the required adjustment weight.

Message on Display	Beeper message	Cause	Rectification
ERR.03		Sample weight out of tolerance.	– Enlarge or reduce the sample weight. The acceptable range of the sample weight is 0.5 g to 54 g.
ERR.08		Temperature entry missing. The temperature adjustment was aborted due to lack of input (timeout).	– Repeat the temperature adjustment.
ERR.10		The current detected temperature is higher that the target temperature.	– Wait until heating module has cooled down.
ERR.11		Over heating – the heating module exceeds the maximum temperature.	1 Wait until heating module has cooled down. 2 If the error still occurs, please contact METTLER TOLEDO representative.
ERR.12		Wrong cell data.	Please contact METTLER TOLEDO representative.
ERR.13		Program memory is defective.	Please contact METTLER TOLEDO representative.
ERR.14		Temperature sensor of load cell is defective.	Please contact METTLER TOLEDO representative.
ERR.15		Temperature sensor of heating module is defective.	Please contact METTLER TOLEDO representative.
ERR.16		Wrong load cell brand.	Please contact METTLER TOLEDO representative.
ERR.17		Wrong type data set.	Please contact METTLER TOLEDO representative.

Legend

	Non-critical error	Quick beep for three times
	Critical error	Quick beep repeatedly
	Urgent error	Long beep repeatedly

10.2 What to Do if…

Symptom	Countermeasure
Display remains dark after switching on	• Ensure that the instrument is connected to the power supply and the power is on. • Check the power line fuse and replace if necessary, **see** [Replacing power line fuse ▸ 31]. • If the problem persists, contact a METTLER TOLEDO representative.
Keys and buttons do not respond	• Reboot the system by disconnecting and connecting to the mains. • If the problem persists, contact a METTLER TOLEDO representative.
Printer that is connected does not print	• Ensure that the printer is properly connected. • Ensure that the printer is on and enabled in the menu. **See** [User Menu ▸ 21] • Check the printer settings.
Incorrect characters are printed	• Change the bit/parity setting of the printer and the instrument to 8/NO. • Check if both instruments have the same baud rate setting, **see** [User Menu ▸ 21].
Measurement takes too long	• You have defined an unsuitable switch-off criterion, **see** [Method Definition ▸ 23]. • An excessive amount of sample can also be the cause of slow drying, likewise samples which tend to form a skin which hinders vaporization. Perform a measurement at higher temperature. • Enlarge the surface of the sample, e.g. by crushing or grinding. • Use absorbent glass fiber filters for liquids. • If the sample is very temperature sensitive and decomposes, reduce the temperature. • If measuring is unstable, check correct positioning of pan, sample handler, sample, draft shield or sample holder.
Instrument does not heat after the start	• Ensure that the heating module is closed. • Halogen lamp is defective or the heating module is overheated and the thermal overload protection has switched off the heating. In this case, contact your METTLER TOLEDO representative.

Symptom	Countermeasure
Measurement results are not repeatable	• Support on which the instrument is standing is not sufficiently stable. Use a stable support. • Surroundings are very unstable (e.g. vibrations, air draft, humidity). Provide better environmental conditions. • Sample has more or less moisture between sampling and starting the drying process. • Sample is not evenly dispersed on the pan. • Start weight has not always the same value. • Samples are not homogeneous, i.e. they have different compositions. The more inhomogeneous a sample, the larger the amount of sample needed to obtain a repeatable result. • Sample does not become completely dry (e.g. awing to skin formation). Dry the sample with the aid of glass fiber discs. • Selected temperature is too high and the sample has oxidized or decomposed. Lower the drying temperature. • Sample boils and the splashed drops continuously change the weight. Lower the drying temperature. • Granulation is not homogeneous or too large. • Insufficient heating power because the protective glass of the halogen lamp is dirty. Clean the protective glass, **see** [Cleaning ▸ 29]. • Temperature sensor is contaminated or faulty. Clean the temperature sensor, **see** [Cleaning ▸ 29]. • If the problem persists, contact a METTLER TOLEDO representative.

11 Technical Data

11.1 General data

Power Supply

115 V AC Version		100 V–120 V AC, 50/60 Hz, 4 A
230 V AC Version		200 V–240 V AC, 50/60 Hz, 2 A
Voltage fluctuations		-15%+10%
Power load radiator		max. 400 W during drying process
Power line fuse	115 V:	5 x 20 mm, F6.3AL250V (6.3 A, fast-acting, low-breaking capacity)
	230 V:	5 x 20 mm, F2.5AL250V (2.5 A, fast-acting, low-breaking capacity)

Protection and Standards

Overvoltage category	II
Degree of pollution	2
Standards for safety and EMC	see Declaration of Conformity (part of standard equipment)
Range of application	for use in dry interior rooms

Environmental Conditions

Height above sea level	up to 4000 m
Ambient temperature range	Operation: +10 °C to 30 °C (operability guaranteed 5 °C to 40 °C) Storage: -20 °C to +60 °C
Relative air humidity	Operation: 10% to 80% up to 31 °C, linearly decreasing to 50 % at 40 °C, noncondensing Storage: 20% to 80%
Warm-up time	At least 60 minutes after connecting the instrument to the power supply; when switched on from standby, the instrument is ready for operation immediately.

Materials

Heating module

Housing	Plastic, PBT, Crastin SO653-GB20
Inspection window grill	Plastic, PPS A504X90 (UL94-V0)
Protective glass	Glass ceramics
Halogen lamp	Quartz glass
Reflector	Stainless steel, X2CrNiMo17-2 (1.4404)
Reflector bracket	Plastic, PPS A504X90 (UL94-V0)
Draft shield, interior bottom plate	Stainless steel, X2CrNiMo17-2 (1.4404)

11.2 Model-specific data

Heating module

Heating Module	Halogen ring-shaped radiator
Temperature range	50–160 °C
Temperature programs	standard, rapid

Balance

Maximum capacity	54 g
Readability	0.001 g
Minimum sample weight	0.5 g
Adjustment	External weight

Moisture Content

Readability	0.01%
Repeatability (sd) with 2 g sample	max. 0.15%
Repeatability (sd) with 10 g sample	max. 0.05%

Interfaces

	1 x RS232C (9-pin socket)

Hardware

Leveling	2 leveling screws, Level indicator
Sample pan	Ø 90 mm
Maximum height of sample	25 mm
Thermal overload protection	Bimetallic-element switch in heating module
Dimensions with the heating module closed (w x h x d)	183 x 161 x 334 mm **See** [Dimensions ▸ 38]
Weight	4.1 kg

11.3 Dimensions

All dimensions in mm

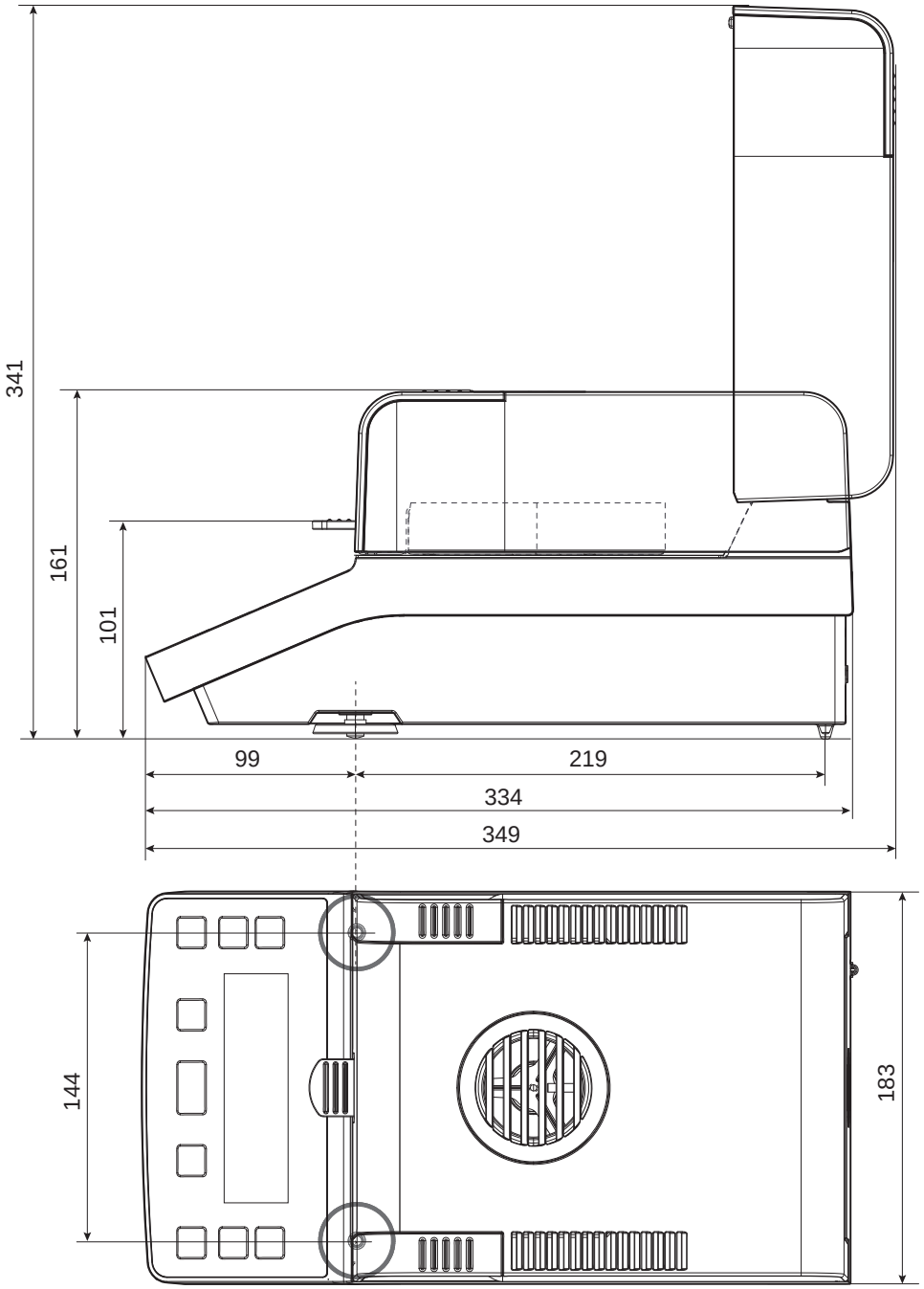

11.4 Interface Specification

RS232C

Schematic	Item	Specification
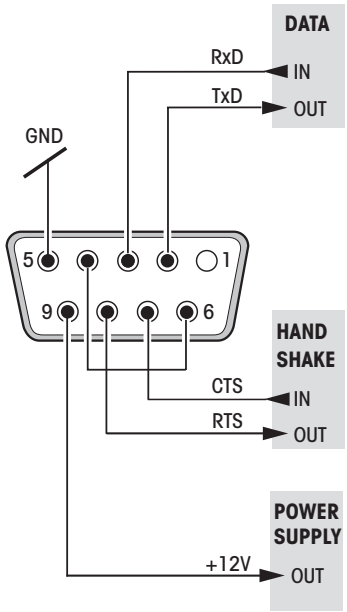	Interface type	Voltage interface according to EIA RS-232C/ DIN66020 CCITT V24/V.28)
	Max. cable length	15 m
	Signal level	Outputs: +5 V … +15 V (RL = 3–7 kΩ) –5 V … –15 V (RL = 3–7 kΩ) Inputs: +3 V … +25 V –3 V … -25 V
	Connector	Sub-D, 9-pole, female
	Operating mode	Full duplex
	Transmission mode	Bit-serial, asynchronous
	Transmission code	ASCII
	Baud rates	see setting options
	Bits/parity	see setting options
	Stop bits	see setting options
	Handshake	None, XON/XOFF, RTS/CTS (software selectable)
	Power supply for optional devices	+ 12 V, max 150 mA (only if pin 1 is connected to Ground)

12 Accessories and Spare Parts

Description	Part No.
Power supplies	
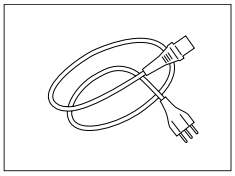 Country-specific 3-Pin power cable with grounding conductor.	
Power cable AU	00088751
Power cable BR	30015268
Power cable CH	00087920
Power cable CN	30047293
Power cable DK	00087452
Power cable EU	00087925
Power cable GB	00089405
Power cable IL	00225297
Power cable IN	11600569
Power cable IT	00087457
Power cable JP	11107881
Power cable TH, PE	11107880
Power cable US	00088668
Power cable ZA	00089728
Cables for RS232 interface	
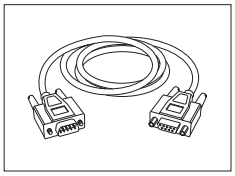 RS9 – RS9 (m/f): connection cable for PC, length = 1 m	11101051
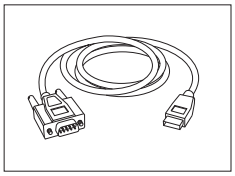 RS232 - USB converter cable – Cable with converter to connect a balance (RS232) to a USB port	64088427
Printers	
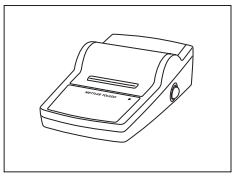 RS-P25 printer with RS232 connection to instrument	11124300
Paper roll (length: 20 m), set of 5 pcs	00072456
Paper roll (length: 13 m), self-adhesive, set of 3 pcs	11600388
Ribbon cartridge, black, set of 2 pcs	00065975
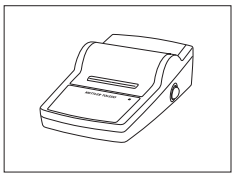 RS-P26 printer with RS232 connection to instrument (with date and time)	11124303
Paper roll (length: 20 m), set of 5 pcs	00072456
Paper roll, self-adhesive (length: 13 m), set of 3 pcs	11600388
Ribbon cartridge, black, set of 2 pcs	00065975

Sample Pans

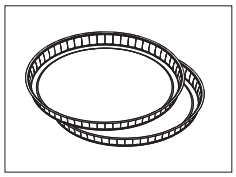	Aluminum sample pan, HA-D90, set of 80 pcs	00013865
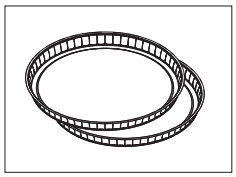	Professional aluminum sample pan, extra strong, set of 80 pcs	11113863
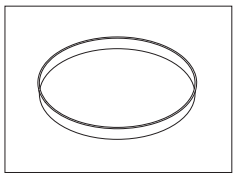	Stainless steel reusable sample pan 6 mm, DA-DR1, set of 3 pcs	00214462
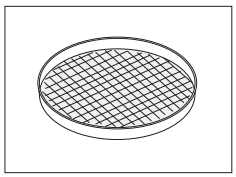	Weighing pan for textiles HA-CAGE, 1 pcs	00214695

Adjustment / Test Parts

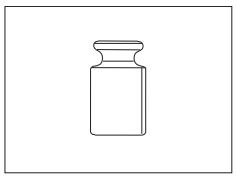	Adjustment weight, 50 g (F1)	11119460
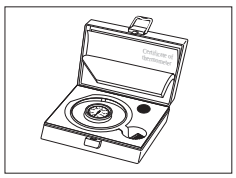	Temperature adjustment kit HE-TCC, certified	30134141
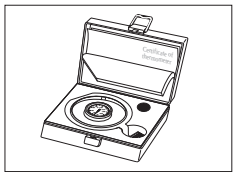	Temperature adjustment kit HE-TC	30134140

Miscellaneous

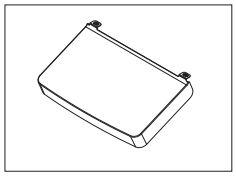	In use cover	30209145

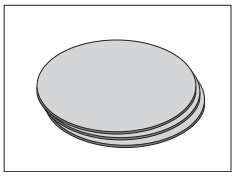

Glass fiber filter (for Liquids), set of 100 pcs 00214464

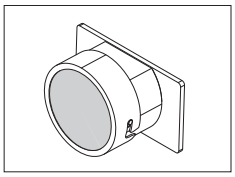

HC dust filter housing 30216118

Spare Parts

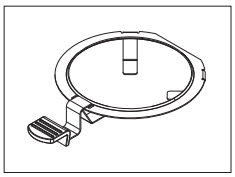

Sample pan handler 30104816

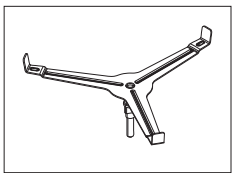

Sample pan holder 00214642

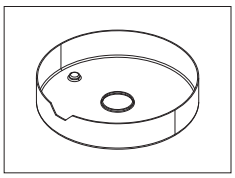

Draft Shield 30104817

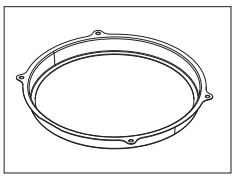

Reflector ring 30104847

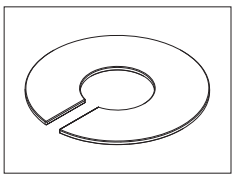

Protective Glass 30104845

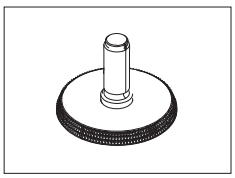

Leveling feet (2 pcs) 30104835

13 Appendix

13.1 How to Obtain Best Results

In this section you will find important information on how to obtain optimum results. You will discover which parameters influence the measurement process and how you can optimize the settings of your instrument to achieve the best measurement results.

13.1.1 Measurement Principle of Halogen Moisture Analyzer

Your instrument performs measurements based on the **thermogravimetric principle**, i.e. the moisture is determined from the weight loss of a sample dried by heating.

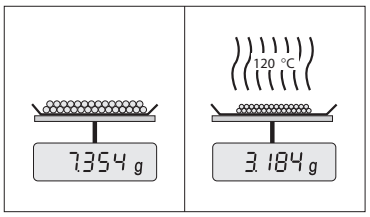

In principle, your instrument thus comprises two instruments: An analytical balance and a heating module. In contrast to other thermogravimetric methods (drying oven, infrared, microwave), the Halogen Moisture Analyzer operates with halogen heating technology. This ensures fast heating of the sample and thus guarantees rapid availability of the measurement results.

Irrespective of the measurement method, a correct preparation of the sample and the correct choice of the following measurement parameters improve the quality of the measurement result:

- Sample size
- Drying temperature
- Switch-off mode
- Drying time

NOTICE

Inappropriate setting of these parameters can cause the results to be incorrect or misleading. For this reason, check that the results for each type of sample are what might reasonably be expected.

You will find detailed information on the relationships between these parameters in the delivered application brochure «Guide to Moisture Analysis».

In practice not only the quality of the measurement results, but also the speed of the measurement process is important. Thanks to its drying principle (heat generated by a halogen radiator), the Halogen Moisture Analyzer is very fast. You can increase the speed even further through optimum setting of the instrument, e.g. using the drying program «Rapid».

The optimum drying temperature and the drying time are dependent on the nature and size of the sample and on the desired accuracy of the measurement results. These can be determined only by experiment.

13.1.2 Notes on Adjustment of Balance and Heating Module

The instrument can be adjusted using appropriate accessories.

A Moisture Analyzer is typically used in place of or in addition to the drying oven method. In an oven heat energy is transferred by the flow of air, which establishes an equilibrium between the sample temperature and the ambient temperature. This is not the case in a Moisture Analyzer. The actual sample temperature primarily depends on the specific absorption properties of the sample (dark samples absorb more heat), which can change during the measurement process. There can also be differences between the temperature at the surface of the sample and the temperature inside the sample. The heat output is therefore not dependent on the true sample temperature but instead is regulated by a temperature sensor underneath the halogen heating module.

For the reasons explained above, the sample temperature will be slightly different than the temperature shown on the instrument display. By regularly testing or adjusting the drying unit, you will ensure a consistent and reproducible heat output for the entire lifetime of your instrument.

Note

- METTLER TOLEDO offers an adjustment service – please contact your METTLER TOLEDO representative.
- We recommend to adjust the instrument exclusively under operating conditions.

- After the temperature sensor or the protective glass have been cleaned, we recommend adjusting the heating module using the temperature adjustment kit, **see** Accessories and Spare Parts. For the procedure for testing or adjusting the drying unit (balance/heating module), **see** Test/Adjust.

13.1.3 Optimum Sample Preparation

Preparation of the sample is decisive for the speed of the measurement process and the quality of the measurement results.

Note

Basic rules for the preparation of your sample:
The amount of sample you select should be as small as possible and only as large as necessary.

Excessive amounts of sample require more time for drying and thus prolong the measurement process. If the amount of sample is too small, the measurement result may possibly not be representative of the true moisture content. The following always holds: The greater the inhomogeneity of the sample, the larger the amount of sample needed to obtain a repeatable result .

Distribute the sample evenly over the sample pan

You thus increase the surface area of the sample and facilitate heat absorption. The base of the pan should be evenly covered.

With liquid, fat-containing, melting and highly reflecting samples, you should use the sample with the glass fiber filter available as optional equipment, **see** [Accessories and Spare Parts ▸ 40]. This also applies to samples which form a skin on their surface when heated. The glass fiber filter ensures even and rapid heat distribution and prevents the formation of a skin on the sample surface.

13.1.4 Further Information on Moisture Determination

You will find further information on the moisture determination, the importance of the parameters and the preparation of the samples in the delivered application brochure «Guide to Moisture Analysis» dealing with moisture determination, **see** [Accessories and Spare Parts ▸ 40].

Useful tips and a variety of example methods (comparison between Halogen Moisture Analyzer results and the oven drying method) can be downloaded from:

▶www.mt.com/moisture

If you require information on specific applications, your METTLER TOLEDO Customer Service will be pleased to help you.

NOTICE
Moisture determination applications must be optimized and validated by the user according to local regulations. Application-specific data provided by METTLER TOLEDO is intended for guidance only.

13.2 MT-SICS Interface Commands and Functions

Many of the instruments and balances used have to be capable of integration in a complex computer or data acquisition system.

To enable you to integrate balances in your system in a simple manner and utilize their capabilities to the full, most balance functions are also available as appropriate commands via the data interface.

All new METTLER TOLEDO balances launched on the market support the standardized command set "METTLER TOLEDO Standard Interface Command Set" (MT-SICS). The commands available depend on the functionality of the balance.

For further information please contact your METTLER TOLEDO representative.

For further information please refer to the Reference Manual MT-SICS downloadable from the Internet under

▶ www.mt.com/moisture

Index

W

GWP®

Good Weighing Practice™

GWP® is the global weighing standard, ensuring consistent accuracy of weighing processes, applicable to all equipment from any manufacturer It helps to:

- Choose the appropriate balance or scale
- Calibrate and operate your weighing equipment with security
- Comply with quality and compliance standards in laboratory and manufacturing

www.mt.com/GWP

www.mt.com/moisture

For more information

Mettler-Toledo GmbH
Im Langacher 44
8606 Greifensee, Switzerland
www.mt.com/contact

30090236D en

* 3 0 0 9 0 2 3 6 *