Operating instructions

Page 8 EN

Freezer

Read the operating instructions before switching on for the first time

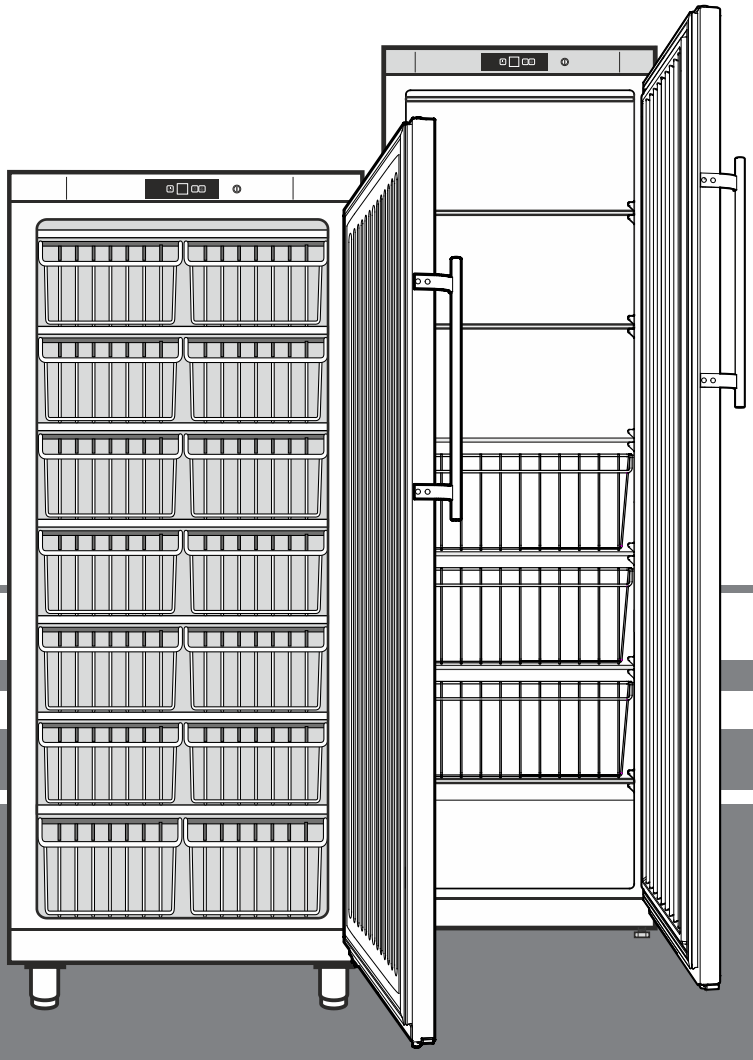

7085 375-00

GG 40_GG 52

LIEBHERR

Content

Description of the appliance 8
Disposal notes 8
Safety instructions and warnings 9
Range of appliance use 9
Noise emissions from the appliance 9
Climate rating 10
Setting up 10
Appliance dimensions 10
Electrical connection 10
Operating and control elements 11
Switching the appliance on and off 11
Setting the temperature 11
Door open alarm 11
Temperature alarm 11
Power failure display 11
Setup mode 11
Defrosting 12
Cleaning 12
Malfunctions 12
Shutting your appliance down 13
Changing over door hinges 13

Disposal notes

The appliance contains reusable materials and should be disposed of properly - not simply with unsorted household refuse. Appliances which are no longer needed must be disposed of in a professional and appropriate way, in accordance with the current local regulations and laws.

When disposing of the appliance, ensure that the refrigerant circuit is not damaged to prevent uncontrolled escape of the refrigerant it contains (data on type plate) and oil.

- Disable the appliance.
- Pull out the mains plug.
- Cut through the connection cable.

⚠ **WARNING**
Danger of suffocation due to packing material and plastic film! Do not allow children to play with packaging material. Take the packaging material to an official collection point.

Description of the appliance

GG 4010
GG 4060

GG 5210
GG 5260

Lock

Operating and control elements

Type plate

Grid shelves

Baskets

Adjustable feet

Adjustable feet

Safety lock

The lock is equipped with a safety mechanism.

Locking the appliance

- Insert the key as shown by arrow **1**.
- Turn the key 180°.

To unlock the appliance, the same procedure must be repeated in the same order.

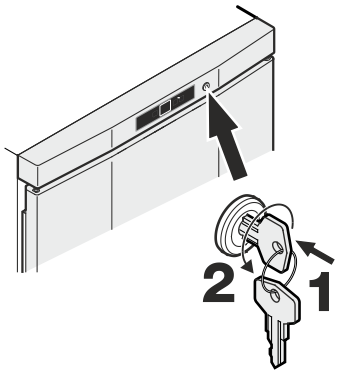

⚠ **Important**
The maximum load per grid shelf is

GG 40 45 kg.
GG 52 60 kg.

Safety instructions and warnings

identifies dangerous inflammable substances.

- To prevent injury or damage to the unit, the appliance should be unpacked and set up by two people.
- In the event that the appliance is damaged on delivery, contact the supplier immediately before connecting to the mains.
- To guarantee safe operation, ensure that the appliance is set up and connected as described in these operating instructions.

Incorrect handling of inflammable refrigerants

- Disconnect the appliance from the mains if any fault occurs. Pull out the plug, switch off or remove the fuse.
- When disconnecting the appliance, pull on the plug, not on the cable.
- Only carry out repair and other work on the appliance when the mains plug has visibly been disconnected.
- Any repairs and work on the appliance should only be carried out by the customer service department, as unauthorised work could prove highly dangerous for the user. The same applies to changing the mains power cable.
- Do not allow naked flames or ignition sources to enter the appliance. When transporting and cleaning the appliance ensure that the refrigerant circuit is not damaged. In the event of damage, make sure that there are no ignition sources nearby and keep the room well ventilated.
- Do not stand on the plinth, drawers or doors or use them to support anything else.
- Avoid prolonged skin contact with cold surfaces or chilled/frozen food. This could cause pain, numbness and frostbite. In the case of prolonged skin contact, protective measures should be taken, e.g. gloves should be worn.
- Do not eat ice cream, particulary ice lollies or ice cubes, immediately after taking them from the freezer compartment as there is a risk of "burning" because of the very cold temperatures.
- Do not consume food which has been stored for too long, as it could cause food poisoning.

Incorrect storage of inflammable substances

- Do not store explosives or sprays using combustible propellants such as butane, propane, pentane etc. in the appliance. Electrical components might cause leaking gas to ignite. You may identify such sprays by the printed contents or a flame symbol.
- Do not use electrical appliances inside the appliance.
- If you have a lockable appliance, do not keep the key near the appliance or within reach of children.
- The appliance is designed for use in enclosed areas. Do not operate the appliance outdoors or in areas where it is exposed to splash water or damp conditions.
- Do not seal ventilation openings on the appliance housing or enclosure.

Range of appliance use

The appliance is suited only for cooling food.

The appliance is not suited for storing and cooling pharmaceuticals, blood plasma, laboratory preparations or similar substances and products subject to the Medical Devices Directive 2007/47/EG.

Any misuse of the appliance may result in damage to or spoilage of the stored goods.

Furthermore, the appliance is unsuited for use in areas exposed to an explosion hazard.

Noise emissions from the appliance

The noise level while the appliance is operating is below 70 dB(A) (relative noise level 1 pW).

Climate rating

The climate rating indicates at what room temperature the appliance may be operated to achieve full cooling capacity and what the maximum humidity level in the area around the appliance may be to ensure that no condensation forms on the exterior housing.

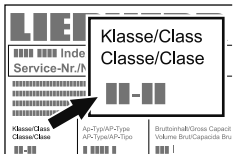

The climate rating is indicated on the type plate.

Climate rating	Max. room temperature	Max. relative humidity
3	25°C	60%
4	30°C	55%
5	40°C	40%
7	35°C	75%

The minimum room temperature at the place of installaton is 10°C.

Setting up

- Do not place the appliance in direct sunlight or near cookers, radiators and similar sources of heat.
- The floor on which the appliance stands should be horizontal and level. Compensate for uneven floors with the adjustable feet.

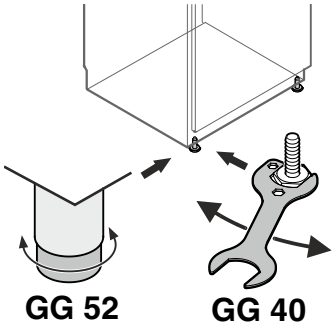

⚠ WARNING!

The height of the foot can be adjusted from 150 mm to 180 mm.

Do not set the adjustable foot to a height greater than 180 mm! The bottom section of the adjustable foot can become loose and the appliance may then tip over.

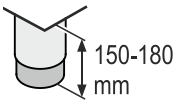

This can lead to serious or even fatal injuries.

- Do not cover ventilation openings or grille. →

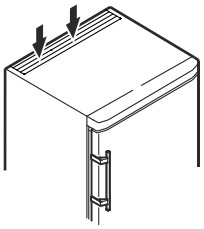

- Standard EN 378 specifies that the room in which you install your appliance must have a volume of 1 m^3 per 8 g of R 600a/R290 refrigerant used in the appliance, so as to avoid the formation of inflammable gas/air mixtures in the room where the appliance is located in the event of a leak in the refrigerant circuit. The quantity of refrigerant used in your appliance is indicated on the type plate on the inside of the appliance.
- Always install the appliance directly against the wall.
- If several appliances are installed next to each other, leave a gap of 30 mm between them.
  If this gap is too narrow, condensation forms between the side walls.

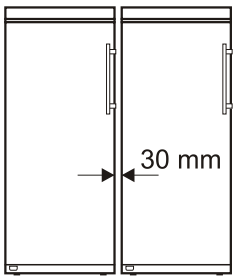

Appliance dimensions

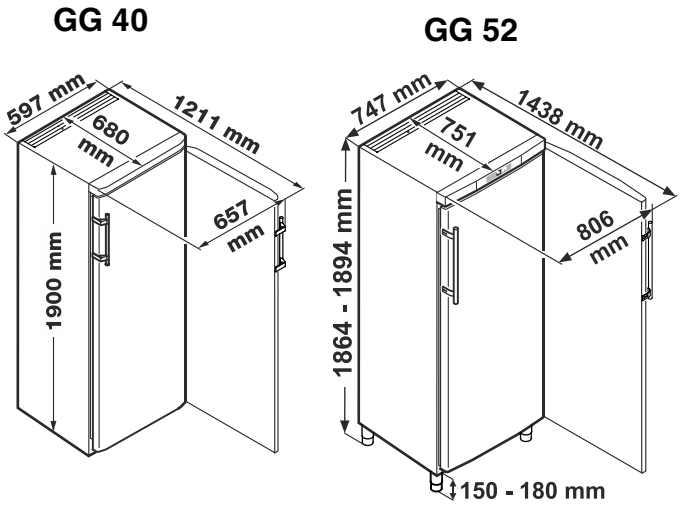

Electrical connection

Only operate the appliance with **alternating current (AC)**.

The permissible voltage and frequency are indicated on the type plate. The position of the type plate is shown in the section entitled **Description of the appliance**.

The socket must be properly earthed and protected by a fuse.

The tripping current of the fuse must be between 10 A and 16 A.

The socket must not be situated behind the appliance and must be easily accessible.

Do not connect the appliance using an extension cable or extension socket.

Do not use stand-alone inverters (conversion of direct current to alternating current/three-phase current) or energy-saving plugs. Risk of damage to the electronic control system!

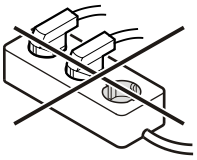

Operating and control elements

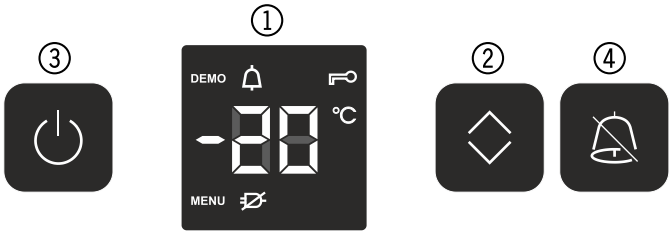

① Temperature display (display)
② Temperature button
③ On/Off button
④ Audible warning on/off button

Symbols in the display

MENU Setup mode is activated (activating the child lock and adjusting the display brightness)

Alarm (symbol flashes if the temperature inside the appliance is too high or too low)

Child lock is activated

Power failure symbol

DEMO Demo mode is activated

Switching the appliance on and off

Switching the appliance on

Press the **On/Off** button so that the temperature display lights up.

Switching the appliance off

Press the **On/Off** button for approx. three seconds so that the temperature display goes out. In addition, an audible warning signal will sound.

Setting the temperature

Press the **Up/Down** button. The temperature display flashes.

Press the **Up/Down** button, the next lower temperature value in the temperature display will light up.

Keep pressing the **Up/Down** button until the desired value is displayed.

After a certain period of operation, the interior temperature will adjust to the value which has been set.

The electronic controls will switch over automatically about 5 seconds after the last time you pressed the button, and the actual temperature will be displayed.

The temperature can be set at between -14°C and -28°C.

If **C6** or **F3** appears in the display, the appliance has suffered a fault. In this case, contact the customer service department.

Door open alarm

If the door is left open for more than 180 seconds, the audible warning signal will sound.

If the door must be opened for a lengthy period to place items into the appliance, cancel the audible warning signal by pressing the **Alarm** button.

The alarm switches back to standby when the door is shut.

Temperature alarm

If the temperatures in the interior are out of the permitted range, the audible warning signal will sound and the temperature display will flash.

The audible warning device is switched off by pressing the **Alarm** button.

The temperature display will continue to flash until the cause of the alarm has been rectified.

This can be caused by:

- the freezer door being left open for a long time, allowing warm ambient air to enter;
- a long power failure;
- a fault in the appliance.

In each case, make sure food has not thawed or perished.

Power failure display

If appears in the display, the freezer temperature has risen too high due to a power failure.

- Press the **Alarm** button.

The highest temperature during the power failure will be displayed.

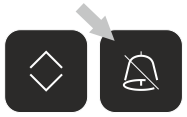

Check the quality of the food depending on the temperature displayed.

Do not eat perished food!

Do not refreeze thawed food!

Press the **Alarm** button again to cancel the display.

Setup mode

In setup mode, you can set the child lock and adjust the brightness of the display.

The child lock is designed to protect the appliance from being switched off and the temperature setting from being changed accidentally.

Activating the child lock

Press for 5 seconds. Display =

Display =

Display =

Display =

The child lock is activated.

Deactivating the child lock

Press for 5 seconds. Display =

Display =

Display =

Display =

The child lock is deactivated.

Adjusting the display brightness

Press for 5 seconds. Display =

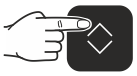 Display =

Display =

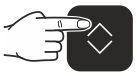 Adjust to the desired brightness using the **Up/Down** button.

h0 = minimum brightness
h5 = maximum brightness

Display =

The adjusted brightness will be activated after one minute.

Note
If a button is pressed, the display lights up for one minute at maximum brightness.

When commissioning the appliance, the adjusted brightness will only be active once the set interior temperature of the appliance has been reached.

Defrosting

After a longer period of operation a layer of frost or ice can build up on the cooling plates in the freezer compartment. This will increase the energy consumption of the freezer. The cooling plates should therefor be defrosted regularly.

- Switch the appliance off to defrost. Pull out the mains plug.
- Wrap the frozen food in paper or blankets and store in a cool place.
- Leave the door of the appliance open while defrosting. After defrosting mop up the remaining water and clean the appliance.

Do not use any mechanical devices or other artificial aids for defrosting other than those recommended by the manufacturer.

Cleaning

Clean the appliance at least twice per year.

Before cleaning always switch off the appliance. Pull out the mains plug or remove/unscrew the fuse.

- Clean the inside, equipment parts and outer walls with lukewarm water and a little detergent.

Do not use steam cleaners because of the risk of injury and damage.

- Ensure that no cleaning water penetrates into the electrical components or ventilation grille.
- Dry all parts well with a cloth.
- The dust should be removed from the refrigeration unit and heat exchanger - metal grid at the back of the appliance - once a year.
- Do not damage or remove the type plate on the inside of the appliance. It is very important for servicing purposes.
- Use a commercially available stainless-steel cleaning agent for **stainless-steel appliances**.

Do not use abrasive sponges or scourers, do not use concentrated cleaning agents and never use cleaning agents containing sand, chloride or acid or chemical solvents, as these would damage the surfaces and could cause corrosion.

Malfunctions

- **CC, C8, F1 or F2 appears in the display.**

– The appliance has suffered a fault. Contact the customer service department.

You may be able to rectify the following faults by checking the possible causes yourself:

- **Appliance does not function:**

– Is the appliance switched on?
– Is the plug correctly fitted in the mains socket?
– Is the fuse intact?

- **When inserting the mains plug, the refrigeration unit does not switch on, but a value is shown in the temperature display.**

– Demo mode is activated.
Contact the customer service department.

- **Loud running noise:**

– Is the appliance set up firmly on the floor?
– Does the appliance cause nearby items of furniture or objects to vibrate? Please note that noises caused by the refrigerant circuit cannot be avoided.

- **The temperature is not low enough:**

– Is the temperature setting correct (see "Setting the temperature")?
– Does the separately installed thermometer show the correct reading?
– Is the ventilation system working properly?
– Is the appliance set up too close to a heat source?

If none of the above causes apply and you cannot rectify the fault yourself, contact the nearest customer service department stating the type designation ①, service number ② and appliance number ③ as indicated on the type plate.

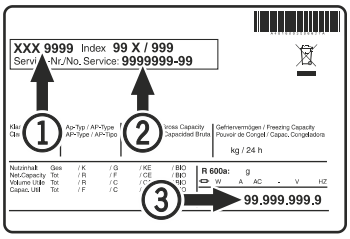

The position of the type plate is shown in the section entitled **Description of the appliance**.

Shutting your appliance down

If your appliance is to be shut down for any length of time, switch it off and disconnect the plug or switch off or unscrew the fuse. Clean the appliance and leave the door open in order to prevent unpleasant smells.

The appliance complies with the relevant safety regulations and EU Directives 2014/30/EU and 2006/42/EG.

Changing over door hinges

Door hinges should only be changed by a trained expert.

Changing the door hinges must be done by two people.

1. Remove screw from lower hinge bracket.

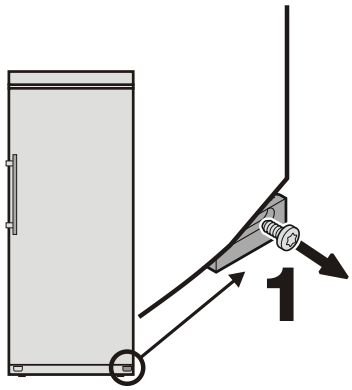

2. Lift door, tilt to the right and remove.

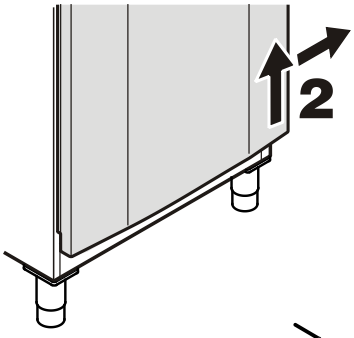

3. Transfer upper hinge components to the opposite side.

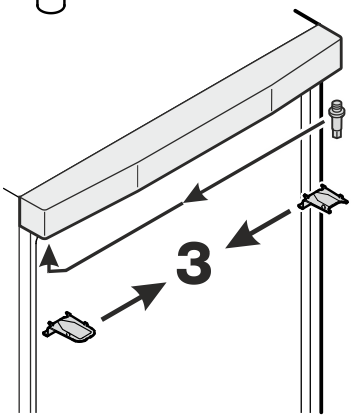

4. Transfer lower hinge bracket and cover plate to the opposite side.

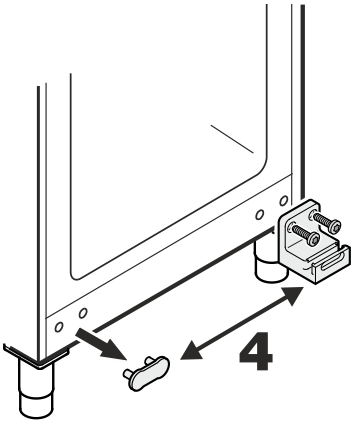

5. Turn lower hinge pin through 180° and remove.

6. Insert pin on the opposite side and turn through 180°.

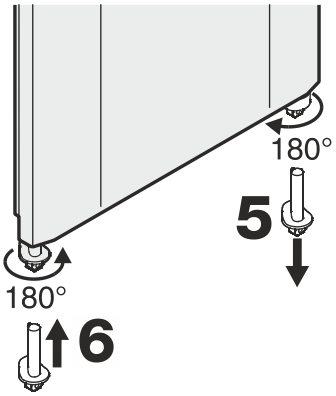

7. Locate door on upper pin.

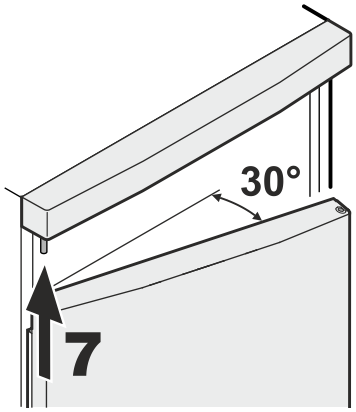

8. Tilt door inwards from the left.

9. Secure hinge pin with screw.

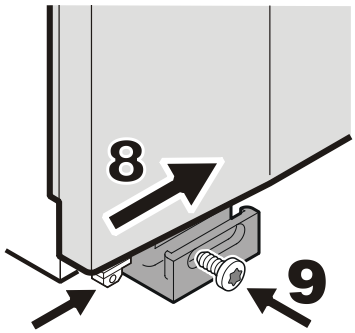
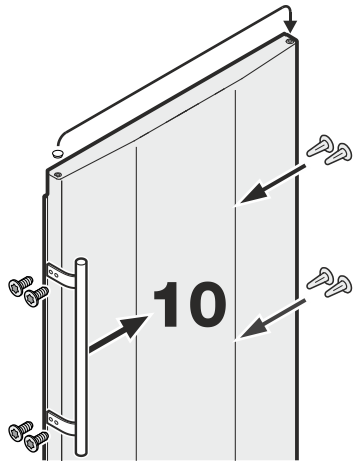
10. Transfer handle and plugs to the opposite side of the door.