KERN & Sohn GmbH
Ziegelei 1
D-72336 Balingen
E-mail: info@kern-sohn.com
Tel: +49-[0]7433- 9933-0
Fax: +49-[0]7433-9933-149
Internet: www.kern-sohn.com

User instructions
Stereo microscope set

KERN OZL-9

OZL 961, OZL 963

Version 1.1
12/2020

GB

KERN OZL-9

Version 1.1 12/2020

User instructions

Stereo microscope set

Table of contents

1 Before use 3
1.1 General notes 3
1.2 Notes on the electrical system 3
1.3 Storage 4
1.4 Maintenance and cleaning 5
2 Nomenclature 6
3 Basic data 8
4 Assembly 9
5 Operation and functionality 11
5.1 Getting started 11
5.2 Adjust the interpupillary distance 11
5.3 Adjusting the magnification 11
5.4 Dioptre adjustment and focussing 12
5.5 Adjusting the stand 13
5.6 Using eye cups / High Eye Point eyepieces 14
5.7 Brightness adjustment 15
5.8 Fitting and adjusting a camera 16
5.9 Using additional accessories 17
6 Optical data 18
7 Trouble shooting 18
8 Service 19
9 Disposal 19
10 Further information 19

1 Before use

1.1 General notes

You must open the packaging carefully, to make sure that none of the accessories in the packaging fall on the floor and get broken.

In general, microscopes should always be handled carefully because they are sensitive precision instruments. When using or transporting the microscope it is particularly important to avoid abrupt movements, as this may damage the optical components.

You should also avoid getting dirt or finger prints on the lens surface, because in most cases this will reduce image clarity.

To maintain the performance of the microscope, it must never be disassembled. So components such as lenses and other optical elements should be left as they were before use. Also the electrical parts of the device must not be tampered with, as in this area there is an additional risk of triggering an electric shock.

1.2 Notes on the electrical system

Before connecting to a mains power supply, you must make sure that you are using the correct input voltage. The information to select the correct mains cable is located on each device, on the rear of the product directly above the connection socket. You must comply with this information. If you do not comply with these specifications, then fires or other damage to the device could occur.

The main switch must also be switched off before the mains cable is connected. In this way you will avoid triggering an electric shock.

If you are using an extension cable, then the mains cable you use must be earthed.

When carrying out any procedures whereby you come into contact with the electrical system of the device, such as, for example, changing the bulb or fuse, only carry out these procedures when the power is disconnected.

1.3 Storage

You should ensure that the device is not exposed to direct sunlight, temperatures which are too high or too low, vibrations, dust or a high level of humidity.

The ideal temperature range is between 0 and 40°C and a relative humidity of 85% should not be exceeded.

The device should always be located on a rigid, smooth, horizontal surface.

For devices with pillar stands, the microscope holder must not be rotated back too far. If you do this, there is a risk that the microscope could tip over.

When the microscope is not being used, you should fit the objective cap and cover the microscope with the enclosed dust protective cover.
If the eyepieces are being stored separately, the protective caps must be fitted to the tube connectors. In most cases, if dust and dirt gets inside the optical unit of a microscope this can cause irreversible errors or damage.

The best way to store accessories which consist of optical elements, such as, for example, eyepieces and objectives, is in a dry box with desiccant.

1.4 Maintenance and cleaning

In any event, the device must be kept clean and dusted regularly.
If any moisture should be occur, before you wipe down the device you must ensure that the mains power is switched off (if lighting unit is fitted).

When glass components become dirty, the best way to clean them is to wipe them gently with a lint-free cloth.

To wipe oil stains or finger prints off the lens surface, moisten the lint free cloth with a mixture of ether and alcohol (70 / 30 ratio) and use this to clean the lens.

You must be careful when handling ether and alcohol, as these are highly flammable substances. You must therefore keep it away from naked flames and electrical devices which can be switched on and off, and only use it in well-ventilated rooms.

However organic solutions of this type should not be used to clean other components of the device. This could lead to damage to the paint finish. To do this, it is sufficient to use a neutral cleaning product.

You could also use the following cleaning products to clean the optical components:

- Special cleaner for optical lenses
- Special optical cleaning cloths
- Bellows
- Brush

When handled correctly and checked regularly, the microscope should give many years of efficient service.

Should repairs still be necessary, please contact your KERN dealer or our Technical Department.

2 Nomenclature

Using the OZL 963 as an example (Trinocular)

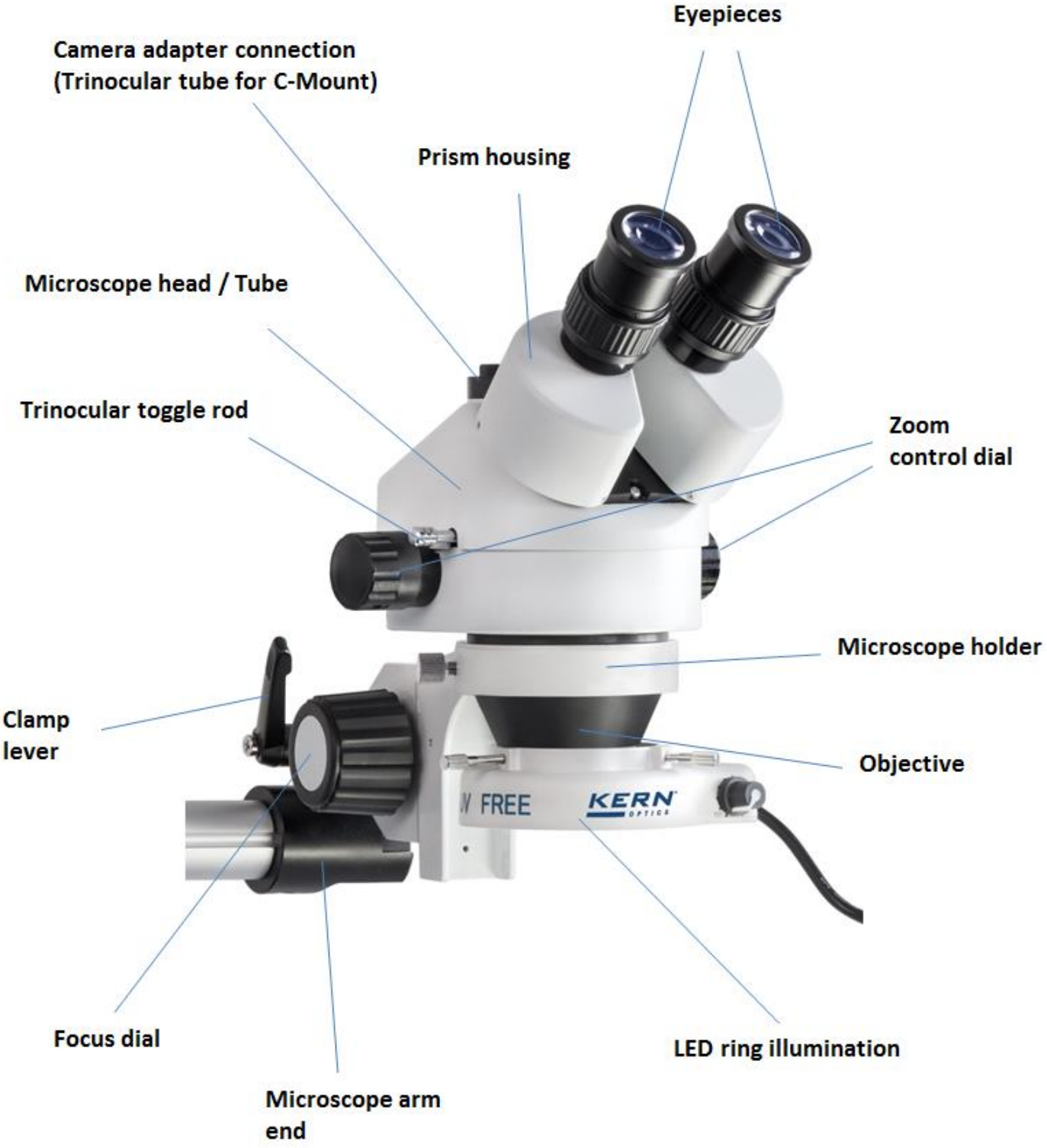

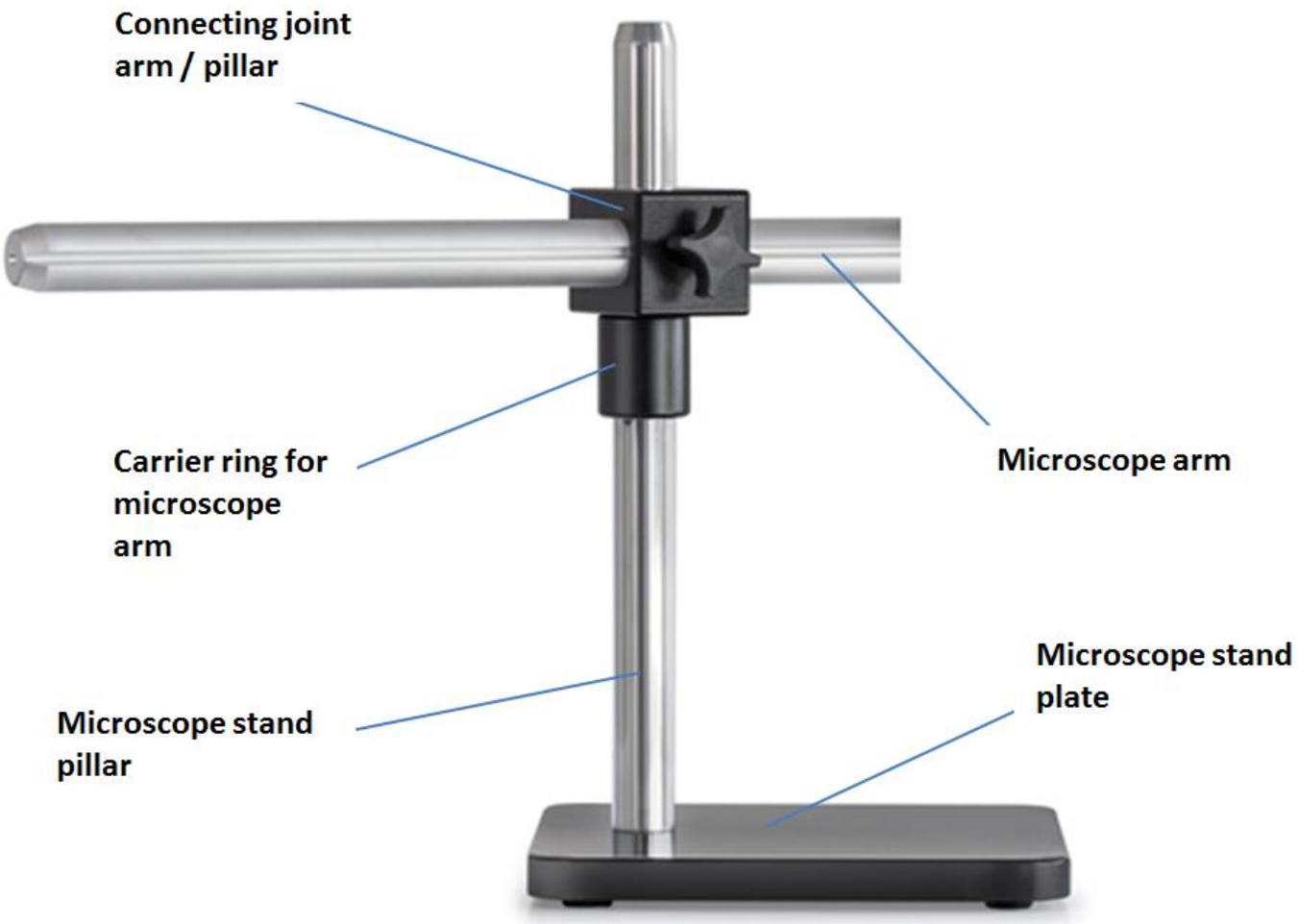
Connecting joint arm / pillar
Carrier ring for microscope arm
Microscope arm
Microscope stand plate
Microscope stand pillar

3 Basic data

Optical system	Greenough
Dimmable lighting	Yes
Magnification ratio	6,4:1
Tube	angled at 45°
Interpupillary distance	55 – 75 mm
Dioptre adjustment	On both sides
Eyepiece	HWF 10x / Ø 20mm
Field of view (mm)	Ø 28,6 – 4,4

Standard configuration

Model	Microscope head		Stand	Holder	Illumination
KERN	Tube	Objective Zoom			
OZL 961	Binocular (OZL 461)	0,7× – 4,5×	Telescopic arm with plate	With coarse focusing knob Adjustable torque of the hand wheels	4,5 W LED ring light (OBB-A6102)
OZL 963	Trinocular (OZL 462)	0,7× – 4,5×	Telescopic arm with plate	With coarse focusing knob Adjustable torque of the hand wheels	4,5 W LED ring light (OBB-A6102)

4 Assembly

The assembly of the microscope stand together with the holder has to be carried out as follows:

1. **Microscope stand base**
   a. Stand plate:
      Attach the stand pillar with help of the screw onto the stand plate.
      Afterwards place the plate on an even and stable table surface.

2. **Microscope arm**
   Attach the arm to the pillar with help of the joint, which is already fitted to the arm. Fasten the appropriate screws for arm, joint and carrier ring.

3. **Connecting joint arm – holder**
   On the appropriate microscope arm end there is the connection point for the microscope holder. This point is blocked. Thus the both Allen screws need to be loosened in order to attach the holder.
   Subsequently attach the microscope holder connecting piece, which is already mounted to the holder by a joint, to the connection point and retighten the both screws.

4. **Microscope holder**
   Fix the holder in a preferred position by using the clamp lever on the joint connection.

Please see section 5.5 for more details on adjusting the stand.

The next step is to place the **microscope head on the holder**, by passing the objective through the holder ring until the rest of the head is above the ring.

You must use the small silver adjusting screw on the front of the holder ring to **fix the head** in place.
The alignment of the microscope head is left to the user to do and can be adjusted to suit the individual application situations.

Then you can remove the protective caps from the tube connectors so that you can then **fit the eyepieces**. When doing this, please be particularly careful that you do **not touch the optical lenses with your fingers** and that no dust enters the apertures.
You should also **never fit two eyepieces with different magnifications**.

In order to ensure the **incident illumination**, the LED ring light needs to be attached to the bottom of the objective housing of the microscope head. The three fastening screws on the holder of the ring light are used for the mounting.
Therefor it is important to pay attention to the groove around the objective housing, which is intended to be the socket for the screws.

Additional optional attachments:

- The eye cups supplied with the microscopes can be fitted to the eyepieces. *(see section 5.6).*

- You can fit a C-mount adapter to the appropriate connection point on the top of the microscope head for trinocular devices (OZL 963). This enables you to fit and use digital cameras (remove protective cap first) *(see section 5.8)*.

5 Operation and functionality

5.1 Getting started

After assembly, if the microscope is ready for use, then for devices with lighting you must first establish a **power connection** using the cable supplied.
Please see section 5.7 for more details on adjusting the lighting.

If the device has a camera connection (OZL 963), then for **binocular** use, you must let the **trinocular toggle rod** on the side of the microscope head stay **slid-in**.
For trinocular use (camera connection) see section 5.8.

Do not forget to remove the cap from the bottom of the objective, so that you will then be able to see a reflection of the object being observed in the eyepiece.

All important functions which relate to the use of the devices in this document are described in the following sections.

5.2 Adjust the interpupillary distance

Different users have different interpupillary distances. So each time a different person uses the microscope, the gap between the two eyepieces must be re-adjusted.
While you are looking through the eyepieces, use one hand to hold the righthand or lefthand prism housing firmly.
By rotating outwards or inwards, you can either increase or reduce the interpupillary distance.
As soon as the lefthand and righthand visual fields exactly overlap each other, this is the correct interpupillary distance.

5.3 Adjusting the magnification

As the KERN OZL-9 series are stereo zoom microscopes, then you adjust the magnification using the two zoom adjustment wheels on the lefthand and righthand side of the microscope head.

Chapter 6 “Optical data” gives information on the possible overall magnification which the microscope can produce. It will also include the optional use of different eyepieces and auxiliary objectives.

5.4 Dioptre adjustment and focussing

A special feature of stereo microscopes is that they are fitted with an optical unit which has a relatively high depth of field. In order to be able get the most benefit from this feature, each user must synchronise the focussing mechanisms for themselves.

The steps to do this are described in the following section.

1. Place the object to be observed on the working surface under the objective.

2. Put both dioptre adjustment rings into the starting position of 0.

3. Use the zoom control dials to set the smallest possible magnification.

4. Look through the right eyepiece with the right eye and bring the object into focus by using the focus control dials.

5. Now set the largest possible zoom factor.

6. Once again, still only looking through the right eyepiece, bring the object into focus

7. Then set the smallest possible zoom factor again.

8. If the object then does not appear to be in focus, adjust the focus on the dioptre adjustment ring of the right eyepiece.

9. In order to get the highest level of accuracy when adjusting the focus, you should repeat steps 5-8.

10. Afterwards set back to the smallest possible zoom factor.

11. Then look through the left eyepiece with the left eye and use the lefthand dioptre adjustment ring to also adjust the optimum focus of the object.

12. In this way, the object being observed will be in focus at any zoom setting.

5.5 Adjusting the stand

Torque of the focus wheels

You adjust the torque of the focus wheels by holding one of the two wheels in place and using the other hand to turn the other wheel.
Depending on the direction of the turn, the torque will be increased or decreased.
On one hand, this function can help to make it easier to adjust the focus and on the other hand it can prevent the microscope head from slipping down unintentionally. In this way you can avoid possible damage which could occur if the objective lens and the object being observed should collide.

Adjustment of height and arm distance

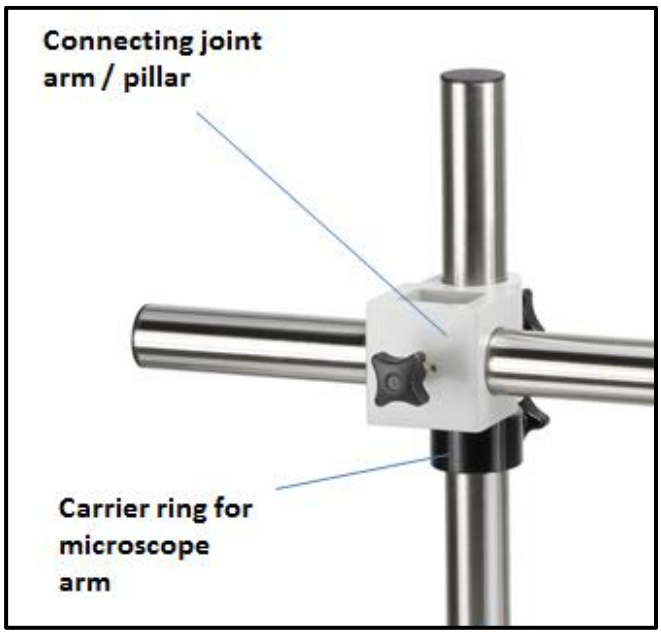

Fixing the microscope holder

In order to set the required height of the microscope head, at first the carrier ring for the microscope arm needs to be located at the appropriate position on the stand pillar. Afterwards you put the connecting joint between arm and pillar onto the carrier ring, so that the ring holds the joint.
The arm is now rotatable around the pillar and fixable in the preferred position.
Furthermore the arm can be moved back and forth, so that the optimum distance between stand pillar and microscope head can be set.

In order to effect an inclined position of the microscope head, you need to vary the alignment of the joint between microscope arm end and microscope holder connecting piece and fasten it with help of the clamp lever.

5.6 Using eye cups / High Eye Point eyepieces

The eye cups supplied with the microscope can basically be used at all times, as they screen out intrusive light, which is reflected from light sources from the environment onto the eyepiece, and the result is better image quality.

But primarily, if eyepieces with a high eye point (particularly suitable for those who wear glasses) are used, then it may also be useful for users who don't wear glasses, to fit the eye cups to the eyepieces.

These special eyepieces are also called High Eye Point eyepieces. They can be identified by the glasses symbol on the side. They are also marked in the item description by an additional "H" (example: HSWF 10x Ø 23 mm).

When fitting the eye cups, make sure that the dioptre setting is not moved. We would therefore advise that you hold the dioptre adjustment ring on an eyepiece with one hand while you fit the eye cup with the other.

Before using the microscope, users who wear glasses must remove the eye cups, which you may find on High Eye Point eyepieces.

As the eye cups are made of rubber, you must be aware that when you are using them, they can become slightly dirty through grease residues. In order to maintain hygiene, we would therefore recommend that you clean the eye cups regularly (e.g. with a damp cloth).

Eye cups

High Eye Point eyepiece
(identified by the glasses symbol)

5.7 **Brightness adjustment**

There is only the usage of incident illumination available when working with KERN stereo microscope sets. Therefor a LED ring light (*see picture below*) is required, that can be mounted to the bottom of the microscope head (*see chapter 4 Assembly*).

Provided that the power connection is established, the illumination can be switched on by using the main switch, which is located at the housing rear of the illumination unit.

Furthermore it is possible to adjust the light intensity. Therefor you have to use the control knob on the side of the housing. Depending on which way you turn the knob, the light will become lighter or darker.

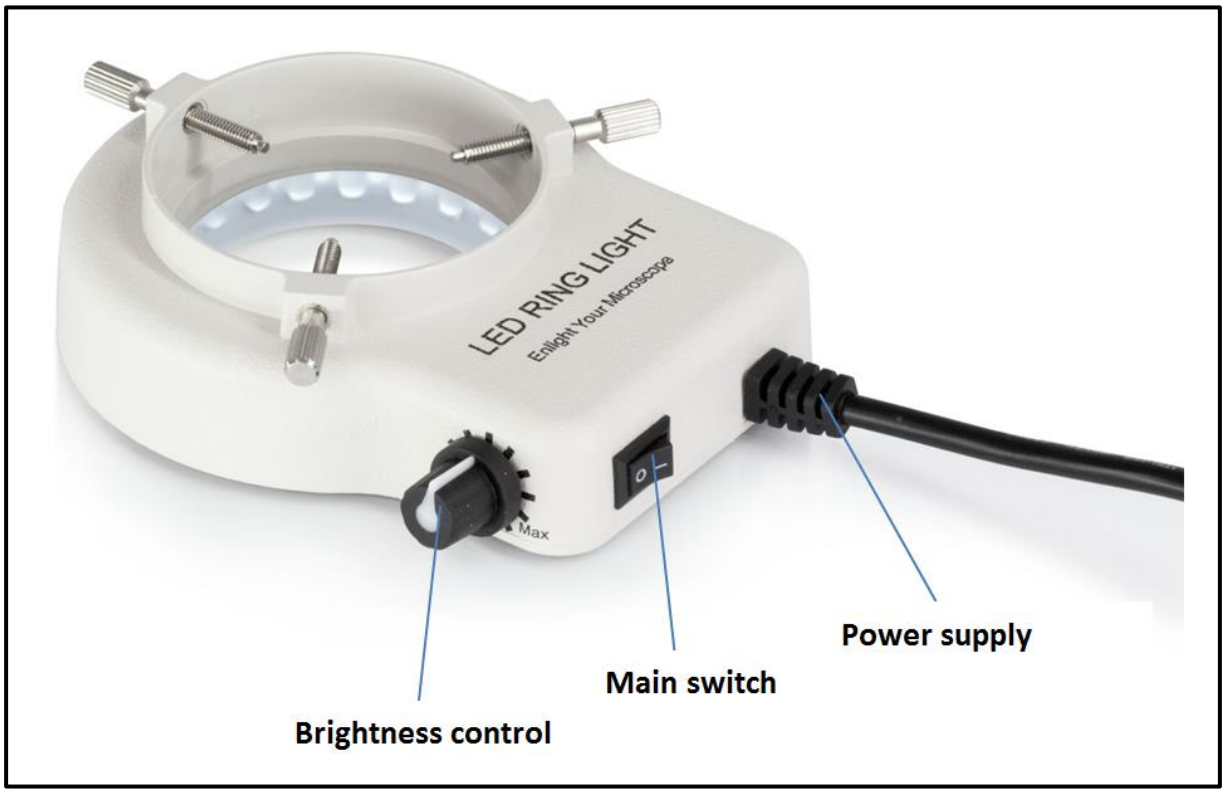

Control elements for the lighting unit

5.8 Fitting and adjusting a camera (OZL 963)

You can connect special microscope cameras to trinocular devices in the OZL-46 series, so that you can digitally record images or sequences of objects being observed.

The connection for this is on the top side of the microscope head.
When the **trinocular toggle rod is pulled out**, the beam path, which normally emits on the righthand eyepiece, is diverted in the tube, so that it can be used for the camera adapter connection.
This means that when the device is used in trinocular mode, you will see one image in the left eyepiece and one on the monitor of the microscope camera.
This means that the 3D effect is lost.

To fit a <u>microscope camera</u> properly, you must use an adapter with a C-mount thread, which needs to be attached to the camera connection point.

In total there are three focusable adapters to choose from *(see figure below)*. The difference between these adapters is that they have different integrated magnification (0.3x, 0.5x, 1.0x).
The camera and adapter are then united using the C-mount thread.

C-mount adapter

The image which is shown on the camera connected to the device can often have a different level of focus compared with the image on the eyepiece. In order to be able to bring both images into focus, **the focus can be adjusted by those adapters when turning the attached black plastic ring.**

5.9 Using additional accessories

Auxiliary objectives

In order to make the magnification series of one of the stereo zoom microscopes described here even more flexible, there is the option of using appropriate auxiliary objectives.
You can choose from four different achromatic corrected objectives (0.5x, 0.75x, 1.5x, 2.0x), depending on what is required.

You can fit these objectives by simply screwing them onto the thread of the objective housing which is located at the bottom of the microscope head.
When you are doing this, you must avoid touching the objective lenses with your fingers or leaving any dust between the standard objective and the auxiliary objective.

6 Optical data

Eyepiece	Specifications – Objectives					
	Magnification	Standard	Auxiliary objectives			
		1,0×	0,5×	0,75×	1,5×	2,0×
HSWF 10×	Total magnification	7× – 45×	3,5× – 22,5×	5,3× – 33,8×	10,5× – 67,5×	14× – 90×
	Field of view mm	⌀ 28,6 – 4,4	⌀ 57,1 – 8,9	⌀ 38,1 – 5,9	⌀ 19 – 3	⌀ 14,3 – 2,2
HWF 15×	Total magnification	10,5× – 67,5×	5,3× – 33,8×	7,9× – 50,6×	15,5× – 101,3×	21× – 135×
	Field of view mm	⌀ 21,4 – 3,3	⌀ 42,9 – 6,7	⌀ 28,5 – 4,4	⌀ 14,3 – 2,2	⌀ 10,7 – 1,7
HSWF 20×	Total magnification	14× – 90×	7× – 45×	10,5× – 67,5×	21× – 135×	28× – 180×
	Field of view mm	⌀ 14,3 – 2,2	⌀ 28,6 – 4,4	⌀ 19,1 – 2,9	⌀ 9,5 – 1,5	⌀ 7,1 – 1,1
HWF 25×	Total magnification	17,5× – 122,5×	8,8× – 56,3×	13,1× – 91,9×	26,3× – 168,8×	35× – 225×
	Field of view mm	⌀ 12,9 – 2,0	⌀ 25,7 – 4,0	⌀ 17,2 – 2,7	⌀ 8,6 – 1,3	⌀ 6,4 – 1,0
Working distance		105 mm	177 mm	120 mm	47 mm	26 mm
Maximum sample height		140 mm	35 mm	80 mm	165 mm	185 mm

7 Trouble shooting

Problem	Possible causes
You can see two images	The interpupillary distance is not set correctly
	The magnifications of the eyepieces do not match
There is dirt in the visual field	There is dirt on the object being observed
	There is dirt on the eyepiece surface
The image is unclear	There is dirt on the objective surface
The focus wheels are jammed	The torque of the focus wheels is set too high
The microscope head slips down while you are viewing the object	The torque of the focus wheels is set too low
Eyes get tired easily	The dioptre adjustment is not correct
	The brightness adjustment is not correct

8 Service

If, after studying the user manual, you still have questions about commissioning or using the microscope, or if unforeseen problems should arise, please get in touch with your dealer. The device may only be opened by trained service engineers who have been authorised by KERN.

9 Disposal

The packaging is made of environmentally-friendly materials, which you can dispose of at your local recycling centre. Disposal of the storage box and device must be carried out by the operator in accordance with all national or regional laws in force in the location of use.

10 Further information

The illustrations may differ slightly from the product.

The descriptions and illustrations in this user manual are subject to change without notice. Further developments on the device may lead to these changes.

All language versions contain a non-binding translation.
The original German document is the binding version.

Notes