Operating Instructions
Read and observe these Operating Instructions!

Rotary Evaporator with Wireless Remote Control

RC 900

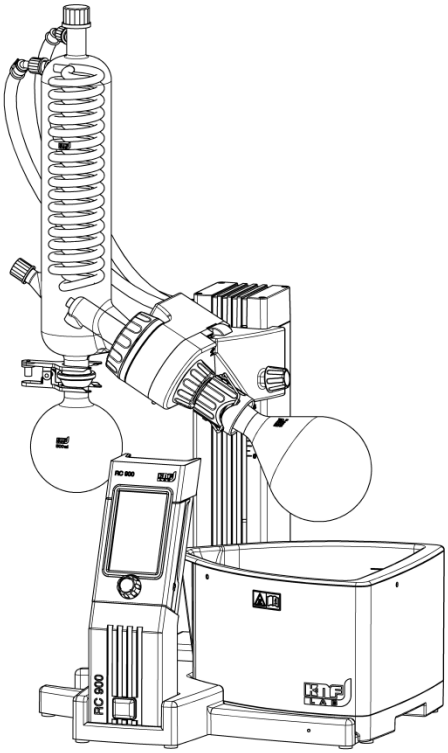

KNF Neuberger AG
Stockenstrasse 6
CH-8362 Balterswil
Tel. 0041 (0)71 973 993 0
Fax 0041 (0)71 973 993 1
E-mail: knf@knf.ch
www.knf.ch

KNF 126291-126293 11/14
Translation of original Operating Instructions, English

Included with the RC 900:

- Rotary evaporator and hand terminal (batteries included)
- Glass set, comprised of:
  - Vapor tube
  - Chilled condenser
  - Coated collection flask, 500 ml
  - Bracket for collection flask
  - Evaporation flask, 1000 ml
- Heating bath
- Set of hose fittings
  - 1x Hose fitting ID10 (vacuum)
  - 2x Hose fittings ID8 (coolant)
  - 2x Hose clamps ID8
- Protective cover (optional)
- Refilling valve (optional)
- Coolant valve (optional)
- Protective film for display (optional)
- Mains cable
- Power supply for hand terminal
- Operating Instructions
- Abbreviated instructions
- Table of solvents
- CD with digital Operating Instructions

Transportation protection

The rotary evaporator's hand terminal is secured at the factory in order to avoid damage during transportation.

The transportation protection must be removed before the hand terminal can be taken out. Refer to Chapter 6 *Setup and connection*

Contents Page

1. About this document 4
1.1. Using the Operating Instructions 4
1.2. Symbols and markings 4
2. Use 5
2.1. Intended use 5
2.2. Improper use 6
3. Safety 7
4. Technical data 9
4.1. Rotary evaporator 9
4.2. Rotary evaporator's hand terminal11
5. Components and functions 12
5.1. Components of the rotary evaporator 12
5.2. Rotary evaporator functions 13
5.3. Hand terminal 14
6. Installation and connection 16
6.1. Installation 16
6.2. Connections 26
7. Operation 27
7.1. Initial start-up 27
7.2. Stopping operation 31
8. Operating the rotary evaporator 33
8.1. Hand terminal 33
8.1.1. General functions and displays 33
8.1.2. Operation 36
8.2. Operation without hand terminal 41
8.3. Changing the evaporation flask 41
9. Servicing 42
9.1. Servicing schedule 42
9.2. Cleaning 42
9.2.1. Cleaning the rotary evaporator 42
9.2.2. Cleaning glass parts 42
9.2.3. Clean seal 43
9.2.4. Clean heating bath 43
9.2.5. Cleaning protective cover (accessory) 43
9.3. Changing vapor tube 44
9.4. Changing seal 45
9.5. Changing fuses 46
9.6. Inspecting protective conductor 47
9.7. Changing batteries on the hand terminal 47
10. Troubleshooting 48
11. Spare parts and accessories 53
11.1. Spare parts 53
11.2. Accessories (also see chapter 6)53
11.3. Glass product 54
12. Returns 55
13. Health and safety clearance and decontamination form 56

1. About this document

1.1. Using the Operating Instructions

The Operating Instructions are an integral part of the rotary evaporator.

➔ Carefully read the Operating Instructions before bringing the rotary evaporator into operation.

➔ Keep the Operating Instructions readily accessible at all times.

➔ Pass on the Operating Instructions to the next owner.

Custom systems

Rotary evaporators produced for specific customers (model designations prefixed with "PJ" or "PM") may exhibit differences from the Operating Instructions.

➔ Whenever using custom rotary evaporators, also observe the agreed specifications.

ℹ Compliance with the Operating Instructions is essential for safe and reliable operation of the rotary evaporator. Failure to observe the Operating Instructions may result in damage or injury.

1.2. Symbols and markings

Warning

WARNING

This symbol indicates a potential danger.

It also indicates the possible consequences of failure to observe the warning. The signal word (e.g. "Warning") indicates the level of danger.

➔ Here you will see actions for avoiding the danger and potential consequences.

Danger levels

Signal word	Meaning	Consequences if not observed
DANGER	warns of immediate danger	Consequences include death or serious injuries and/or serious property damage.
WARNING	warns of potential danger	Death or serious injuries and/or serious damage to property are possible.
CAUTION	warns of a potentially dangerous situation	Minor injuries or damage to property are possible.

Tab. 1

Other information and symbols

➔ This indicates an activity (step) that must be carried out.

1. This indicates the first step of an activity to be carried out. Any additional steps required are numbered consecutively.

ℹ This symbol indicates important information.

2. Use

2.1. Intended use

The RC 900 rotary evaporator is designed for use in chemical, pharmaceutical, and biological laboratories. It is intended exclusively for use in separation of solvents (distillation, drying, recovery, extraction, etc.).

Make sure that the installation location is dry and the rotary evaporator is protected against water in the form of rain, spray, splashes and drips.

The rotary evaporator may be used exclusively in indoor areas.

The rotary evaporator may be used only underneath a fume hood or properly installed protective cover (accessory).

Owner's responsibility

Operating parameters and conditions

Install and operate the rotary evaporator only under the operating parameters and conditions described in Chapter 4, Technical data.

Protect the rotary evaporator from moisture.

Use under a fume hood

Ensure that no hazardous materials can enter the surrounding environment (including heating and cooling media), even in the event of glass breakage, leaks, or loss of cooling.

Ensure that no hazardous materials/reactions can be produced through contact of processed solutions and solvents with the heating and cooling media or the ambient air. It may be necessary to operate the unit only under a suitable fume hood.

Whenever the rotary evaporator is operated outside of a suitable fume hood (after eliminating these sources of danger), the protective cover must be used (refer to Chapter 11, Spare parts and accessories, pg. 53).

Requirements for processed substances

Before using a substance, investigate its compatibility with the materials used in the seals and tubing.

Before using a substance, investigate whether it can be evaporated without danger.

Chilled condenser

Make sure the tubes for gas and cooling medium are correctly assigned on the chilled condenser.

Adequately cool the chilled condenser at all times.

Accessories

Laboratory equipment and supplemental components attached to the rotary evaporator must meet the specifications provided in Chapter 4.

KNF recommends collection and evaporation flasks from Duran.

2.2. Improper use

The rotary evaporator may not be used in potentially explosive atmospheres.

The rotary evaporator may not be used in a corrosive environment.

The heating bath of the rotary evaporator may not be used to warm food. It serves exclusively to add heat to the evaporation flask.

Never apply positive pressure to the rotary evaporator's vacuum connection.

The lifting drive may not be blocked or subjected to loads.

3. Safety

The rotary evaporator is constructed according to generally recognised rules of technology and in accordance with pertinent occupational safety and accident prevention regulations. Nevertheless, potential dangers during use can result in injuries to the user or others, or in damage to the rotary evaporator or other property.

Use the rotary evaporator only in a technically flawless condition, in accordance with its intended use, with awareness of safety and potential hazards, and in observance of the Operating Instructions.

Personnel

Ensure that only trained and instructed personnel or specially trained laboratory personnel work on the rotary evaporator. This applies also to assembly, connection and servicing work.

Make sure that the personnel has read and understood the Operating Instructions, and in particular the "Safety" chapter.

Working in a safety-conscious manner

Ensure adherence to all pertinent accident prevention and safety regulations when working on and operating the rotary evaporator. The protective clothing required for safety in the laboratory must be worn, i.e. protective glasses, gloves, etc.

Using the right hand terminal for the rotary evaporator

Ensure that personnel check before each use of the rotary evaporator that they have the hand terminal associated with the rotary evaporator. The rotary evaporator is equipped with a paging function for this purpose (see *Paging* , page 40).

Handling dangerous media

Safety regulations for handling initial substances and those that are produced in the process must be observed. This applies equally to the heating and cooling media.

Handling flammable media

Be aware that the rotary evaporator is not designed to be explosion-proof.

Ensure that the distillation residue is not explosive.

Make sure that the temperature of the medium is always sufficiently below its ignition temperature in order to avoid ignition or explosion. This also applies to unusual operating situations.

Consider any external sources of energy, such as sources of radiation, that could additionally heat the medium.

In case of doubt, consult KNF customer service.

Proper handling of the initial and resulting substances / heating and cooling media must be ensured.

Manufacturer regulations must be observed when disposing of the heating and cooling media. Be aware that the heating and cooling media may become contaminated.

Ventilating the rotary evaporator

When ventilating the rotary evaporator with air or inert gas, be sure to prevent formation of reactive or explosive media. The maximum permissible operating pressure of the chilled condenser is 0.1 bar rel.

Vaporisation delay

Ensure that the evaporation flask rotates throughout the entire heating phase (even during submersion/lifting) in order to avoid heating only one side of the evaporation flask or experiencing a vaporisation delay.

Ensure that the evaporation flask is immersed or lifted only at a low speed. Increase speed only to the extent that no heating medium is ejected from the heating bath.

Environmental protection

All replacement parts should be properly stored and disposed of in accordance with the applicable environmental protection regulations. Ensure adherence to the pertinent national and international regulations. This especially applies to parts contaminated with toxic substances.

Standards

The rotary evaporator complies with the safety stipulations of Directive 2004/108/EC for electromagnetic compatibility, Directive 2006/42/EC for machines, Directive 2011/65/EU (RoHS2) and Directive 1999/5/EC (R&TTE). The following harmonised standards are fulfilled:

- DIN EN 61010-1
- DIN EN 61010-2-010
- DIN EN 61326-1

The rotary evaporator complies with the following according to IEC 664:

- overvoltage category II
- contamination level 2

Customer service and repairs

All repairs to the rotary evaporator must be carried out by the responsible KNF Customer Service team.

Housing parts with voltage-caring parts may be opened by trained personnel only.

Only use genuine parts from KNF for servicing work.

4. Technical data

4.1. Rotary evaporator

Materials for parts contacting the medium	
Glass parts	Borosilicate glass
Vapor tube seal	PTFE compound
Refilling valve's fitting*	PP
Fitting seal	Silicone
Plug seals	PTFE-coated
Coolant line materials	
Fittings on condenser	PP
Fitting seal	Silicone
Connections on tower	Nickel-plated brass/galvanized
Internal connection	Norprene®, PA, stainless steel
Tubing	Norprene®
Vacuum line materials	
Fitting on condenser	PP
Connections on tower	PVDF, stainless steel
Inner connections	PTFE, PVDF, stainless steel
Tubing	Norprene®
Pneumatic data	
Max. permissible operating pressure [bar rel]	0.1
Electrical Data	
Nominal voltage [V]	See type label (+/- 10 %)
Frequency [Hz]	50-60
Heating power [W]	1300
Total power [W]	max. 1500
Total operating current [A]	See type label
Fuse [A]	2 x 8A delayed at 220-240V 2 x 16A delayed at 100-127V
Protection class	IP20
Heating bath	
Empty weight [kg]	1.85
Volume [ml]	5000
Fill quantity [ml]	4000
Heating temperature [°C]	20 - 180
Pull-out length [mm]	70
Coolant supply (chilled condenser)	
Permissible pressure [bar rel]	3
Permissible temperature	-15 °C to + 20 °C
Cooled surface [cm^2]	1230

Tab. 2 (1st part) ** Accessories*

Evaporation flask parameters	
Evaporation flask size	50 - 3000 ml
Speed [1/min]	25 - 250
Directional change interval [s]	5 - 120
Vertical travel [mm]	150
Lifting speed [mm/s]	approx. 38
Angle of inclination [°]	12 - 45
General	
Total weight [kg]	9.1
Dimensions W x D x H [mm]: - without glass set (footprint) - with glass set (approx.)	 431 x 447 x 464 487 x 447 x 823
Vacuum, coolant, and refilling connections	GL14
Maximum permissible ambient relative humidity	80 % for temperatures up to 31 °C, decreasing linearly to 50 % at 40 °C
Maximum altitude of installa-tion [m above sea level]	2000
Safety functions	
Drive motor fuses	Electronic overcurrent protection
Protection against overheating of heating bath	Thermal protective switch (man-ual reset) electronic temperature limitation electronic switch off at an insuf-ficient water quantity
Protection during power failure	Evaporation flask automatically lifted from the heating bath
Protection against glass breakage	digitally-adjustable stop
Monitoring of protective cover (accessory)	Hall effect sensor

Tab. 2 (2nd part)

4.2. Rotary evaporator's hand terminal

Dimensions: W x H x D [mm]	91 x 190 x 65
Weight [kg]	0.5
Operating voltage [V DC]	12
Operating current [A]	1.25
Wireless connection's frequency band [GHz]	2.4
Wireless range	Approx. 50 m without obstacles Approx. 10 m through walls
Power supply during wireless operation	Through integrated batteries or included power supply
DC charging socket	 External diameter: 6.3 mm Inside diameter: 2 mm
Batteries	4 x AA 1.2 V 2300 mAh; quick-charge capable; see spare parts list in Chapter 11
Battery internal resistance* (charged) [mΩ]	60
Battery service life*	Up to 12 hours, depending on number of entries and data transmission
Charging time*	About 7 h

Tab. 3 ** Applies to standard included batteries*

Use only the original power supply from KNF to operate or charge the hand terminal when removed from the evaporator.

Several rotary evaporators can be operated simultaneously using the associated hand terminals within the range of the wireless connection.

The wireless connection between the hand terminal and the rotary evaporator is robustly compatible with mobile telephones and Bluetooth devices in the immediate area.

5. Components and functions

5.1. Components of the rotary evaporator

1 Terminal
2 Hand terminal (removable; signals transmitted wirelessly)
3 Collection flask (coated)
4 Hand terminal holder for use in transportation
5 Flask clamp for **3**
6 Refilling connection
7 Chilled condenser
8 Tension nut for chilled condenser
9 Flask mechanism
10 Tension nut for vapor tube
11 Flask nut
12 Rotary knob for pivot angle
13 Evaporation flask
14 Tower
15 Heating bath
16 Bottom cover plate
17 Power switch

18 Vacuum line
19 Coolant line
20 Rotary knob for pivot angle
21 USB connection
22 Connection for coolant valve (accessory)
23 Coolant outlet
24 Coolant inlet
25 Vacuum connection
26 Fuses
27 Mains plug connection

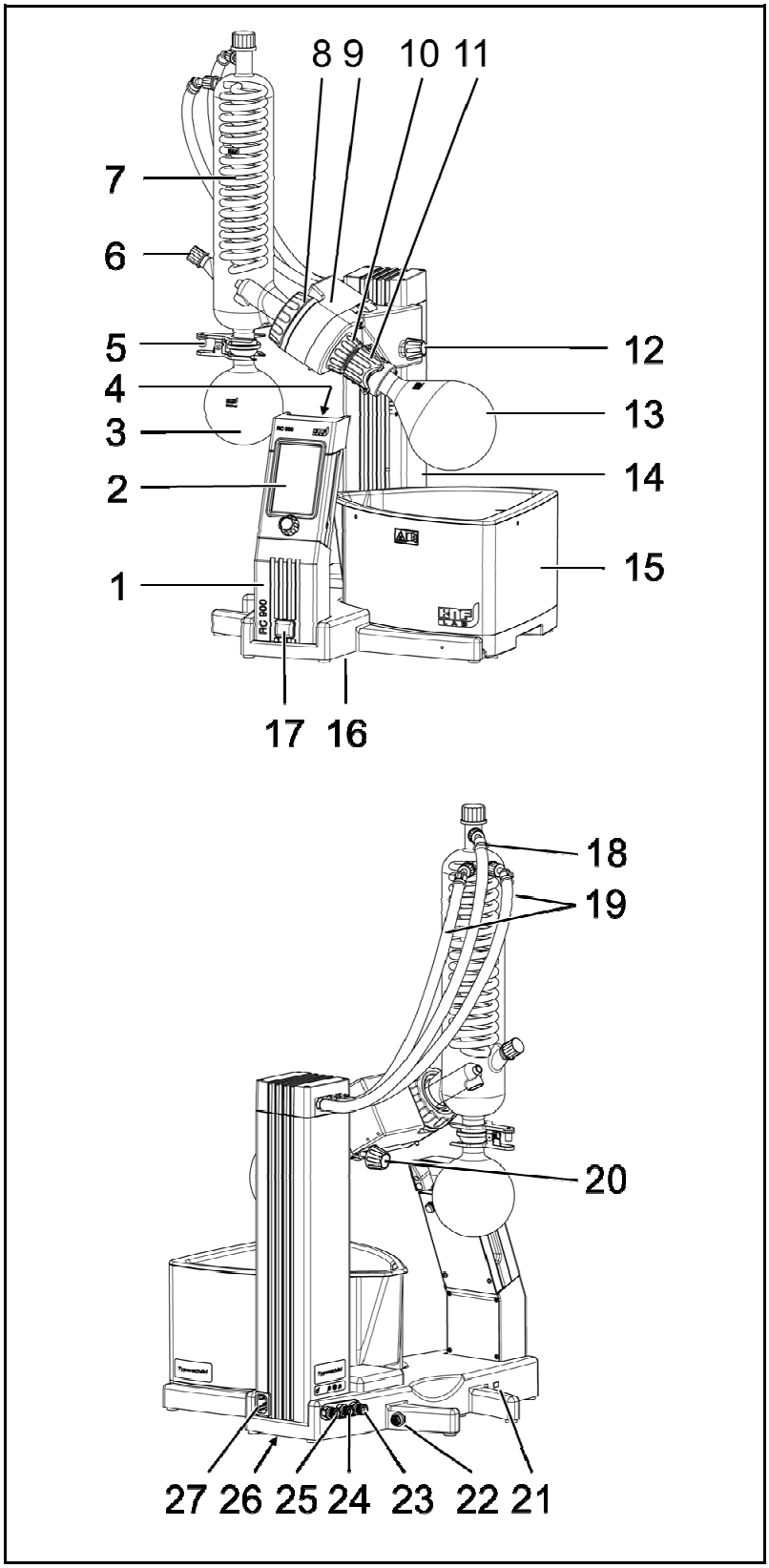

Fig. 1: RC 900 rotary evaporator

The RC 900 rotary evaporator is designed for distillation and evaporation of solvents. The rotary evaporator is operated via the hand terminal (Fig. 1/**2**, page 12).

The solvent that shall be evaporated is located in the evaporation flask (**13**). The solvent is made to evaporate through the proper combination of temperature and vacuum. The evaporation flask is immersed into the heating bath (**15**), in which a heating liquid is located, typically water or a suitable oil. The drive (**9**), continually rotates the evaporation flask inside the heating bath. Once the solvent begins to evaporate, it rises through the vapor tube and into the chilled condenser (**7**), which is continually cooled with cooling water or another cooling medium. Here the vapor is cooled to the point where it condenses and collects (again in liquid form) in the collection flask (**3**).

The chilled condenser and collection flask have a transparent coating that protects them against implosion.

A protective cover (accessory) is placed onto the heating bath to protect the evaporation flask from implosion and to protect against sprays.

5.2. Rotary evaporator functions

- **Evaporation flask**
  The evaporation flask's angle of inclination is adjusted via the rotary knobs (Fig. 1/**12+20**). Together with the ability to move the evaporation flask up and down and to displace the heating bath, the rotary evaporator may be adapted to various shapes and sizes of evaporation flasks.
  The drive (**9**) brings the evaporation flask into rotation, thereby achieving a high rate of evaporation:

- A more homogeneous distribution of temperature is achieved both in the heating bath and in the evaporation flask (optimisation of temperature control and heat transfer).
- The moistened surface inside the evaporation flask is enlarged (increases heat transfer and the boiling surface).
- Formation of a concentration gradient in the solvent is avoided.

Additional advantages of rotation include:

- The danger of evaporation delay is reduced
- No localized overheating, no crust formation

The hand terminal (**2**) is used to switch the rotation of the evaporation flask on or off and to select the desired speed (see Chapter *8, Operating the rotary evaporator*).
In addition, the direction of rotation may be changed at regular intervals. The interval at which the direction of rotation changes is also adjusted using the hand terminal (see Chapter *8*, *Oper-*

ating the rotary evaporator). Regularly changing the direction of rotation prevents deposition of salt in the evaporation flask.

In the event of a power failure the evaporation flask is automatically lifted from the heating bath.

- **Heating bath**
  The rotary evaporator's heating bath (**15**) can be brought to and held at a temperature according to the requirements of the application in order to achieve optimal distillation.
  The heating bath may be pulled out on guide rails in order to permit the use of the widest range of evaporation flask sizes (see section *Evaporation flasks*).
  The specially shaped pouring lip makes it easier to empty the heating bath.

5.3. Hand terminal

Assembly

1 Upper grip
2 Display / Touchscreen
3 I/O switch
4 Power supply socket: 12 V DC
5 Rotating knob for:
- Entering setpoints for:
  - heating
  - rotation
  - directional change interval
  - immersion depth
- Fine adjustment of immersion depth

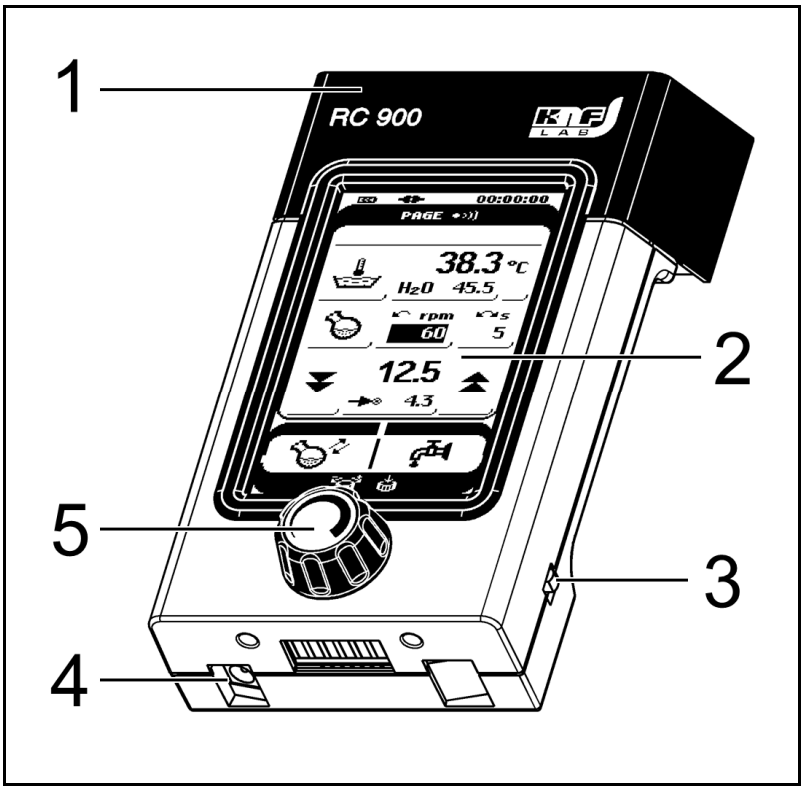

Fig. 2: RC 900 hand terminal

Function

The hand terminal is used to set the process parameters used by the RC 900 rotary evaporator.

Settings are adjusted on the hand terminal's touchscreen (Fig. 2/**2**) or with the rotary knob (**5**).

The wireless hand terminal may be removed from its mount on the rotary evaporator (observe transportation safeguard Fig. 1/**4**, page 12) in order to control the rotary evaporator remotely. This makes it

convenient to control the evaporator while it is located under a closed fume hood.

Whenever the hand terminal is located in the mount while the rotary evaporator is turned on, the batteries in the hand terminal will charge automatically. The batteries will charge even if the hand terminal is switched off. Alternatively, the batteries can be charged through the hand terminal's included power supply (see mains socket (**4**) on the hand terminal).

The power supply also makes it possible to supply the hand terminal with electrical power directly from a mains.

A single tone on the hand terminal will indicate when the batteries are nearly exhausted.

6. Installation and connection

➔ Connect the rotary evaporator only under the operating parameters and conditions described in Chapter 4. Technical data (page 9).

➔ Observe all notices related to the device's intended use and safety procedures (see Chapter 2 and 3, page 5ff).

WARNING

Damage to the rotary evaporator may result in personal injury caused by poisoning or explosion.

Hazardous gases and vapors may be produced during distillation.

➔ Air drawn out of the rotary evaporator must be safely diverted.

6.1. Installation

Shipment

The rotary evaporator may be carried only by the components labeled in Fig. 3. Carrying the rotary evaporator by any spot other than the indicated spots may result in damage to the unit.

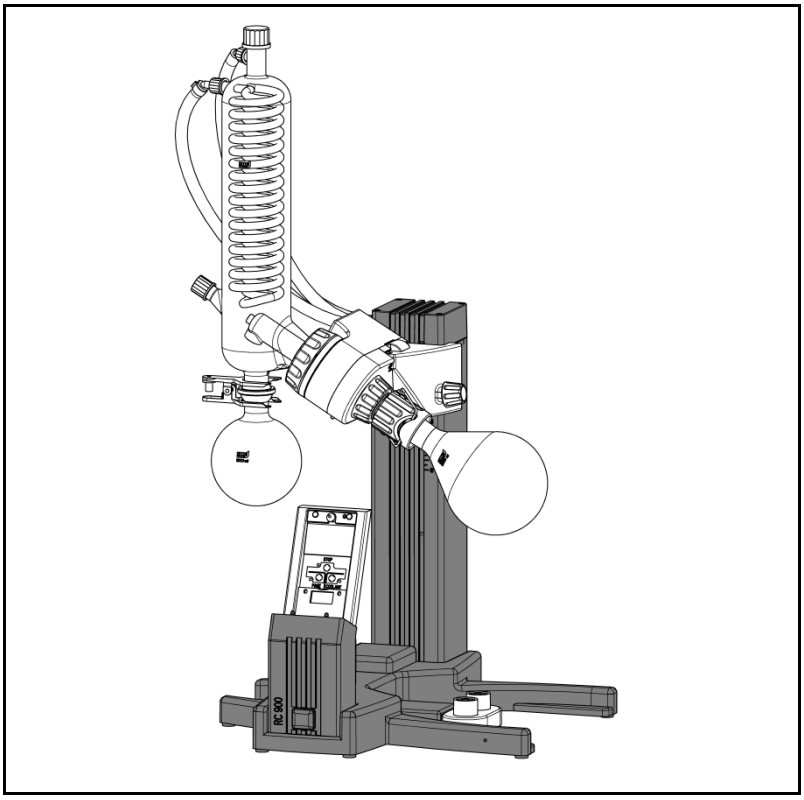

Fig. 3: Carrying the rotary evaporator

➔ Before installation, allow the rotary evaporator to come to ambient temperature at the installation location.

Installation location

➔ Make sure that the installation location is dry and the rotary evaporator is protected against water in the form of rain, spray, splashes and drips.

➔ Choose a safe location (flat, stable surface) for the rotary evaporator.

➔ Protect the rotary evaporator from dust.

➔ Protect the rotary evaporator from vibration and impact.

Connected components

➔ Attach to the rotary evaporator only those components that are designed for the rotary evaporator's pneumatic data and/or coolant-supply parameters (see Chapter 4, page 9).

Remove transportation safeguard

The rotary evaporator's hand terminal is secured at the factory in order to prevent damage during transportation. The transportation safeguard must be disengaged before the hand terminal can be removed. To do this, rotate the knurled knob (Fig. 1/**4**, page 12) out until the hand terminal can be removed.

ℹ The transportation safeguard can be screwed back in before transporting the rotary evaporator in the future.

Installing the heating bath

Place the included heating bath (Fig. 1/**15**, page 12) onto the base connector.
Once in place, the heating bath can be shifted along the axis of rotation (see Chapter 4 *Technical data* for maximum pull-out length).

Installing the chilled condenser

ℹ When installing glass parts, observe an adequate amount of space above the rotary evaporator because the glass structure may exceed the dimensions of the rotary evaporator itself.

The chilled condenser (Fig. 1/**7**, page 12) is delivered uninstalled. Install as follows:

1. Loosen tension nut (**10**) for chilled condenser until the chilled condenser can be inserted.
2. Insert chilled condenser (**7**).
3. Retighten tension nut (**10**) for chilled condenser.

i To finish tightening the tension nut, grasp the chilled condenser with your other hand and use it as a lever (see Fig. 4).

- - - - Tighten tension nut

—— Use chilled condenser to aid in fully tightening the tension nut.

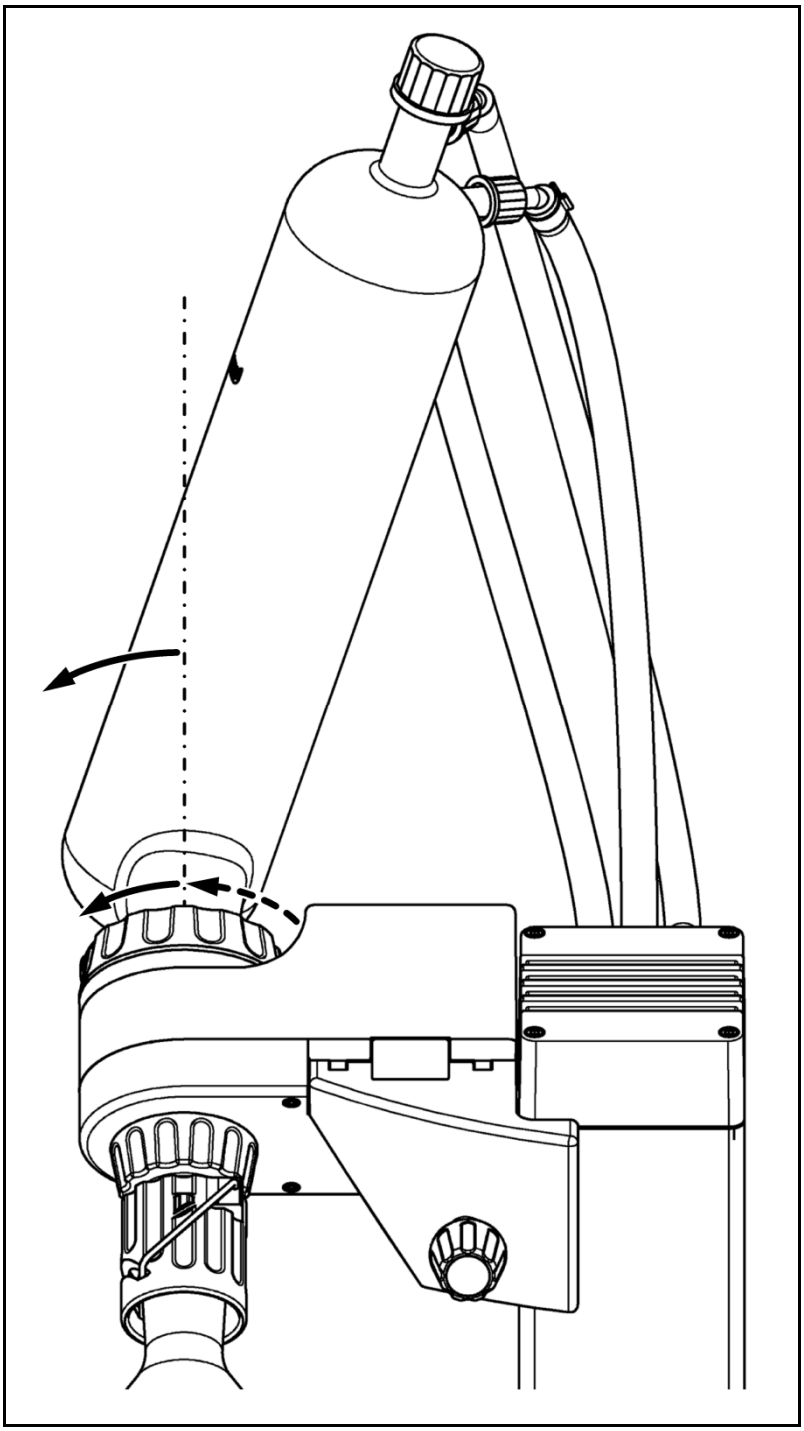

Fig. 4: Fully tightening the tension nut

4. Attach tubing (Fig. 5/**1** and **2**) or fill the cold trap with dry ice.

WARNING

Extreme cold may cause personal injury

There is a danger of serious local freezing when handling dry ice.

➔ Observe the manufacturer's hazard notices.

ℹ The hoses and connections are color-coded to simplify assignment (see Legend in Fig. 5).

ℹ Connect the vacuum lines only to the left side of the tower (see Fig. 5). The internal connection here has elevated chemical resistance (see Chapter 4, *Technical data*).

1 Vacuum - black
2 Coolant inlet - blue
3 Coolant outlet - red

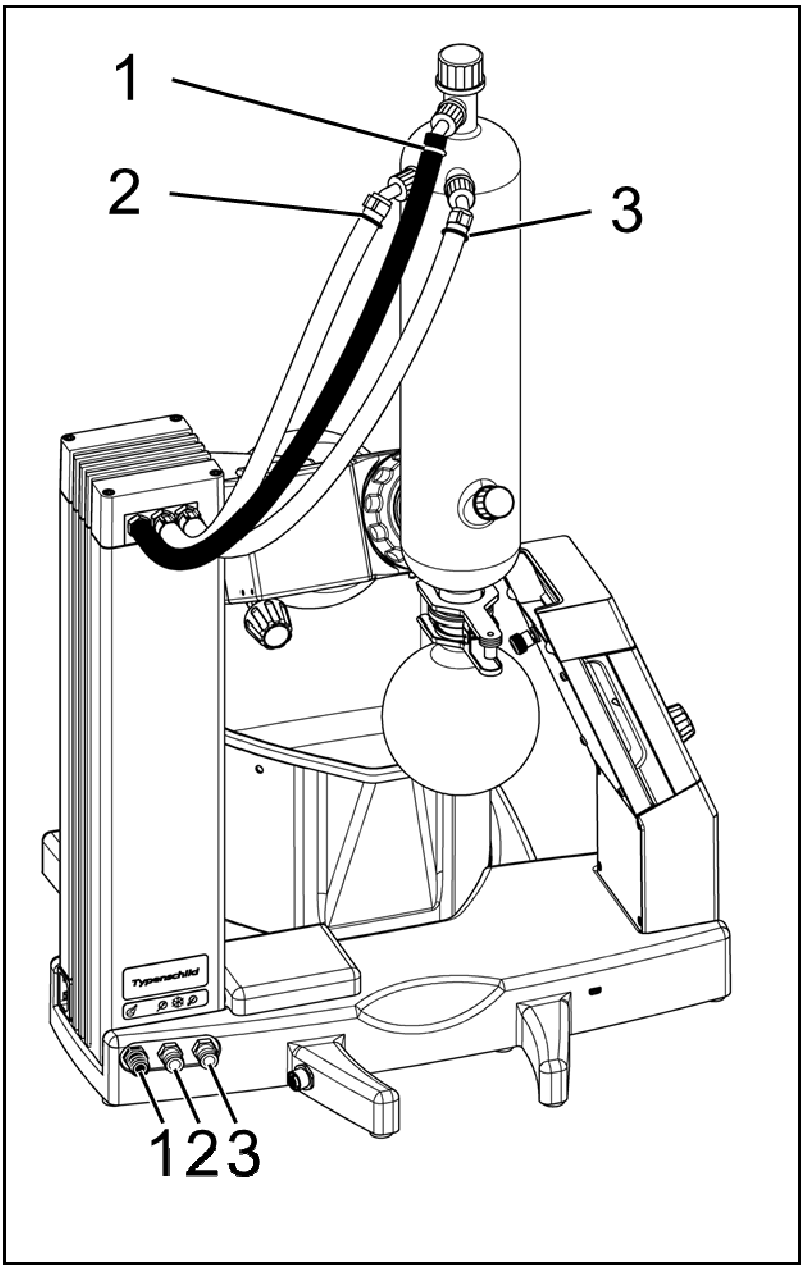

Fig. 5: Attaching lines for coolant and vacuum

The chilled condenser is now fastened to the rotary evaporator.

ℹ In order to ensure a proper seal, retighten the tension nut once more while under vacuum.

Removing the chilled condenser

Requirements:

- Loosen tubing
- Remove collection flask (see below)

1. Loosen tension nut (**8**) until the chilled condenser may be pulled out.

ℹ When loosening the tension nut, grasp the chilled condenser with your other hand and use it as a lever (refer to Fig. 4).

2. Remove chilled condenser (**7**).

Install the separately included collection flask (Fig. 1/**3**, page 12) using the included flask clip (Fig. 1/**5**, page 12).

Remove collection flask and empty if necessary

Requirements:

- Rotary evaporator must be ventilated

WARNING

Potential for personal injury by poisoning

When opening the process space, such as when removing the flasks, residual solvent vapor may enter the surrounding atmosphere.

➔ Vacuum out any solvent vapors (under fume hood, for example).

WARNING

Potential for personal injury by hazardous materials

The distillate located in the collection flask may be a hazardous material.

➔ Observe all safety regulations and disposal requirements for the distillate!

Installing the collection flask

Loosen the flask clip (Fig. 1/**5**, page 12) and remove the collection flask (Fig. 1/**3**, page 12). Empty the collection flask if necessary.

Install evaporation flask

Install the included evaporation flask (Fig. 1/**13**, page 12) as follows:

WARNING

Danger of injury from glass splinters, chemical reactions (solvent with heating medium), solvent, and hot liquids.

The evaporation flask may slide down during installation and become damaged (glass breakage).

➔ When tightening the flask nut, make sure the fastening clip is not lifted.

1. Loosen flask nut (**11**) by about 2-3 revolutions.
2. Slide evaporation flask (**13**) onto the tapered adapter. The flask nut's (**11**) fastening clip must audibly engage. If it does not, further loosen the flask nut and try sliding the evaporation flask back into place.

ℹ The wire clip now securely holds the evaporation flask in place.

3. Tighten evaporation flask via vacuum or by lightly tightening the flask nut (**11**).
4. Adjust the angle and heating bath position to the size of the evaporation flask.
5. When working outside the fume hood, put the protective cover (see Chapter 11, *Spare parts and accessories*) into place.

The evaporation flask is now installed and secure.

Removing evaporation flask

Requirements:

- Completely lift out the evaporation flask and allow it to cool sufficiently.
- Stop rotation
- Rotary evaporator must be ventilated

WARNING

Potential for personal injury by poisoning

When opening the process space, such as when removing the flasks, residual solvent vapor may enter the surrounding atmosphere.

➔ Vacuum out any solvent vapors (under fume hood, for example).

WARNING

Potential for personal injury by hazardous materials

The solvent located in the evaporation flask may be a hazardous material. Additionally, mixing with the heating medium may produce hazardous materials.

➔ Observe all safety regulations and disposal requirements for the solvent!

1. If present, open or lift off the protective cover (see Chapter 11, *Spare parts and accessories*).

ℹ If the protective cover is opened while the above requirements are not fulfilled, a warning tone will be emitted and a warning message will appear in the hand terminal's display.

2. If the flask nut (**11**) is tightened, loosen it.

WARNING

Danger of burns from hot media.

If the flask nut is rotated too far out, there will be a danger that the evaporation flask could fall into the heating bath.

➔ Make sure that the flask nut is loosened by no more than three revolutions.

ℹ If the evaporation flask is securely in place, the flask nut can be used to assist in removal.

ℹ The fastening clip prevents the evaporation flask from sliding out.

3. Grasp the evaporation flask and lift up the fastening clip.

WARNING

Danger of burns from hot surfaces.

Skin contact with the hot evaporation flask may result in burns.

➔ Allow evaporation flask to cool
➔ Grasp evaporation flask at the cooler neck.

4. Pull off evaporation flask

Adjusting inclination of evaporation flask

Set the evaporator flask's angle of inclination via the rotary knobs (**12** and **20**).

Adjusting evaporator flask's immersion depth

WARNING

Danger of injury from glass splinters, chemical reactions (solvent with heating medium), solvent, and hot liquids.

Evaporation flask and flask nut may collide with the wall or floor of the heating bath during lowering and become damaged (glass breakage).

➔ Always monitor lowering of the evaporation flask. (If necessary, adapt the heating bath position, inclination, and immersion depth to the size of the evaporation flask).

Adjust the immersion depth of the evaporation flask using the hand terminal (see Chapter 8, *Operating the rotary evaporator*).

ℹ In the event of power failure, the evaporation flask will automatically move out of the heating bath and into its upper terminal position in the interest of safety.

Installing refilling valve (*accessory*)

If needed, install the refilling valve (see Chapter 11, *Spare parts and accessories*) (see Fig. 6) as follows:

1 PTFE tube
2 Refilling valve
3 Drip washer

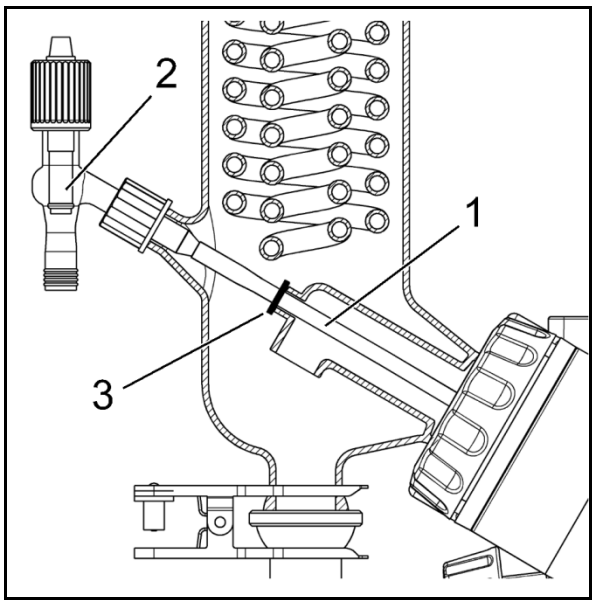

Fig. 6: Position of drip washer

1. Slide the PTFE tube (**1**) onto the refilling valve's (**2**) corresponding glass fitting.
2. Slide the drip washer (**3**) onto the PTFE tube (**1**).
3. Insert the PTFE tube (**1**) through the chilled condenser and into the evaporation flask.

   Ideally, the drip washer (**3**) will rest on the insertion tube (see Fig. 6).
4. Position the refilling valve (**2**) and securely tighten the union nut.

The refilling valve is now installed.

Installing the protective cover (*accessory*)

- If the rotary evaporator is not operated under a fume hood (heating temperature no more than 90°C), then installation of the protective cover on the heating bath is mandatory for protection against implosion (airborne glass splinters and liquid) and hot spray water!
- The protective cover may be used only with heating bath temperatures up to 90 °C. When temperatures are higher, the evaporator must be used without the protective cover and under a fume hood!
- The protective cover is not included in delivery and must be ordered separately (see Chapter 11, *Spare parts and accessories*).
- Do not carry the heating bath by the protective cover!

1. Install the protective cover (Fig. 7/**1**) on the heating bath (**2**).
2. Fasten protective cover (**1**) on heating bath:
   To do this, tighten the three knurled screws (**3**).

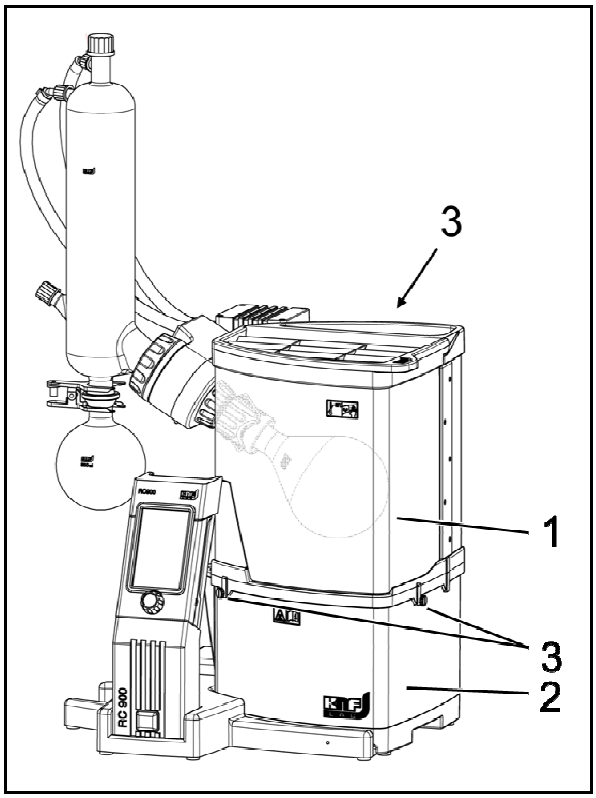

Fig. 7: Protective cover closed

The walls of the protective cover are transparent, permitting observation of events inside the evaporator flask. It also has a flap (Fig. 8/**1**) that permits rapid access to the evaporator flask.

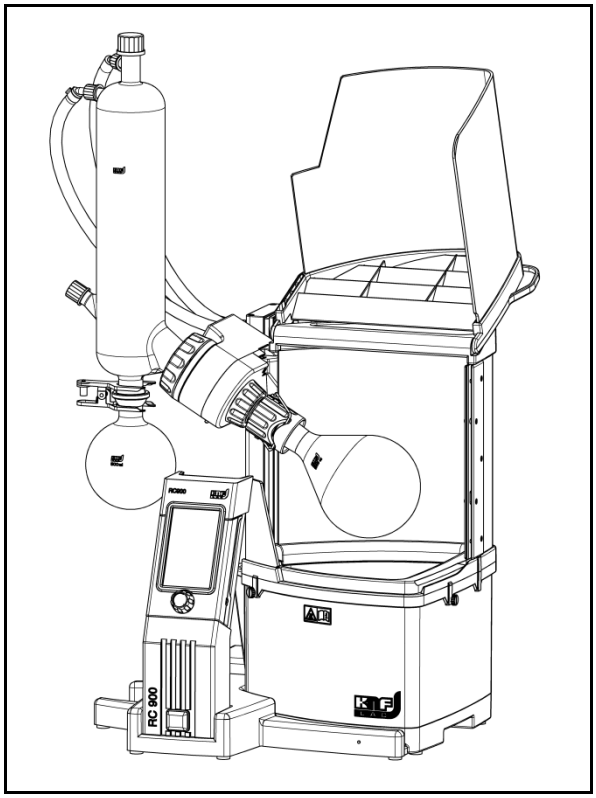

Fig. 8: Protective cover open

The protective cover and flap are monitored electronically. Using the hand terminal, you can select how the rotary evaporator will react when the protective cover is removed or the flap opened during operation (see Chapter 8.1).

When working without the protective cover (under fume hood), electronic monitoring of the protective cover must be deactivated at the hand terminal (see Chapter 8.1.2).

6.2. Connections

1. Connect the suction side of the vacuum pump to the vacuum connection (Fig. 5/**1**, page 19).

ℹ Use a vacuum hose for this purpose.

ℹ Safely divert gas emissions (from the pump) so no gases escape into the ambient air.

2. Install coolant feed and return lines on the chilled condenser (Fig. 5/**2**, page 19, connections exchangeable).

ℹ Connect only the KNF coolant valve (see Chapter 11.2, Accessories) to the coolant valve connection (Fig. 1/**20**, page 12). Consult with KNF before using any other valves.

ℹ If the rotary evaporator is cooled by a cold trap with dry ice, additional coolant is not required.

3. If present, connect the coolant valve (accessory) into the feed line (see Fig. 9).

WARNING

Danger of bursting from overpressure

When the coolant valve is installed into the return line or the return line is blocked in any other way, the chilled condenser's permissible operating pressure may be exceeded.

➔ Install the coolant valve into the feed line only.

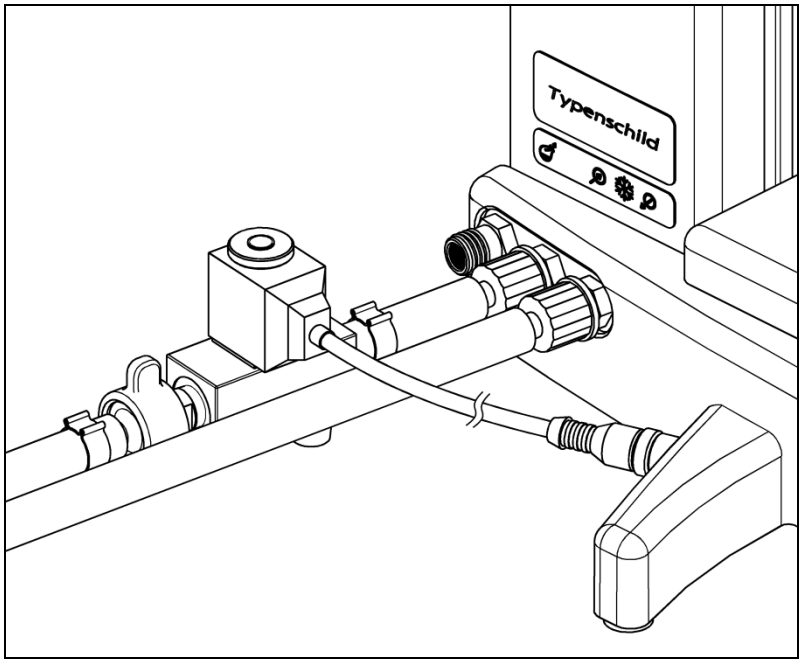

Fig. 9: Connecting coolant valve.

4. If necessary for safety reasons, connect an inert gas feed line in order to ventilate the glass parts.
5. Insert the power cable plug into a properly installed grounded socket.

7. Operation

7.1. Initial start-up

Before switching on the rotary evaporator, check the following points:

Prerequisites for start-up
▪ All hoses attached properly ▪ Specifications of the power supply correspond with the data on the rotary evaporator's type plate. ▪ Coolant connection on the chilled condenser is operational. ▪ The rotary evaporator is at room temperature. ▪ The user has the correct hand terminal for the rotary evaporator. ▪ User assures that the lift drive can move freely and without obstruction.

Tab. 4

➔ Operate the rotary evaporator only with the operating parameters and conditions described in Chapter 4. Technical data (page 9).

➔ Make sure the rotary evaporator is used properly (see Chapter 2.1, page 5).

➔ Eliminate the possibility of improper use (see Chapter 2.2, page 6).

➔ Observe the safety precautions (see Chapter 3, page 7).

DANGER

Uncontrolled operation may result in personal injury and damage to the rotary evaporator.

When using several rotary evaporators simultaneously, there is the danger of confusing them, which can result in undesired interference into other processes: If commands are entered into the wrong hand terminal, uncontrolled reactions may occur in the associated rotary evaporator.

➔ Before each use, make sure you are using the right hand terminal for the desired rotary evaporator. The paging function may be used for this purpose (see *Paging* , page 40).

➔ In addition, colour-coded stickers may be applied to rotary evaporators and hand terminals that belong together (see Chapter *11, Spare parts and accessories*).

WARNING

Uncontrolled operation may result in personal injury and damage to the rotary evaporator.

If the wireless connection between the hand terminal and rotary evaporator is broken, the rotary evaporator will continue to operate with the current parameters.

➔ Immediately determine and remove the cause of the interruption between the hand terminal and rotary evaporator (Chapter 10, page 48).

If you do not succeed in restoring the wireless connection, place the hand terminal onto the rotary evaporator (Chapter 8.1.1, page 33ff). Alternatively, the rotary evaporator may be operated directly (Chapter 8.2, page 41).

WARNING

Inadequate cooling may result in personal injury and damage to the rotary evaporator.

If cooling is inadequate, there will be a danger of the vacuum pump system sucking solvent vapors from the chilled condenser.

➔ Make sure that no solvent can enter the ambient atmosphere in the event of a cooling failure.

i In order for the chilled condenser to recover solvent from the rising gas, it must be cooled with a coolant.

If using a coolant valve:

WARNING

Danger of bursting of chilled condenser

➔ Ensure that the coolant valve is installed only in the coolant **feed line**.

Inspecting and emptying collection flask

Check the fill level of condensate in the collection flask (Fig. 1/**3**, page 12) at suitable intervals. Empty the collection flask if necessary.

Shifting heating bath

The position of the heating bath must be adapted to the size and inclination of the evaporation flask.

Filling heating bath

WARNING

Danger of burns from hot media.

Hot vapors may be produced when filling the heating bath.

➔ Ensure that the heating bath temperature is always lower than the boiling temperature of the medium.
Note that if the water level is low or the heating bath is running dry, the actual temperature of the heating coil may be significantly higher than the indicated temperature.

WARNING

Danger of burns from hot media.

When lowering the evaporation flask into the heating bath, the heating bath may overflow if the fill volume is too high.

➔ When filling the heating bath, consider how the evaporation flask will displace the heating medium in the bath.

WARNING

Danger of burns from hot media.

Hot media may be spilled when sliding or carrying the heating bath.

➔ Make sure that the heating bath is sufficiently cooled before sliding or carrying.

i The heating bath contains a scale that indicates the maximum fill volume based on the size of the selected evaporation flask. To more accurately estimate the proper filling volume, the evaporation flask may be lowered into the heating bath before filling (see Chapter 8, *Operating the rotary evaporator*).

Fill heating bath with medium.

Refilling evaporation flask

WARNUNG

Danger of burns from hot surfaces

If the heating bath is not filled sufficiently, the bottom of the heating bath in particular can overheat.

➔ Make sure that the heating bath is always sufficiently filled with medium and does not run dry during operation by evaporation.

i At an insufficient water quantity (dry start or dry run) the heating bath switches off automatically with an error message (see Chapter 10).
The temperature of the heating coil is limited double (electronically and electromechanically).

WARNING

Danger of personal injury from poisoning or explosion

Hazardous mixtures may be produced when refilling the evaporation flask.

➔ Ensure that this does not result in a hazardous situation.

Using the refilling valve, the evaporation flask may be refilled under vacuum during operation, as follows:

1. Connect the source of medium to the refilling valve.
2. Open the refilling valve.

The additional medium will be drawn into the evaporation flask.

Switching on the rotary evaporator

➔ Switch on the rotary evaporator at the power switch (see Fig. 1/**17,** page 12).

➔ Switch on hand terminal at its I/O switch (see Fig. 2/**3,** page 14)**.**

ℹ Refer to Chapter 8, page 33 for information on operating the rotary evaporator.

7.2. Stopping operation

➔ Stop the ongoing process (press STOP key on hand terminal or on membrane keypad).

➔ Ventilate rotary evaporator

WARNING

Damage to the rotary evaporator may result in personal injury caused by poisoning or explosion.

Ventilation of the rotary evaporator may result in poisonous or explosive mixtures.

➔ If necessary, ventilate the rotary evaporator with inert gas.

➔ Switch off rotary evaporator at the power switch (Fig. 1/**17,** page 12).

➔ Switch off hand terminal at its I/O switch (see Fig. 2/**3,** page 14)**.**

WARNING

Uncontrolled operation may result in personal injury and damage to the rotary evaporator.

If the hand terminal is switched off while the rotary evaporator remains switched on, the rotary evaporator will continue to operate with the current settings.

➔ Always switch the rotary evaporator off when done working.

WARNING

Danger of burns from hot media.

Skin contact with hot surfaces and medium may occur when emptying the heating bath and evaporation flask.

➔ Allow heating bath and evaporation flask to cool completely.

➔ Empty heating bath

WARNING

Potential for personal injury by hazardous materials

The media located in the evaporation and collection flasks may be hazardous materials.

➔ Observe all safety regulations and disposal requirements for the media!

WARNING

Potential for personal injury by poisoning

When opening the process space, such as when removing the flasks, residual solvent vapor may enter the surrounding atmosphere.

➔ Vacuum out any solvent vapors (under fume hood, for example).

➔ Empty evaporation and collection flasks.

➔ Stop the feed of coolant, separate any coolant connections.

➔ Separate vacuum connection, if present.

8. Operating the rotary evaporator

8.1. Hand terminal

8.1.1. General functions and displays

1 Upper grip
2 Display / Touchscreen
3 I/O switch
4 Power supply socket: 12 V DC
5 Rotating knob for:
- Entering setpoints for:
  - heating
  - rotation
  - directional change interval
  - immersion depth
- Fine adjustment of immersion depth

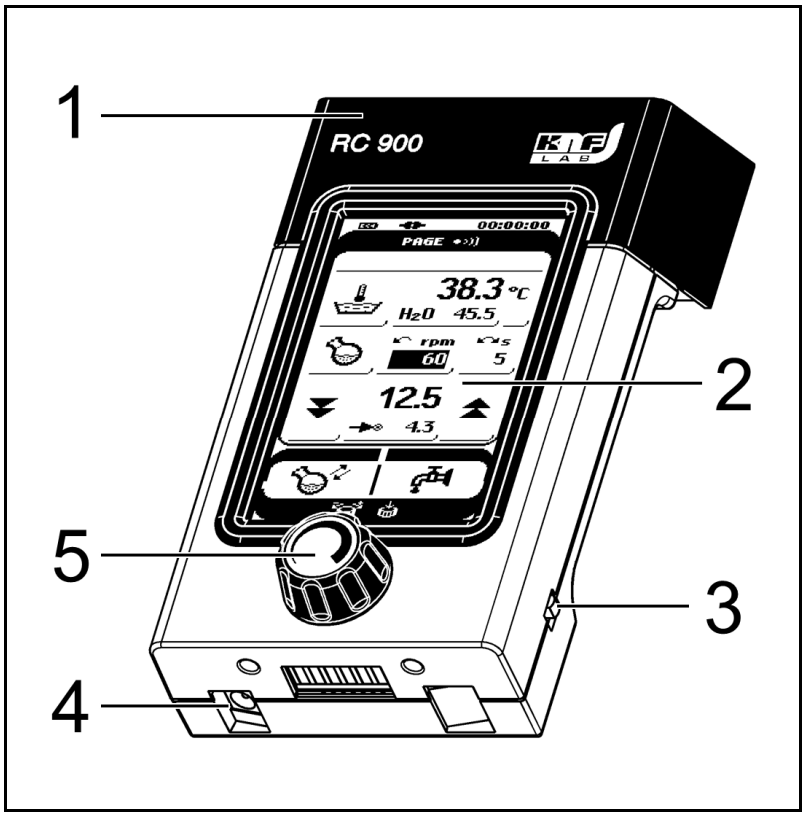

Fig. 10: Hand terminal

The rotary evaporator is operated via the hand terminal with the aid of:

- rotary knob (Fig. 10/**5**) and
- touchscreen (Fig. 10/**2**).

The **rotary knob** has the following functions:

- Rotate the knob:
  - Enter setpoints for:
    - temperature of heating bath
    - rotation speed
    - optimal time interval for changing direction of rotation
    - immersion depth of evaporation flask
  - Fine adjustment of immersion depth
- Press the knob:
  - Switch between entering of speed setpoint and fine adjustment of immersion depth.

Touchscreen contents:

- Display of heating bath temperature and height of evaporation flask (Fig. 12/**4**+**5** , page 35);
- Menu for selecting temperature display's units of measure (Fig. 13/**4**)
- Input fields (Fig. 13) for setpoints:
  - Heating bath temperature (**5**)
  - Rotation speed (**6**)
  - Optimal time interval for changing direction of rotation (**7**)
  - Immersion depth (**8**)
- Operating keys (Fig. 13) with the functions:
  - switch heating bath on and off (**2**)
  - switch rotation on and off (**1**)
  - raise and lower evaporation flask (**11**, **8**)
  - open and close coolant valve (accessory) (**10**)

During wireless operation, the hand terminal optimizes battery life by switching to energy-conservation mode and gradually darkening the screen after 15 seconds without input.

The keys are inactive when the screen is dark. Tap on the display to re-activate the display and keys.

Picking up and replacing hand terminal

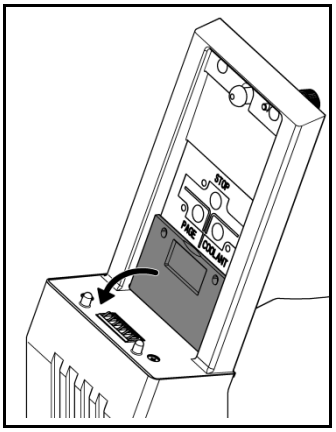

Fig. 11: Flipping down contact cover

Pick up the hand terminal from the rotary evaporator as follows: Grasp hand terminal at upper grip (Fig. 10/**1**) and pull until it releases (remove transportation safeguard if necessary, see Ch. 6).

Flipping down the contact cover (Fig. 11) protects the electrical contacts on the bottom on the holder.

Replace hand terminal as follows:
Replace the hand terminal by putting its underside onto the holder for the hand terminal (Fig. 1/**1**, page 12); then firmly press the hand terminal at the upper grip (Fig. 10/**1**) until it engages.

Whenever the hand terminal is located in the mount while the rotary evaporator is turned on, the batteries in the hand terminal will charge automatically. The batteries will charge even while the hand terminal is switched off.

Before each use of the hand terminal, confirm that the hand terminal belongs to the desired rotary evaporator. The paging function may be used for this purpose (see *Paging* , page 40).

Displays

1 Battery:
- Charging
- Charging status

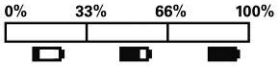

2 Connection to rotary evaporator

- Direct connection:
- Wireless connection:
- No connection: n.c.

3 Process time
4 Actual temperature of heating bath in selected units or error message when indicated (see tab. 10)
5 Actual height of flask
6+7 Notice on operation of rotary knob
8 Heating medium H_2O / oil according to base setting (see Chapter 8.1.2)

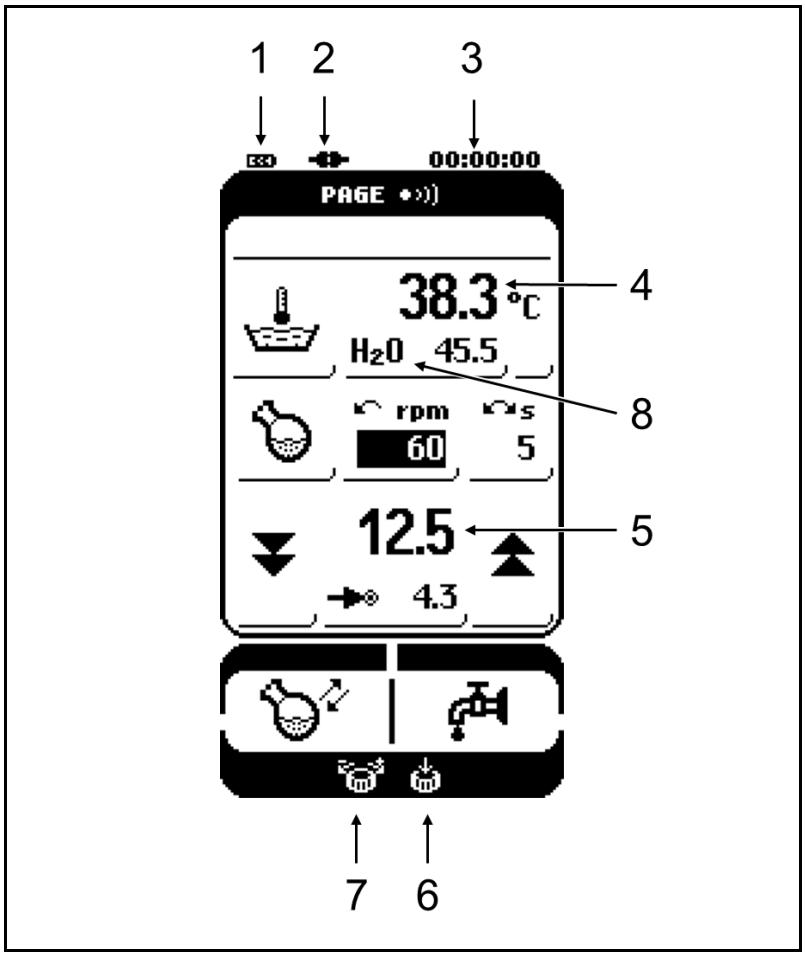

Fig. 12: Displays on the touchscreen

Menus, fields, and buttons

1 Button Rotation ON/OFF (symbol flashes when rotation ON)
2 Button Heating bath ON/OFF (symbol flashes when heating bath ON)
3 Button Call rotary evaporator (paging)
4 Menu Temperature units
5 Input field Heating temperature setpoint
6 Input field Speed
7 Input field for time interval of optional directional change
8 Button Raise flask
9 Button/input field for immersion depth setpoint
10 Button to OPEN/CLOSE coolant valve (accessory) (Symbol inverted when coolant valve open)
11 Button to lower flask
12 Button Exchange flask

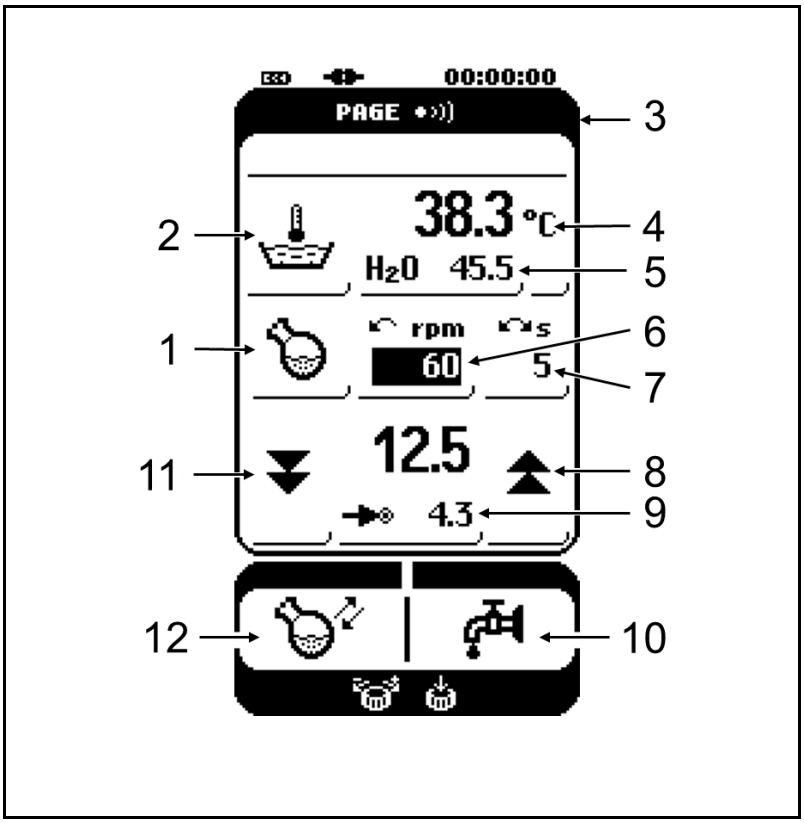

Fig. 13: Menus and buttons on touchscreen

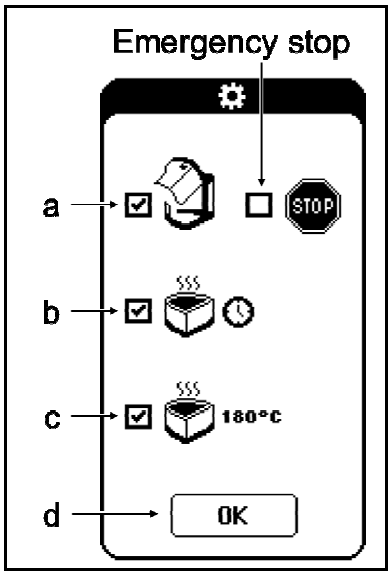

Fig. 14: Start menu

8.1.2. Operation

Base settings

After the hand terminal is switched on, the start screen will appear for 2-3 seconds. To open the Start menu (Fig. 14), press the gear symbol.

a) Activate/deactivate electronic monitoring of the protective cover.

If the rotary evaporator is not operated under a suitable fume hood, the protective cover (accessory) must be used (see Chapter 6.1) and electronic monitoring must be switched on. To do this, select the "Safety" checkbox.

If electronic monitoring is activated, an additional "EMERGENCY STOP" check box will appear. This defines how the rotary evaporator will react if the protective cover is opened or removed during operation:

- EMERGENCY STOP inactive:
  A warning tone will sound.
- EMERGENCY STOP active:
  A warning tone will sound. After 3 seconds, the evaporation flask will be raised from the heating bath and rotation will stop.

Deactivate electronic monitoring when operating the rotary evaporator under a suitable fume hood without the protective cover.

b) (De)activate automatic switch-off of the heating bath

The heating bath's automatic switch-off is activated by the "Save energy" check box. This feature will switch off the heating bath if the

- flask mechanism (Fig. 1/**9**) is in the highest position and
- rotation is switched off for a period of two hours.

c) Select heating medium

Heating temperatures in the water bath are only possible up to max. 100°C (= 212°F = 373 K). For higher heating temperatures with special heating media (typically silicone oils) the corresponding check box has to be activated.

d) Close Start menu

Press the "OK" button to accept the entered base settings and close the Start menu.

Switch heating bath and rotation of evaporation flask on and off

The buttons with the heating bath and evaporation flask symbols are used to switch the heating bath and rotation of the evaporation flask on and off (see Fig. 13/**1** + **2**).

When the heating bath or rotation of the evaporation flask is switched on, the corresponding symbol will flash (Fig. 13/**1** + **2**).

Entering setpoints

The following setpoints may be entered through the touchscreen:

*Button on touchscreen**	*Function*	*Setpoint range*
5	Heating temperature - [°C] - [°F]	 20…180 68…356
6	Speed [rpm]	25…250
7	Interval for changing direction of rotation [s]	5…120 (0 = off)
8	Immersion depth	0…10

Tab. 5 ** according to Fig. 13*

- Press input field for the desired setpoint.

The selected input field will be highlighted on the display with a black background.

- Use rotary knob to adjust setpoint.
- After 2 seconds, the display returns to the starting state.

In the starting state, the input field for speed is selected. Therefore, speed can be changed directly via the rotary knob at any time without first pressing the associated field.

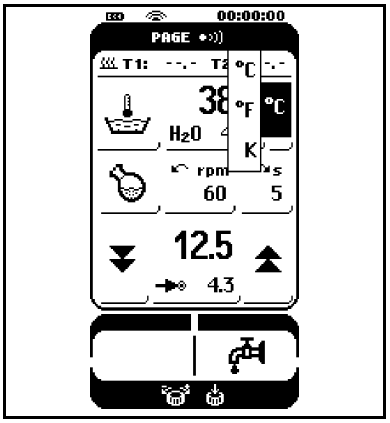

Fig. 15: Temperature units menu

Selecting temperature unit

The heating bath temperature can be displayed on the hand terminal (Fig. 13/**4**) in either °C, °F, or K.

Use the Temperature units menu to select the temperature units (button on touchscreen; see Fig. 13/**5** and Fig. 15).

Raising and lowering the evaporation flask

Use the arrow keys on the touchscreen to raise and lower the evaporation flask (see Fig. 13/**9** + **12**):

- If the arrow key (**9**) is pressed and held for longer than 2 seconds while raising the evaporation flask, the evaporation flask will automatically move into the upper stop position.

- Use the arrow key (**12**) to lower the evaporation flask down to the selected immersion depth setpoint (**8**).

Changing the immersion depth

Immersion depth can be changed using the following functions:

- Change the setpoint (see *Entering setpoint*). The setpoint will be approached directly when the Lower button (Fig. 13/**12**) is pressed.
- Fine adjustment by pressing and then turning the rotary knob.

ℹ If pressed again, or if no input is made after 2 seconds, the display will return to the starting state (rotary knob again adjusts speed directly).

ℹ You can override the current setpoint with fine adjustment.

ℹ If a new immersion depth is initiated with the fine adjustment, it can be adopted as the new setpoint by pressing and holding the setpoint button (Fig. 13/**8**).

Automated exchange of evaporation flask

CAUTION

Danger of burns from hot parts

Glass parts and the heating bath may be hot even after the rotary evaporator has been shut off.

➔ Allow the rotary evaporator to cool off after operation.

If a distillation shall be repeated several times in the same manner, the “Exchange flask” button may be used.

Requirements

- Evaporation flasks must be of the same size and shape

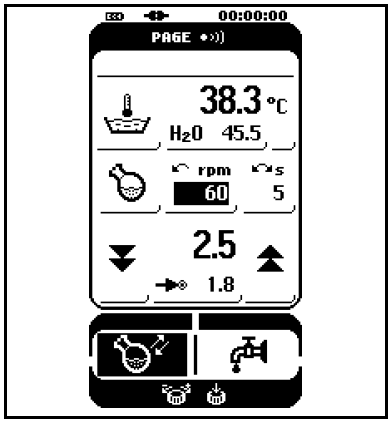

Fig. 16:Press and hold the “Exchange flask” button.

a) Activate “Exchange flask” button

1. Start rotation and select the desired immersion depth and speed.
2. Press and hold the “Exchange flask” button for three seconds until it indicates that it is active (see Fig. 16 + 17).
   The current immersion depth (see Fig. 12/**5**) will be stored as the new setpoint (Fig. 13/**9**).

b) Exchange the evaporation flask:

WARNING

Danger of injury from glass splinters, chemical reactions (solvent with heating medium), solvent, and hot liquids.

When using the “Exchange flask” key, any changes to the size or shape of the evaporation flask may cause the flask to collide with the heating bath tank or other parts.

➔ When exchanging the evaporation flask, make sure that the size and shape of the flask are the same.

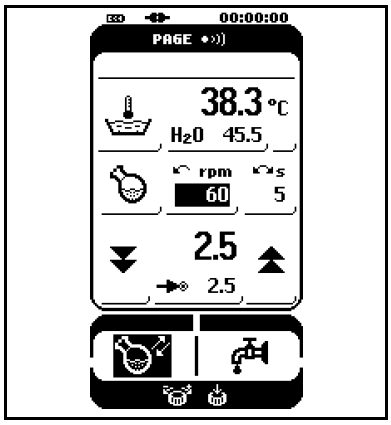

Fig. 17: “Exchange flask” button active

1. Press the active button “Exchange flask”:
   The flask is raised in a controlled manner and rotation stops.

ℹ At the same time, a slow rotation prevents foaming of the flask contents and spraying of the heating medium.

2. Change the evaporation flask
3. Press the active button “Exchange flask”:

   The flask will be lowered in a controlled manner to the previous immersion depth and the rotation accelerated to the previous speed.

c) Deactivate “Exchange flask” button:

➔ Modify speed, immersion depth, or setpoint thereof.

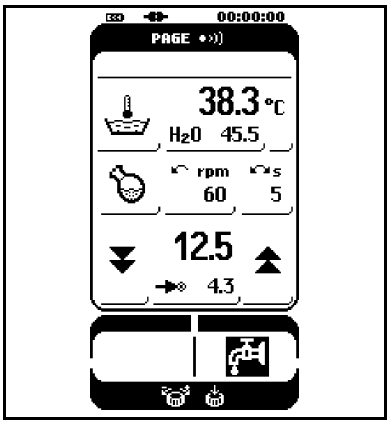

Fig. 18: Open coolant valve

Opening and closing coolant valve (accessories)

Use the button with the water cock symbol (Fig. 13/**10**) to open and close the coolant valve on the chilled condenser.

When the coolant valve is open, the symbol will have a black background (see Fig. 18).

Paging the hand terminal

When the paging button on the rotary evaporator (Fig. 19/**2**) is pressed, the hand terminal responds with a signal tone (see also Chapter 8.2).

Vice versa, the LED next to the paging button (Fig. 19/**2**) on the rotary evaporator will flash if the "Page rotary evaporator“ symbol (Fig. 13/**3**) is pressed in the hand terminal's display.

No wireless connection

If there is no wireless connection between the hand terminal and the associated rotary evaporator (for example if the rotary evaporator is not switched on or the wireless connection is being established or is interrupted):

- "n.c." will appear in the hand terminal's display (see Fig. 12/**2**);
- an audible warning will be emitted if a button on the touchscreen is pressed.

Refer to Chapter 10, Table 9 for tips on resolving this problem.

8.2. Operation without hand terminal

The following actions can be taken directly on the rotary evaporator when the hand terminal is removed (Fig. 19):

- stop process (**1**) – the evaporation flask will be raised, rotation and heating switch off
- page the hand terminal; the hand terminal will answer with a signal tone (**2**).
- open and close coolant valve (accessory) (**3**). The LED illuminates when the coolant valve is open.

1 "Stop process" button
2 Page hand terminal
3 Button to open/close coolant valve (accessory)

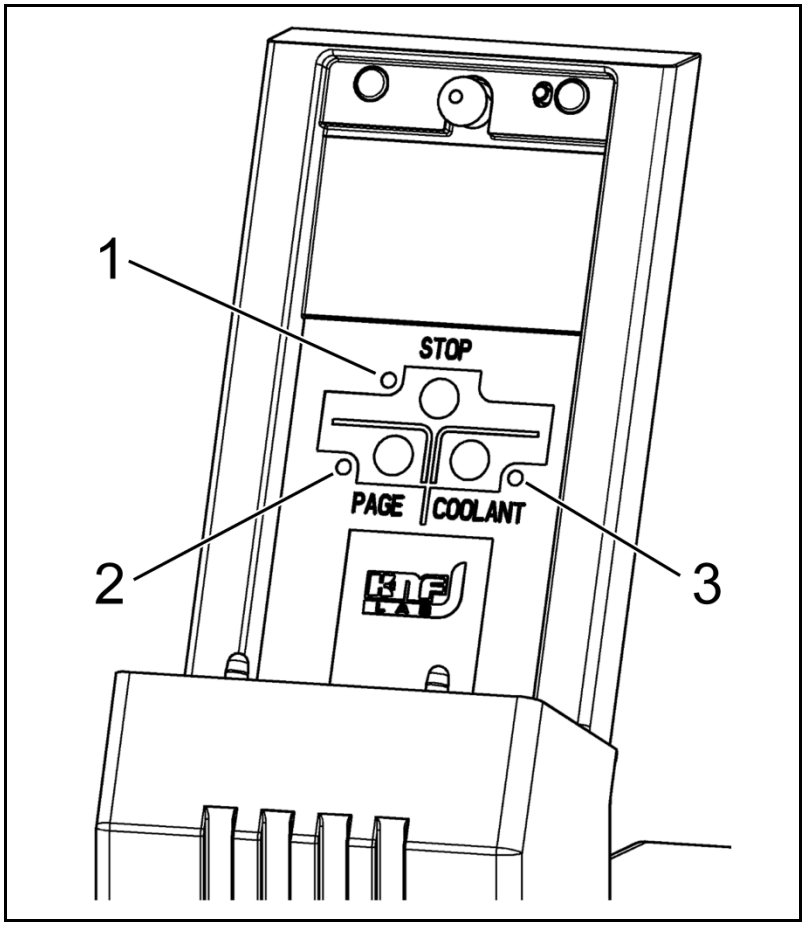

Fig. 19: Buttons on the RC 900 rotary evaporator

8.3. Changing the evaporation flask

See Chapter 6.1 for information on installing and removing the evaporation flask.

ℹ It may be necessary to coordinate the angle of inclination, heating bath position, and immersion depth (lower stop position).

9. Servicing

If you have any questions about servicing, call your KNF technical adviser (see last page for contact telephone number).

9.1. Servicing schedule

Component	Maintenance interval
Rotary evaporator	Inspect regularly for external damage or leaks
Heating bath medium	Inspect regularly for contamination of the heating medium

Tab. 6

9.2. Cleaning

ℹ When cleaning, make sure that no liquids enter the inside of the housing.

WARNING

Danger of personal injury from hazardous materials

After operation, the components of the rotary evaporator may be contaminated with aggressive materials.

➔ Always wear protective clothing (protective glasses, gloves, etc.) as required for worker safety in a laboratory.

9.2.1. Cleaning the rotary evaporator

➔ Clean the outside of the rotary evaporator with a moist towel only. Do not use flammable cleaning agents.

9.2.2. Cleaning glass parts

Requirements

- Glass parts adequately cooled
- Rotary evaporator must be ventilated
- For chilled condenser only:
  - Remove any coolant that is present

- Chilled coil/cooling trap at room temperature

Collection flask

1. Remove collection flask (see Ch. 6.1)
2. Dispose of contents in collection flask according to local regulations.
3. Rinse collection flask with suitable cleaning agent.
4. Re-install collection flask (see Ch. 6.1)

Evaporation flask

4. Remove evaporation flask (see Ch. 6.1).
5. Dispose of contents in evaporation flask according to local regulations.
6. Rinse evaporation flask with suitable cleaning agent.
7. Re-install evaporation flask (see Ch. 6.1)

Chilled condenser

1. Remove chilled condenser (see Ch. 6.1).
2. Rinse chilled condenser with suitable cleaning agent.
3. Re-install chilled condenser (see Ch. 6.1)

Vapor tube

1. Remove vapor tube (see Ch. 9.3).
2. Rinse vapor tube with suitable cleaning agent.
3. Re-install vapor tube (see Ch. 9.3)

9.2.3. Clean seal

1. Remove seal (see Ch. 9.4)
2. Clean seal with suitable cleaning agent.
3. If necessary, clean seal receiver with suitable cleaning agent.
4. If necessary, clean vapor tube (see Ch. 9.2.2).
5. Re-install seal (see Ch. 9.4)

9.2.4. Clean heating bath

Requirements

- Heater must be shut off
- Heating bath adequately cooled
- Evaporation flask in upper stop position
- Protective cover removed (if present)

1. Remove heating bath
2. Dispose of contents of heating bath according to local regulations.
3. Clean heating bath with suitable cleaning agent.
4. Re-install heating bath

9.2.5. Cleaning protective cover (accessory)

Rinse protective cover with clear water; clean with a soft cloth.

ℹ Synthetic glass scratches easily and is sensitive to solvents.

9.3. Changing vapor tube

Requirements

- Rotary evaporator disconnected from mains power and de-energized
- Heating bath empty
- Evaporation flask removed (see Ch. 6.1).
- Rotary evaporator free of hazardous materials
- Rotary evaporator must be ventilated
- Protective cover removed (if present)

WARNING

Dangerous substances in the rotary evaporator can cause a health hazard

Depending on the distilled solvent, caustic burns or poisoning are possible.

➔ Wear protective clothing if necessary, e.g. protective gloves.

CAUTION

Danger of burns from hot parts

Glass parts and the heating bath may be hot even after the rotary evaporator has been shut off.

➔ Allow the rotary evaporator to cool off after operation.

1. Screw off flask nut (Fig. 20/**1**).

ℹ With the other hand, hold the vapor tube's (**2**) tension nut.

2. Loosen the vapor tube's (**2**) tension nut until the vapor tube (**3**) can be pulled out.

ℹ While doing this, press and hold the block for the rotation drive (**4**).

3. Pull out the vapor tube (**3**).
4. Insert the new vapor tube (**3**) until it engages.

ℹ If you have difficulty finding the engagement point, slightly tighten the tension nut after inserting the vapor tube.

ℹ Finding the engagement point may also be easier when the condenser is removed (see Ch. 6.1).

5. Lightly tighten the vapor tube's tension nut (**2**).

ℹ While doing this, press and hold the block for the rotation drive (**4**).

6. Screw on the flask nut (**1**).

ℹ With the other hand, hold the vapor tube's tension nut (**2**).

1 Flask nut
2 Vapor tube's tension nut
3 Vapor tube
4 Block for the rotation drive

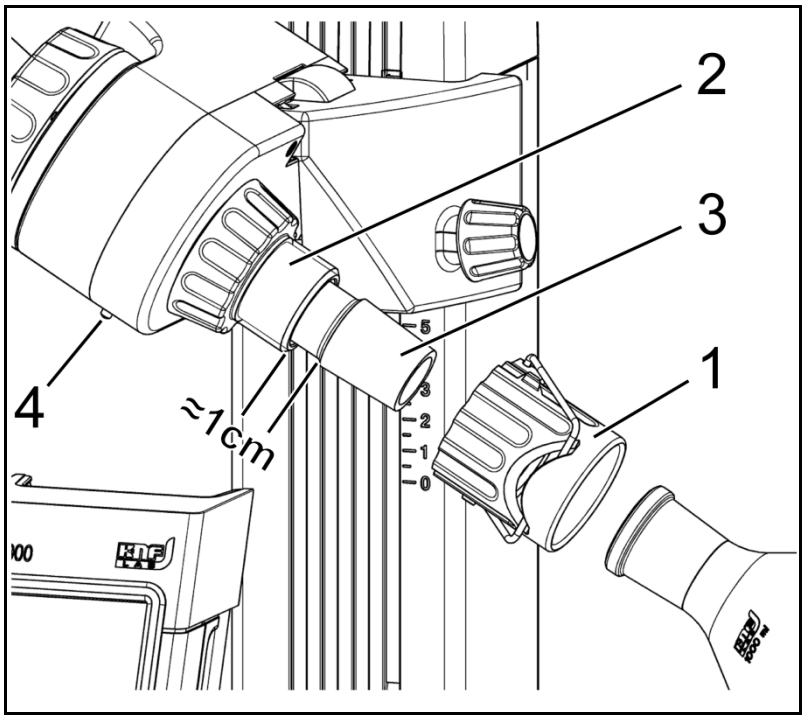

Fig. 20: Changing vapor tube

9.4. Changing seal

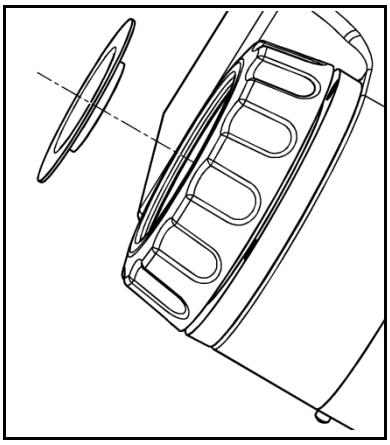

Fig. 21: Aligning the seal

1. Remove chilled condenser (see Ch. 6.1).
2. Remove vapor tube (see Ch. 9.3).
3. Remove old seal (see Fig. 21).
4. Re-install vapor tube (see Ch. 9.3)
5. Slide the new seal (see Ch. 11.1 "Spare parts") onto the vapor tube.

   ℹ The lip of the seal must be aligned inward (see Fig. 21).

6. Install vapor tube (see Ch. 9.3).
7. Install chilled condenser (see Ch. 6.1).
8. Properly dispose of old seal.

9.5. Changing fuses

Requirements

- Rotary evaporator disconnected from mains power and de-energized
- Heating bath empty
- Rotary evaporator free of hazardous materials

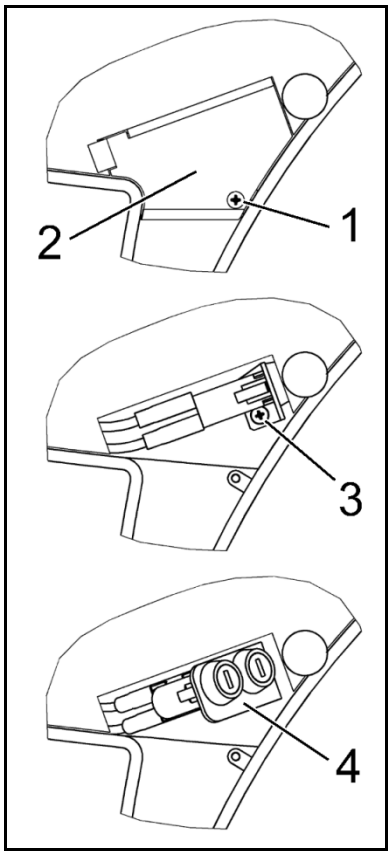

Fig. 22: Changing fuses

CAUTION

Danger of burns from hot parts

Glass parts and the heating bath may be hot even after the rotary evaporator has been shut off.

➔ Allow the rotary evaporator to cool off after operation.

1. Loosen screw (Fig. 22/**1**) and remove cover (**2**).
2. Loosen screw (**3**) and remove fuse holder (**4**).
3. Use a regular head screwdriver to open the fuse holder (**4**); replace old fuses with new ones (refer to Chapter 4, page 9 for fuse specifications).
4. Re-close fuse holder (**4**) and install.
5. Replace cover (**2**).

9.6. Inspecting protective conductor

The arrows in Fig. 23 indicate the contact points on the rotary evaporator that are necessary for inspecting the protective conductor.

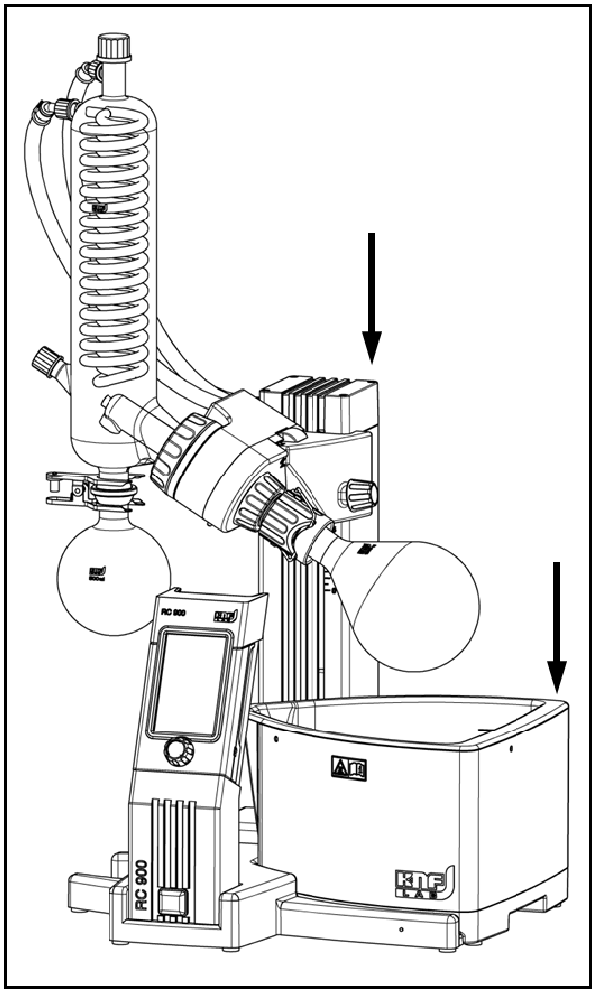

Fig. 23: Contact points for inspecting protective conductor

9.7. Changing batteries on the hand terminal

Required tool

Qty	Material
1	Phillips screwdriver no. 2

Tab. 7

1. Loosen the six screws on the underside of the hand terminal.
2. Remove the rear cover plate.
3. Replace the batteries.

ℹ Refer to Chapter 4.2, page 11f for required battery specifications.

ℹ Never use new batteries together with used batteries. All batteries must be replaced simultaneously.

4. Re-install cover plate.
5. Dispose of batteries according to regulations.

10. Troubleshooting

DANGER

Risk of electric shock, danger of death

➔ Separate the rotary evaporator from the power supply before working on the rotary evaporator.

➔ Make sure that the pump is de-energised.

- Rotary evaporator generally: see Tab. 8.
- Hand terminal: see Tab. 9.
- Error message in the display: see Tab. 10

Rotary evaporator generally		
Error	**Possible cause**	**Remedy**
The rotary evaporator is switched on, but the power switch does not illuminate.	Power cable not plugged in.	➔ Plug the rotary evaporator's mains power cable into a properly installed grounded socket.
	No voltage in the mains.	➔ Check the room's fuses.
	Power cable's internal fuse is burned out.	➔ Use a suitably-sized power cable (see rotary evaporator's type label for power consumption) ➔ Replace power cable's fuse if necessary.
	Fuses in rotary evaporator are blown.	1. Identify and eliminate cause of overload. 2. Change the rotary evaporator's mains fuses (see Ch. 9.5, page 46).
The desired vacuum is not reached.	The attached vacuum device is inadequate.	➔ Attach an adequate vacuum device.
	Leaks in the tubing connections at the tower and chilled condenser.	➔ Check tubing, fittings, and union nuts; tighten or replace as necessary.
	Sealing caps on chilled condenser have leaks.	➔ Check the caps' internal seals; retighten / replace as necessary.
	The refilling valve (accessory) is not fully closed.	➔ Close the refilling valve. ➔ Securely tighten the refilling valve's through cap. Check the cap's seal if necessary.
	The rotary drive's seal is worn.	➔ Replace seal (see Ch. 9.4)
	The vapor tube's sealing surface is damaged.	➔ Replace vapor tube (see Ch. 9.3)

The rotary drive does not achieve the selected speed or does not move.	Flask drive blocked by foreign parts.	➔ Remove foreign parts.
	The wrong speed setpoint has been selected.	➔ Correct the setpoint (see Ch. 8.1.2, page 36)
	Condensate residue is adhered to the seal.	➔ Clean seal (see Ch. 9.2.2, page 42)
Evaporation flask cannot be lowered / raised.	Evaporation flask or flask nut collide with the heating bath.	➔ Lift evaporation flask (see Ch. 8.1.2, page 34) or reposition heating bath. Observe Chapter 6.1 (page 16) when immersing evaporation flask.
	Foreign parts / objects are blocking lift drive.	➔ Remove foreign parts / objects.
	Setpoint for immersion depth is achieved.	➔ Modify the setpoint for evaporation flask's immersion depth (see Ch. 8.1.2, page 34).
Heating bath does not heat.	Heating bath is not switched on (symbol in display not flashing).	➔ Switch on heating bath (see Ch. 8.1.2, page 33)
	Insufficient heating medium in heating bath (see table 10 for error message).	➔ Refill heating medium (see Ch. 7.1, page 27)
	Heating bath has no electrical contact.	➔ Make sure heating bath sits properly on rotary evaporator. ➔ Make sure no foreign parts are underneath heating bath.
	Thermal protective switch has triggered	➔ Reset protective switch (see fig. 24, page 50)
Condensate in separators / vacuum system's secondary condensers.	Cooling capacity inadequate for the volume of vapor (chilled condenser backs up with liquid).	➔ Ensure that the chilled condenser is supplied with sufficient cooling medium (observe volume and temperature, Ch. 2.1). ➔ Adapt vapor volume to available cooling capacity.
Inside of chilled condenser is fogged up to the vacuum connection.		
The “Exchange flask” button does not activate.	Rotation is not switched on or the evaporation flask is not immersed.	➔ Start rotation and set the desired immersion depth and speed (see Chapter 8.1.2).

Tab. 8: General troubleshooting

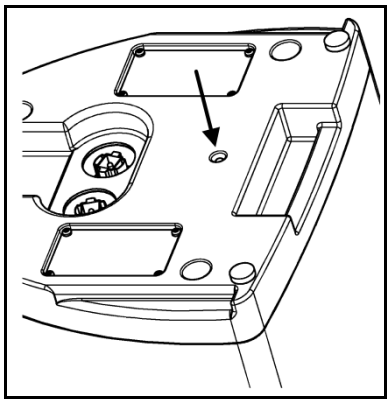

Fig. 24: Resetting the heating bath's protective switch

Resetting the heating bath's thermal protective switch

If an error occurs and the temperature of the heating bath exceeds 240°C the protective switch will automatically switch off the heating bath. The protective switch must then be reset manually, as follows:

1. Allow heating bath to cool
2. Empty heating bath
3. Determine cause of error and remove

i If you are unable to determine the cause of the error, call your KNF technical adviser (see last page for telephone number).

4. Reset the thermal protective switch

i Use a pointed object such as a pencil or a pointed tool to press the button on the underside of the heating bath (see arrow in 24).

Hand terminal		
Error	**Possible cause**	**Fault remedy**
Hand terminal cannot be taken from the rotary evaporator.	Transportation safeguard was not removed.	➔ Remove transportation safeguard (see Chapter 6.1).
Hand terminal's display stays dark.	Hand terminal is not switched on.	➔ Switch on hand terminal.
	Batteries in hand terminal are drained / nearly exhausted	➔ Charge batteries, as follows: a) Place hand terminal onto switched-on rotary evaporator or b) Connect included power supply to hand terminal.
Hand terminal's signal tone sounds.		
The rotary evaporator does not respond to the entries: a) Wireless operation Display "Wireless connection" (see Fig 7/**2** page 31)	The hand terminal belongs to a different RC 900 rotary evaporator (in operation).	➔ Use the paging function (see Ch. 8.1.2, page 40) to determine whether the correct hand terminal is used.
b) Wireless operation Display "No connection" Audible warning whenever a key is pressed.	The hand terminal belongs to a different RC 900 rotary evaporator (not in operation)	
	The rotary evaporator is shut off.	➔ Switch on rotary evaporator with mains power switch. Mains power switch must illuminate.
	Wireless connection is disturbed.	➔ Check whether the hand terminal is being used outside the wireless range. ➔ Make sure that the wireless space is not disturbed by electric devices or metal objects. ➔ If necessary, place hand terminal onto rotary evaporator in order to confidently identify wireless connection as the source of the problem.
c) Hand terminal in holder. Display "No connection"	The contacts on the underside of the hand terminal or in the rotary evaporator's holder are dirty.	➔ Clean contacts.
Batteries do not charge even though hand terminal is on the rotary evaporator.	Hand terminal did not engage cleanly. Display "Wireless connection" (see Fig. 12/**2** page 35)	➔ Apply pressure to the hands terminal's upper grip (Fig. 10/**1**, page 33) until it engages.
	Rotary evaporator is not switched on.	➔ Switch on rotary evaporator
The hand terminal's maximum service duration in wireless operation is noticeably shorter.	Batteries at end of service life.	➔ Change batteries (see Chapter 9.7, page 47).
Temperature display shows implausible values.	Temperature units were modified.	➔ Select the desired temperature units.

Tab. 9: Hand terminal troubleshooting

Error message in the display	
Error code	Meaning
E01	Insufficient heating medium in heating bath.

Tab. 10: Error message

Disturbance persists

If you are still unable to diagnose the problem, please send the rotary evaporator to KNF customer service (see address on last page).

1. Clean rotary evaporator, heating bath, and any parts that contact medium (see Chapter 9.2.1, page 42).
2. Rinse vacuum and coolant lines on and in the tower in order to remove hazardous or aggressive materials.
3. Send the rotary evaporator, together with completed Health and Safety Clearance and Decontamination Form (Chapter 13, page 56), to KNF stating the nature of the distilled medium.

11. Spare parts and accessories

11.1. Spare parts

Spare part	Order No.
Seal	113046
Battery set for hand terminal (see Chapter 9.7, page 47).	117427
Power supply for hand terminal with adapter plug (EURO, UK, US, AUS)	125524
Power cable D	026363
Power cable CH	027523
Power cable UK	129326
Power cable USA/JP	127875
Norprene® hose, ID6 (sold by meter*)	055535
Hose fitting ID6 with cap GL14	301092
Hose clamp ID6	127329
Collection flask 500 ml (coated)	128158
Flask clamp collection flask	025968
Evaporation flask 1000 ml NS29/32	128159
Evaporation flask 1000 ml NS24/40	128893
Vapor tube NS29/32	126059
Vapor tube NS24/40	128762
Flask nut NS29/32	126056
Flask nut NS24/40	128781
Mains fuses - 240 V, 50/60Hz: T 8 (2x) - 115 V, 50/60Hz: T 15 (2x) NOTE: Observe Chapter 9.5 when changing fuses.	 136067 136309

Tab. 11 ** indicate desired length in whole meters*

11.2. Accessories (also see chapter 6)

Accessories	Order No.
Protective cover for heating bath NOTE: Always activate the protection function when using the protective cover outside of a suitable fume hood (see Chapter 8.1.2).	127204
Refilling valve	300639
Coolant valve set	300853
Insulation for cooling hoses	301270
Chemical-resistant protective membrane for hand terminal's display.	117407
Norprene® hose, ID10 (sold by meter*)	028187
Hose fitting ID10 with cap GL14	301198

Tab. 12 ** indicate desired length in whole meters*

11.3. Glass product

Glass product		Order No.
Collection flask (coated)	100 ml	300557
	250 ml	300558
	500 ml	128158
	1000 ml	113939
	2000 ml	113938
Evaporation flask NS29/32	50 ml	113079
	100 ml	113080
	250 ml	113081
	500 ml	113082
	1000 ml	128159
	2000 ml	113083
	3000 ml	113084
Evaporation flask NS24/40	50 ml	300561
	100 ml	300562
	250 ml	300563
	500 ml	300564
	1000 ml	128893
	2000 ml	300565
	3000 ml	300566
Powder flask NS29/32	500 ml	300588
	1000 ml	300589
	2000 ml	300590
Powder flask NS24/40	500 ml	300591
	1000 ml	300592
	2000 ml	300593
Foam brake	NS29/32	301114
	NS24/40	301115

Tab. 13

12. Returns

Pumps and systems used in laboratories and process-based industries are exposed to a wide variety of conditions. This means that the components contacting pumped media could become contaminated by toxic, radioactive, or otherwise hazardous substances.

For this reason, customers who send any pumps or systems back to KNF must submit a Health and safety clearance and decontamination form in order to avoid a hazardous situation for KNF employees. This Health and safety clearance and decontamination form provides the following information, among other things:

- physiological safety
- whether medium-contacting parts have been cleaned
- whether the equipment has been decontaminated
- media that have been pumped or used

and must declare physiological safety. To ensure worker safety, work may not be started on pumps or systems without a signed Health and safety clearance and decontamination form.

For optimal processing of a return, a copy of this declaration should be sent in advance via e-mail, regular mail, or fax to KNF Customer Service (refer to final page for address). In order to avoid endangering employees who open the shipment's packaging, despite any residual hazards, the original version of the Health and safety clearance and decontamination form must accompany the delivery receipt on the outside of the packing.

The template for the Health and safety clearance and decontamination form is included with these Operating Instructions and may also be downloaded from the KNF website.

The customer must specify the device type(s) and serial number(s) in the Health and safety clearance and decontamination form in order to provide for the unambiguous assignment of the Declaration to the device that is sent to KNF.

In addition to the customer's declaration of physiological safety, information about operating conditions and the customer's application are also of importance to ensure that the return shipment is handled appropriately. Therefore, the Health and safety clearance and decontamination form requests this information as well.

13. Health and safety clearance and decontamination form

Form: Rev. 00 / download: www.knf.com

Health and safety clearance and decontamination form

This declaration must be present and complete (the original must accompany the shipment's delivery receipt) before the returned device can be examined.

Device type: .....

Serial number(s): .....

.....

.....

Reason for returning the device (please describe in detail):

(The device(s) was(were) in operation ☐ yes ☐ no)

.....

.....

.....

.....

.....

We confirm that the above device(s)

☐ has(have) pumped exclusively **physiologically unobjectionable** media and that it(they) are free of hazardous materials and any materials that are harmful to health.

The device(s) was(were) cleaned ☐ yes ☐ no

☐ has(have) pumped media of the following category(categories) which are not physiologically unobjectionable and that cleaning of the device(s) (potentially only media-contacting parts) is required.

Name, chemical formula, Material Safety Data Sheet

☐ aggressive .....

☐ biological .....

☐ radioactive .....

☐ toxic .....

☐ other .....

The device(s) was(were) decontaminated and work can proceed without special measures ☐ yes

Method / proof: .....

.....

The device(s) was(were) not decontaminated and special measures are required before starting work ☐ yes

Measures: .....

.....

Legally binding declaration

We herewith affirm that the information provided in this form is correct and complete. Shipment of the devices and components is in compliance with statutory regulations.

.....	.....	.....	.....	.....
Company (stamp)	Date	Name	Authorized signature	Position

KNF worldwide
Find your local KNF partner on www.knf.com