2xOF302-40BQ2
oil free compressor with dryer

Features
- 100% oil free
- 100% duty cycle
- compact and easy to use
- easy maintenance
- long-life, 2-year warranty
- 8000 hours cup life at 8bar
- 4000 hours maintenance interval for the dryer

Description
- built-in 2-column adsorption dryer
- pressure dew point down to -40°C
- 1µm air filtration (class 2 for dust according to ISO8573.1:2001)
- pressure regulator included
- receiver with internal coating and 5-year warranty

OTHER VERSIONS
- without dryer (2xOF302-40B)
- with soundproofing cabinet (2xOF302-40MQ2)

Product specifications

Model		2xOF302-40BQ2	
Voltage	V	1x230	1x120
Frequency	Hz	50	60
Motor	HP	1.2	1.2
	kW	0.9	0.9
Displacement	l/min	216	276
Air flow @ 8bar	l/min	60	70
	cfm	2.12	2.5
Max. pressure	bar	8	8
	psi	120	120
Max. current	A	6.8	13.2
Receiver volume	litres	40	40
	gallon	10.6	10.6
Weight	kg	59	59
	lbs	130	130
Noise level	dB(A)/1m	68	68
Duty cycle		100%	100%

Air flow / pressure curve [1)]

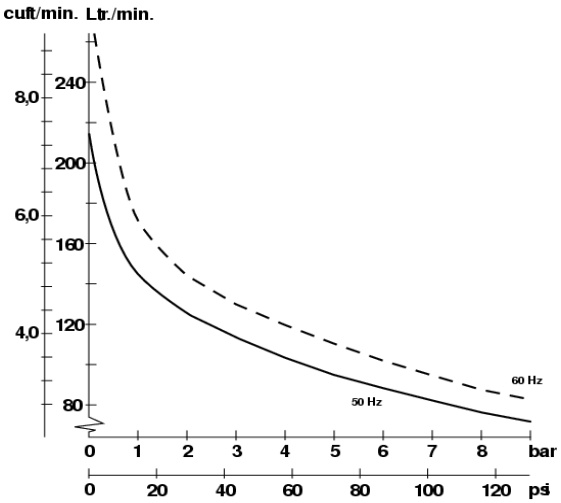

Dimensions - inches / [mm] [2)]

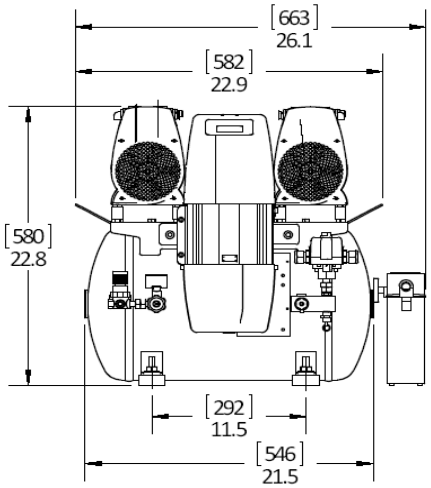

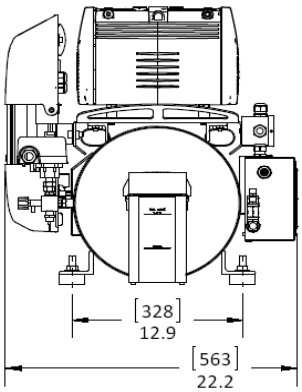

1) air flow is reduced by 18 to 20% on units with dryers

2) for unit without accessories or options

Wolf Laboratories Limited

www.wolflabs.co.uk

Wolflabs

Tel: 01759 301142 Fax:01759 301143 sales@wolflabs.co.uk

Use the above details to contact us if this literature doesn't answer all your questions.

Pricing on any accessories shown can be found by keying the part number into the search box on our website.

The specifications listed in this brochure are subject to change by the manufacturer and therefore cannot be guaranteed to be correct. If there are aspects of the specification that must be guaranteed, please provide these to our sales team so that details can be confirmed.