Model 3510
pH/mV/Temperature Meter
Operating Manual

351 050/REV B/09-06

Safety

Please read this information carefully prior to installing or using this equipment.

1. The unit described in this manual is designed to be operated only by trained personnel. Any adjustments, maintenance and repair must be carried out as defined in this manual, by a person qualified to be aware of the hazards involved.

2. It is essential that both operating and service personnel employ a safe system of work, in addition to the detailed instructions specified in this manual.

3. References should always be made to the Health & Safety data supplied with any chemicals used. Generally accepted laboratory procedures for safe handling of chemicals should be employed.

4. If it is suspected that safety protection has been impaired in any way, the unit must be made inoperative and secured against any intended operation. The fault condition should immediately be reported to the appropriate servicing authority.

Model 3510
pH/mV/Temperature Meter
Operating Manual

Contents

Section 1	**Introduction**	
	Instrument Description	1.1
	Instrument Specification	1.2
Section 2	**Installation**	
	Unpacking	2.1
	Installation	2.2
	Displays	2.3
	Keypad	2.4
	Inputs/Outputs	2.5
Section 3	**Operation**	
	Theory of pH measurement	3.1
	pH Measurement	3.2
	Preparation of Buffer Solution	3.3
	Solution Temperature Values	3.4
	Good Practice Guidelines	3.5
	Instrument Set-Up	3.6
	pH Calibration	3.7
	Error Codes	3.8
	mV Mode	3.9
	Performing Measurements	3.10
	Results Storage and Display	3.11
Section 4	**Maintenance**	
	General	4.1
	Cleaning/Re-conditioning of Glass Electrodes	4.2
Section 5	**Optional Accessories**	
	Optional Accessories	5.1
	Spares	5.2
Section 6	**Interfacing**	
	Analogue	6.1
	RS232	6.2
	Keypad Emulation	6.3
	Printing	6.4
Section 7	**Troubleshooting**	
	Troubleshooting	7.1
	Functional checks	7.2

EC Declaration of Conformity

Section 1

Introduction

1.1 Instrument Description

The Model 3510 is a general purpose pH/mV/Temperature bench meter used for routine laboratory analysis. The meter supports 1, 2 or 3 point pH calibration on either manually entered pH buffer values or automatically temperature compensated buffers to DIN, JIS and NIST standards and Jenway buffers supplied with the instrument. Up to 3 decimal place resolution is available. The 3510 includes a 32 reading memory facility.

1.2 Instrument Specification

pH (1, 2 or 3 point cal)	
Range:	-2.000 to 19.999pH
Resolution:	0.001 / 0.01 / 0.1pH
Accuracy:	±0.003pH
mV (Absolute or Relative)	
Range:	-1999 to +1999mV
Resolution:	0.1mV
Accuracy:	±0.2mV
Input Impedance:	$>10^{12}$ohms
Temperature Measuring	
Ranges:	-10 to +105°C / 14 to 221°F
Resolution:	0.1°C / 1°F
Accuracy:	±0.5°C / ±1°F
ATC Range:	0 to 100°C / 32 to 212°F
Manual Temp. Compensation:	0 to 100°C / 32 to 212°F
Auto Buffer Selection:	Jenway (2.00, 4.00, 7.00, 9.20 and 10.00) DIN (3.06, 4.65, 6.79, 9.23, 12.75) NIST (1.68, 4.01, 6.87, 9.18, 12.45) JIS (1.68, 4.01, 6.87, 9.18, 12.45) or manually entered buffers
Calibration:	User selectable 1, 2 or 3 point
Outputs:	Analogue 1mV per 0.01pH RS232
Display:	Back lit custom LCD
Power:	Power Supply 9Vac
Size:	275(l)x240(w)x150(d)mm
Weight:	850g

Section 2

Installation

2.1 Unpacking

Remove the Model 3510 from the packaging and ensure the following items are included:

1. Model 3510 pH/mV/Temperature Meter
2. Glass bodied combination pH electrode (924 005)
3. ATC probe (027 500)
4. Electrode holder
5. 4, 7 and 10pH buffer sachets
6. BNC shorting plug (009 146)
7. Power Supply (as specified at time of ordering the product)
8. Condensed operating instructions (351 051)
9. Operating Manual (351 050)

Any shortages or damage should be reported immediately to the manufacturer or your local distributor.

2.2 Installation

The Model 3510 is supplied ready to use. Connect the ATC (if required) and the pH electrode to the rear panel Temp and pH sockets.

The electrode stand requires minimal assembly (refer to the diagram below).

Fig. 2.2.1 Electrode Holder Assembly

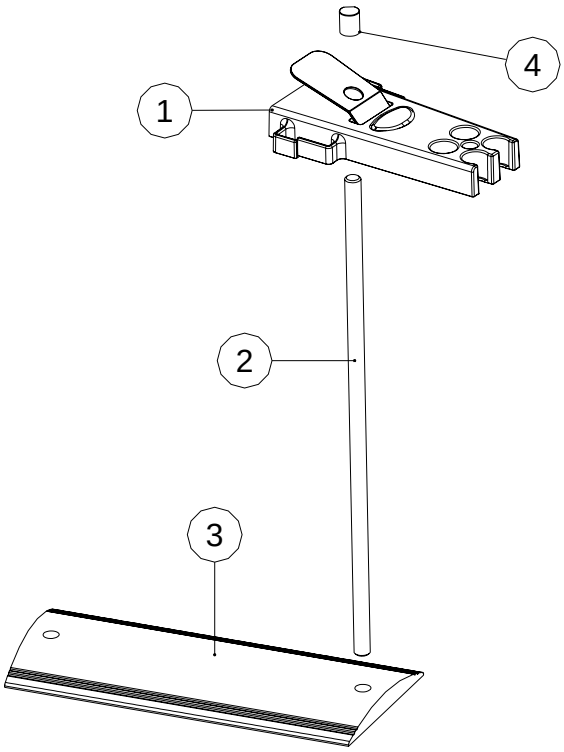

2.3 Display

Fig. 2.3.1 – Display

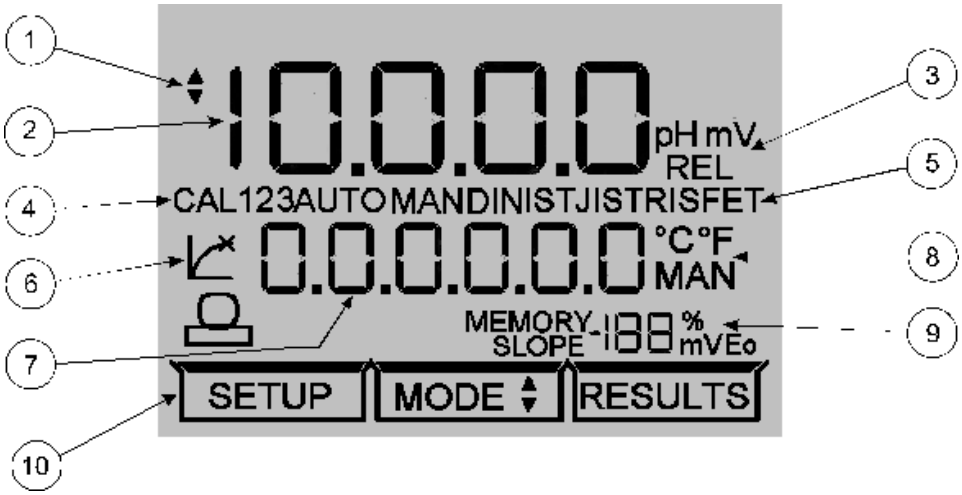

1. Symbol – displayed during set-up of instrument parameters.

2. Primary display – 4½ digit. Provides direct readout in pH and millivolts of samples and standards.

3. Mode annunciators – shows selected measurement mode; pH, mV (Absolute and Relative).

4. Calibration point – shows 1, 2 or 3 point symbol depending on level of calibration selected by the user.

5. Buffer selection – indicates whether the instrument is using manually entered or automatic selection buffers. Will show which type of buffer is being used.

6. Endpoint symbol – this symbol is displayed when the pH changes by less than 0.005pH (0.2mV) over a five second period. Once an endpoint has been detected the reading must change by more than 0.005pH (0.2mV) to clear the endpoint symbol.

7. Secondary display – 6 digit display. Provides direct readout of automatic or manual temperature. Scrolls and displays selected parameter information in set-up mode.

8. Mode annunciators – indicates temperature in °C or °F and whether the measurements are manually or automatically temperature compensated.

9. Status display – 2½ digit. Provides information relating to electrode slope value, mV Eo value at calibration and memory result number.

10. Mode tags – Each mode tag is highlighted when selected; SETUP, MODE or RESULTS.

2.4 Keypad

2.4.1 Keypad

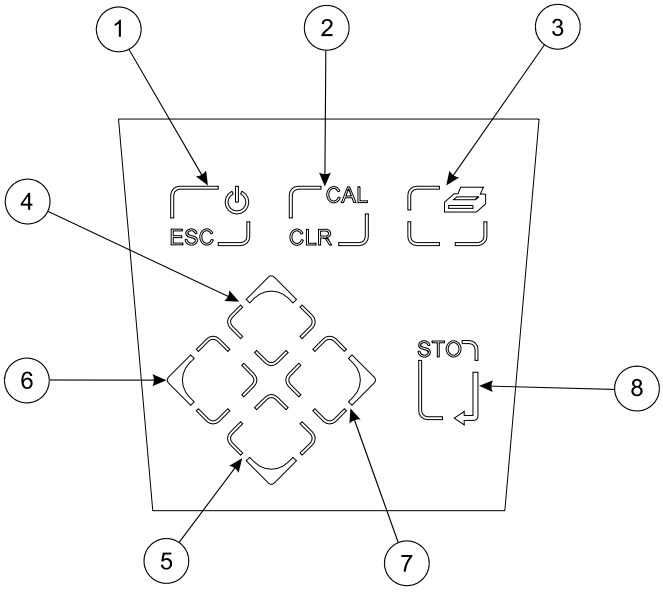

1. ESC — used to switch the instrument on and to place into standby mode (only if power supply lead remains connected to the instrument). Also used to escape/exit a mode.

2. CAL / CLR — used to select and perform a calibration sequence. This key is also used to clear readings from Memory. Used to select Abs/Rel mV in mV mode.

3. Print key — used to initiate a print.

4. Up Arrow — used for adjustment during set up, to scroll results and to toggle between mV and pH modes.

5. Down Arrow — used for adjustment during set up, to scroll results and to toggle between mV and pH modes.

6. Left Arrow — used for adjustment during set up and to move between mode tags.

7. Right Arrow — used for adjustment during set up and to move between mode tags.

8. STO — used to accept an entered value in set-up mode and to instigate a stored reading.
This key can also be used as a CAL key during calibration.

2.5 Inputs/Outputs

Fig. 2.5.1 – Rear panel layout

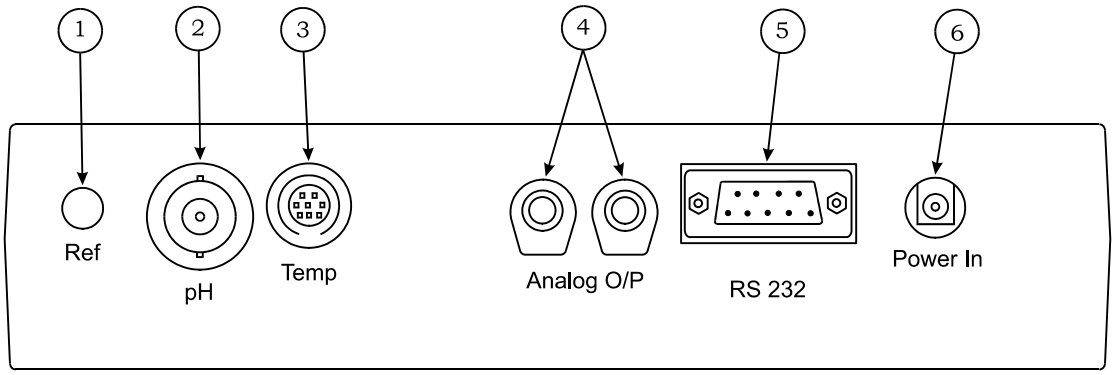

1. Ref Socket	2mm pin socket. Connection socket for separate reference electrode. When performing measurements with some pH and ion selective electrodes a separate reference electrode is needed.
2. pH Socket	BNC type socket which allows combination pH or redox electrodes to be used.
3. Temp Socket	8 pin mini-DIN socket. This allows the Automatic Temperature Compensation (ATC) probe (027 500) to be connected.
4. Analog Out	2 x 4mm sockets. Analogue output (buffered electrode potential).
5. Output Socket	9 way socket for RS232 connection.
6. Power In	AC 9V I/P socket. 2.1 x 5.5mm socket allowing the power supply to be connected to the instrument.

Section 3

Operation

3.1 Theory of pH Measurement

pH is a unit of measurement which defines the degree of acidity or alkalinity of a solution. It is usually measured on a scale of 0 to 14. The pH value quantifies the degree of hydrogen ion activity of an acid or a base in terms of hydrogen ion activity.

The internationally accepted symbol, pH, is derived from “p”, the mathematical symbol of the negative logarithm and “H”, the chemical symbol for Hydrogen. The pH value is the negative logarithm of Hydrogen ion activity as shown in the mathematical relationship $pH= -log[H^+]$.

The pH value of a substance is directly related to the ratio of the Hydrogen ion $[H^+]$ and the Hydroxyl ion $[OH^-]$ concentrations. If the concentration of H^+ is greater than OH^-, the material is acidic and has a pH value of less than 7. Conversely, if the concentration of OH^- is greater than H^+ the material is basic, with a pH value greater than 7. If the concentrations of H^+ and OH^- are equal the material is neutral with a pH value of 7.

It can, therefore, be seen that pH is a measurement of both acidity and alkalinity, even though by definition it is a selective measurement of hydrogen ion activity. The logarithmic relationship between hydrogen ion concentration and the pH unit means that a change of one pH unit represents a ten-fold change in hydrogen ion concentration.

3.2 pH Measurement

pH can be measured by using either pH papers/indicators or a pH meter, dependent on the level of accuracy required. pH papers or indicators change colour as the pH level varies. These can be used as a guide to the pH level, but can be limited in accuracy and difficult to interpret correctly in murky or coloured samples.
For greater accuracy the use of a high impedance pH meter is recommended, together with a pH measuring electrode and reference electrode.

Each component part of the measurement system can be described as follows:

a) the pH meter – is a high impedance amplifier used to accurately measure the minute electrode voltages produced. The pH meter will display the results directly in pH units on either an analogue or digital display. Voltages can also be read for special applications, ORP (Oxidation-Reduction Potential) measurements or with Ion Selective Electrodes.

b) the pH electrode – is a hydrogen ion sensitive glass bulb, with a millivolt output that varies with the changes in the relative hydrogen ion concentration inside and outside of the bulb. The pH electrode has very high internal resistance, making the voltage change with pH difficult to measure. The input impedance of the pH meter and leakage resistances are therefore important factors.

c) the reference electrode – these cells consist of an internal element, usually a silver/silver chloride wire, electrolyte (KCl) and a liquid junction. The liquid junction provides a leak path for the internal electrolyte to “weep” into the sample chamber and provide an electrical contact with the liquid to be measured. If the liquid junction is inefficient then measurement will be inaccurate. It is common for the reference electrode to be incorporated into the pH electrode. It is then called a combination electrode. The Model 3510 meter is supplied with a combination electrode.

The voltage developed by each individual pH electrode in the presence of a known hydrogen ion concentration is theoretically predictable, but in practise deviations from the theoretical value can be expected. These deviations will change slowly during the life of an electrode. It is therefore essential to routinely calibrate the system using solutions with a known and constant pH value. These solutions are called buffers.

3.3 Preparation of Buffer Solutions

Care must be taken in the preparation of all buffer solutions. The correct quantity of distilled or deionised water should be used when preparing the solutions. For accurate and repeatable results it is essential to follow the manufacturers instructions carefully.

3.4 Solution Temperature Values

The value of all buffer solutions varies with solution temperature. For accurate calibration of electrodes using buffer solutions, it is necessary to measure the temperature of the buffer solution being used. The unit should then be calibrated to the corrected pH value. Manufacturers of buffer powders and solutions will provide a table of values at varying temperatures for their buffers.

Note: **Buffer solutions will contaminate with exposure to air and should be stored in airtight containers when not in use. Used solution should be discarded and not returned to the container as this will cause contamination.**
For best results fresh solutions should be prepared prior to calibration.

3.5 Good Practice Guidelines

The types of electrodes are many and various. For the majority of tests carried out on aqueous solutions, with a reasonable ionic strength; at ambient temperatures and with limited use in strongly acidic or alkaline solutions, the standard glass or epoxy bodied combination electrode is ideal. For other applications a more suitable pH/reference electrode pair may be required; details or advice supplied on request.

The following general guidelines indicate the care and maintenance required for the three main groups of electrodes (Combination, Reference and pH). For more detailed advice on specific electrodes contact the electrode manufacturer.

1) **After use** — Rinse thoroughly with deionised water
   Short term storage — Immerse in pH 4 buffer (all types)
   Long term storage — Fit wetting cap filled with 3M KCl adjusted to pH 4.

2) Electrodes should be stored
   a) away from direct sunlight
   b) in a vertical position
   c) within their specified temperature range

3) Always ensure the electrode is used within its specified temperature range. Degradation of electrodes used above their specified temperature is rapid and irreversible.

4) Ensure the level of fill solution is above the internal elements in the electrode and that this level remains above the sample in use. Note: Some epoxy gel filled electrodes are not refillable.

5) **DO NOT** touch the sensitive glass pH membrane or reference junction during use. Excess droplets of solution may be removed by gently blotting with filter paper or tissue. **DO NOT** rub the electrode as this may induce an electrostatic charge.

6) Ensure no air bubbles are trapped at the bottom of the electrode. Removal of air bubbles is possible by holding the electrode vertically and gently tapping the electrode body. Larger bubbles may be removed by shaking the electrode in a downward direction.

7) During use ensure the electrode is rinsed in deionised water between each measurement to eliminate risk of contamination of solutions.

8) Ensure that the side port/inlet if present is uncovered, especially during a long run of tests.

9) For samples such as blood, serum or any measurements of Tris buffer solutions the junction may become badly clogged. For these measurements it is recommended that the Tris buffer electrode is used (924 030).

10) For applications associated with the measurement of food extracts, it is recommended that the Food electrode is used (924 051). This will reduce the risk of blockage from fat proteins, will be easy to clean and is perfect for measurements in agar media. This electrode is also recommended for measurement in any solution where deposits on the electrode are likely. The flat surface is easy to clean and robust.

11. For low ionic strength applications the Environmental electrode (924 050) is recommended.

3.6 Instrument Set-Up

The following section details the set-up modes available to the user.
These are: Number of calibration points entry, Buffer type entry, Manual buffer entry 1-3, Display resolution, Manual temperature, Temperature units and serial port Baud Rate. These can be set in sequence as detailed in this section or, by entering the SETUP mode and using the STO key to select a specific parameter at any time.

To exit the set up menus at any time press the ESC key. This will return the instrument to the MODE menu. Any parameters not saved will remain as defaults or previous setting.

3.6.1 Number of calibration points entry

I, 2 or 3 point calibration is possible on the 3510. To set these parameters:

Select SETUP mode on the display using the Left arrow key.

The secondary display will show CALPTS and will then scroll CALIBRATION POINTS after 10 seconds.

Select the required number of calibration points using the Up/Down arrow keys. The Left/Right arrow keys and the CAL/CLR key have no function during this set up.

Symbol ▲▼ will flash while adjustment is being made.

To accept the number of calibration points entered, press the STO key. The symbol will disappear and the secondary display will momentarily show SAVED and the next set up menu option will be displayed.

3.6.2 Buffer type entry

The display will show:

The secondary display will show BUFFER and will then scroll BUFFER TYPE after 10 seconds. Select the type of buffer from the options available by scrolling through the list using the Up/Down arrows – AUTO, MAN, JIS, NIST or DIN. (AUTO relates to the Jenway buffer types supplied with the instrument).

The Left/Right arrow keys and the CAL/CLR key have no function during this set up.

Symbol ⬍ will flash while adjustment is being made.

To accept the type of buffer selected, press the STO key. The symbol will disappear and the secondary display will momentarily show SAVED and the next set up menu option will be displayed.

If MANUAL buffer entry is selected the display will show SAVED and then the screen will update to show:

with the first digit of the value flashing. Adjustment of the flashing digit can be made using the Up/Down arrow keys. The Left/Right arrow keys are used to select the next adjusting digit which will flash when selected. Once the full reading has been adjusted to the correct value, press the STO key. If a 1 point calibration only is being performed the instrument display will update and show the pH Resolution set up menu.

If a 2 or 3 point calibration is being performed the display will move on to the 2 and then 3 point calibration buffer set up screens.

The correct values should be entered and saved as for the 1 point calibration. When all chosen buffer types have been entered and confirmed the instrument display will update to show the next set up menu option.

To exit the set up menus at any time press the ESC key. This will return the instrument to the MODE menu.

3.6.3 pH resolution

Note: Setting the pH resolution will affect the resolution on the main instrument display. Manual buffer entry is always shown to 3 decimal places.

The display will show:

The secondary display will show PH RES and will then scroll PH RESOLUTION after 10 seconds.

Select the preferred resolution from the options (0.001, 0.01 or 0.1) using the Up/Down arrows.

The Left/Right arrow keys and the CAL/CLR key have no function during this set up.

Symbol ▲▼ will flash while adjustment is being made.

To accept the selected resolution, press the STO key. The symbol will disappear and the secondary display will momentarily show SAVED and the next set up menu option will be displayed.

To exit the set up menus at any time press the ESC key. This will return the instrument to the MODE menu.

3.6.4 Temperature units

The display will show:

The secondary display will show UNITS and will then scroll TEMPERATURE UNITS after 10 seconds.

Select °C or °F using the Up/Down arrows.

The Left/Right arrow keys and the CAL/CLR key have no function during this set up.

Symbol ⬍ will flash while adjustment is being made.

To accept °C or °F, press the STO key. The symbol will disappear and the secondary display will momentarily show SAVED and the next set up menu option will be displayed.

To exit the set up menus press the ESC key at any time. This will return the instrument to the MODE menu.

3.6.5 Manual temperature

If the ATC probe is not connected to the instrument the display will show:

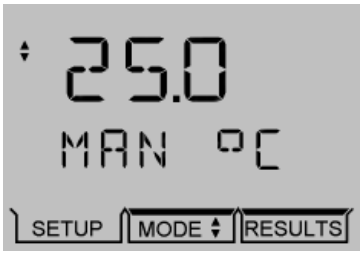

The secondary display will show MAN °C (or °F) and will then scroll MANUAL TEMPERATURE °C (or °F).

Measure the temperature of the buffer solutions(s) to be used and adjust the displayed reading to these values. Adjustment of the flashing digit can be made using the Up/Down arrow keys. The Left/Right arrow keys are used to select the next adjusting digit which will flash when selected. Once the reading has been adjusted to the correct value, press the STO key. The instrument display will update and show the Baud Rate set up menu.

Any changes to manual temperature settings reflect on 3.6.4.

To exit the set up menus press the ESC key at any time. This will return the instrument to the MODE menu.

3.6.6 Baud Rate

For full details relating to serial protocol refer to Section 6 of this manual.

The display will show:

The secondary display will show BAUD and will then scroll SERIAL PORT BAUD RATE after 10 seconds.

Select the required baud rate (9600 or 1200) using the Up/Down arrow keys. The data bits and parity will automatically adjust as the baud rate is selected.

The Left/Right arrow keys and the CAL/CLR key have no function during this set up.

Symbol ⬍ will flash while adjustment is being made.

To accept the selected baud rate, press the STO key. The symbol will disappear and the secondary display will momentarily show SAVED and the instrument will return to the Mode menu.

To exit the set up menus at any time press the ESC key. This will return the instrument to the MODE menu.

3.7 pH Calibration

3.7.1 Calibration with Manual Temperature Compensation

To exit the calibration sequence at any time press the ESC key. This will cancel the pH calibration and return the instrument to the MODE menu.

Note: Buffer solutions should be carefully prepared as per the manufacturers instructions. When using manual temperature compensation (no ATC probe fitted) the solution temperature should be measured and the value entered in the set up menu prior to calibrating the instrument (refer 3.6.5). The buffer solutions should all be at the same temperature.

1. Select the pH measuring mode using the Up/Down arrows which toggle between pH and mV modes. Press the CAL key.
The primary display will show the current pH reading. The main display annunciators will indicate CAL 1 and the buffer type being used.
The secondary display will show the manually set temperature reading in °C or °F. When manual temperature compensation is being used the annunciator will indicate MAN.
The status display will indicate the slope value.

2. CAL 1 Immerse the electrode(s) in the first buffer solution and allow the instrument to stabilise. When no pH change of less than 0.005pH is detected over a five second period the endpoint symbol will be displayed. Press the CAL or STO key.

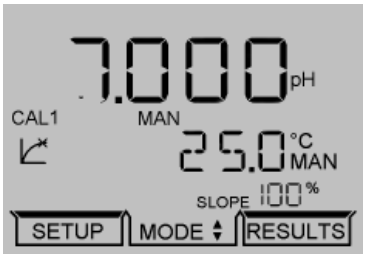

If a successful I point calibration has been performed the secondary display will momentarily show CAL OK. The instrument will then update the display. The display will then show the next part of the calibration sequence if a 2 and/or 3 point calibration has been selected. If a 1 point calibration only is required the instrument will return to the main measuring screen. Eo is shown on the status display

Rinse the electrode(s) in deionised water.

3. CAL 2 Immerse the electrode(s) in the second buffer solution and allow the instrument to stabilise. When no pH change of less than 0.005pH is detected over a five second period the endpoint symbol will be displayed. Press the CAL or STO key. The slope value is shown on the status display.

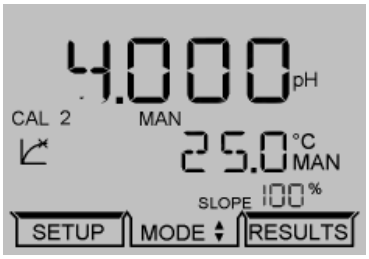

If a successful calibration has been performed the secondary display will momentarily show CAL OK. The instrument will then update the display. The display will then show the next part of the calibration sequence if a 3 point calibration has been selected. If a 2 point calibration only is required the instrument will return to the main measuring screen.

Rinse the electrode(s) in deionised water.

4. CAL 3 Immerse the electrode(s) in the third buffer solution and allow the instrument to stabilise. When no change in the least significant display digit is detected over a five second period the endpoint symbol will be displayed. Press the CAL or STO key.

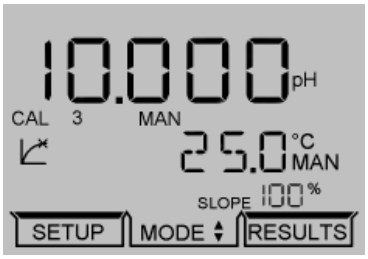

If a successful I point calibration has been performed the secondary display will momentarily show CAL OK. The instrument will then update the display.

Rinse the electrode(s) in deionised water.

Once a successful calibration has been completed the instrument will return to the measuring mode.

The instrument is then ready to undertake the measurement of unknown solutions. If the temperature of the unknown solution differs from the buffer, the Set up menu should be used to set the instrument display to the temperature of the unknown solution.

If the instrument fails a calibration the error message ERROR E) OUTSIDE LIMITS will scroll along the secondary display. (refer Section 3.8 for details of Error Codes).

3.7.2 Calibration with Automatic Temperature Compensation

To exit the calibration sequence at any time press the ESC key. This will cancel the pH calibration and return the instrument to the MODE menu.

Note: Buffer solutions should be carefully prepared as per the manufacturers instructions.

1. Select the pH measuring mode using the Up/Down arrows which toggle between pH and mV modes. Press the CAL key.
The primary display will show the current pH reading. The main display annunciators will indicate CAL 1 and the buffer type being used.
The secondary display will show the ATC temperature in °C or °F.
The status display will indicate the Eo or slope values.

2. CAL 1 Immerse the electrode(s) in the first buffer solution and allow the instrument to stabilise. When no change in the least significant display digit is detected over a five second period the endpoint symbol will be displayed. Press the CAL or STO key.

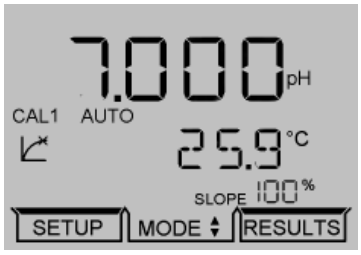

If a successful I point calibration has been performed the secondary display will momentarily show CAL OK. The instrument will then update the display. The display will then show the next part of the calibration sequence if a 2 and 3 point calibration has been selected. If a 1 point calibration only is required the instrument will display the Eo value on the status screen and then return to the main measuring screen.

Rinse the electrode(s) in deionised water.

3. CAL 2 Immerse the electrode(s) in the second buffer solution and allow the instrument to stabilise. When no change in the least significant display digit is detected over a five second period the endpoint symbol will be displayed. Press the CAL or STO key.

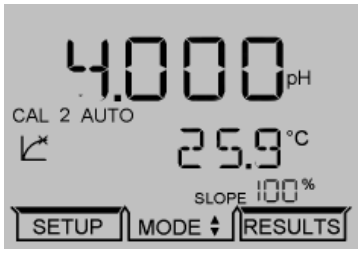

If a successful calibration has been performed the secondary display will momentarily show CAL OK. The instrument will then update the display. The display will then show the next part of the calibration sequence if a 3 point calibration has been selected. If a 2 point calibration only is required the instrument will return to the main measuring screen.

Rinse the electrode(s) in deionised water.

4. CAL 3 Immerse the electrode(s) in the third buffer solution and allow the instrument to stabilise. When no change in the least significant display digit is detected over a five second period the endpoint symbol will be displayed. Press the CAL or STO key.

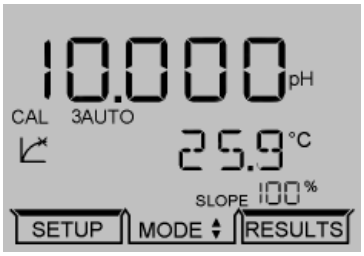

If a successful I point calibration has been performed the secondary display will momentarily show CAL OK. The slope value from the calibration will be displayed. The instrument will then update the display.

Rinse the electrode(s) in deionised water.

If the instrument fails a calibration the error message EO will be shown and ERROR SLOPE OUTSIDE LIMITS will scroll along the secondary display.

3.8 Error Codes

ERROR EO OUTSIDE LIMITS
This error message will be displayed when the mV value for a buffer is more or less than 30mV from the ideal Nernstian value.

ERROR SLOPE OUTSIDE LIMITS
This error message is displayed when the slope value is outside the range of 75 - 125%.

UNABLE TO RECOGNISE BUFFER
This error message will be displayed when the buffer value is more than 0.5 pH units from the set value.

3.9 Millivolt Mode

Absolute Millivolts

When this mode is selected the unit will display the actual voltage developed by the electrode when it is immersed in a solution containing ions to which the electrode is sensitive.
The electrode may be a combination type or a suitable sensing/reference pair, depending on the specific test being carried out.

pH, Redox and Ion Selective electrodes can all be used in this mode. Most of these determinations will require the preparation of calibration curves or other analytical methods to enable the mV reading to be converted to a concentration unit. For further information on these determinations refer to the electrode instructions, which will normally give details of calibration solutions, interferences and the limits of the methodology.

A very useful application of the Absolute mV range is for monitoring the performance of standard pH electrodes. Using accurate and fresh buffers at a constant temperature, the millivolt output of the electrode should be noted and compared to the theoretical ideal. As the electrode ages, becomes contaminated or dirty, these values will drift, indicating that corrective action should be taken.
Recording these values as part of a routine Quality Control program can give a good indication of the condition of the electrode.

Relative Millivolts

This mode is suitable for determinations using Redox and Ion Selective Electrodes and has the additional benefit of being able to zero any offset voltage developed by the electrode in a blank solution, i.e; a solution that has none of the ions to be measured, but has all the other characteristics of the unknown samples. A blank solution would normally have its ionic strength and pH adjusted as required for the electrode in use.
As the display is zeroed automatically when the Relative millivolt mode is selected, it is necessary to immerse the electrode in the blank solution with the Absolute mV mode selected. When the reading has stabilised the Relative mV mode should then be selected. The display will be set to zero, thereby removing any offset voltage.
Sample measurement is then carried out by using a variety of well tried analytical methods; from simple calibration curves through titrations, to single and multiple addition methods.

Select the mV mode using the Up/Down arrows which toggle between pH and mV modes.
The CAL/CLR key switches between Absolute and Relative mV. Relative mV is indicated by REL on the display.

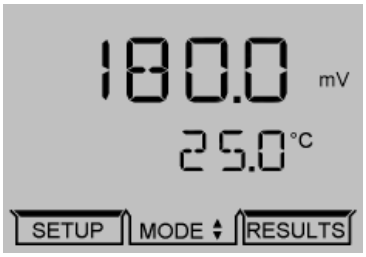

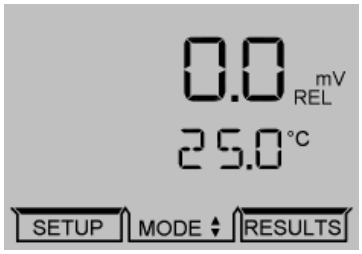

3.10 Performing Measurements

To perform measurements in pH, mV or temperature modes the following should be carried out:

1. **mV Measurement**
   a) Connect the electrode to the unit via the BNC socket on the rear panel. If a separate reference electrode is to be used, this should be connected to the **Ref** socket.
   b) Select **mV** mode using the Up/Down arrows. The display will show the electrode output directly in mV.

2. **Temperature Measurement (using ATC)**
   a) Connect the ATC probe to the unit via the **Temp** socket on the rear panel.
   b) Select **°C** or **°F** via the Set up menu.
   The secondary display will show ATC probe temperature directly in °C or °F.

3. **Temperature Measurement (Manual)**
   a) If Manual temperature compensation is being used, the preferred measurement range should be selected via the Set Up menu.
   b) Immerse the electrode into the solution and set the to the solution temperature via the Set Up menu.

4. **pH Measurement**
   a) Perform a calibration sequence using manual or automatic temperature compensation.
   b) Immerse the electrode(s) into the solution to be measured and note the results once the reading has stabilised.

NOTE: Ensure the pH/Reference probe combination are compatible with the samples being measured. Non-compatibility may be indicated by drifting readings, noise or shortened electrode life. During use the electrode must be rinsed between each measurement to eliminate contamination of solutions. Excess droplets of solution may be removed by gently blotting with filter paper or tissue.
For further details refer to Section 3.5-Good Practice Guidelines.

3.11 Results storage and display

To store the current displayed result press the STO key. The instrument display will momentarily show STORED on the secondary display. The memory location will be given on the status display.

Up to 32 results can be stored. Each result will be stored in the next available memory location.

The instrument will store:
- Primary pH or mV readings
- Temperature readings and the unit of measurement (°C or °F)
- MAN if manual temperature measurement is used
- Endpoint symbol
- REL if relative mV is selected

Selecting the RESULTS menu displays the reading stored at the displayed memory location.

The Up arrow increments the memory index, the Down arrow decrements the memory index.

The Left arrow exits to the main measurement display.

The Right arrow and STO keys do not function.

CAL/CLR deletes the current memory location. The secondary display scrolls DELETED.

Holding the CAL/CLR key until after DELETED is displayed on the screen will delete all readings. The secondary display will then scroll ALL RECORDS DELETED.

If no readings have been stored, the secondary display will show EMPTY.

To exit this mode press the ESC key.

If the memory is full the secondary display will show FULL.

Section 4

Maintenance

4.1 General

The Model 3510 is designed to give optimum performance with minimum maintenance. It is only necessary to keep the external surfaces clean and free from dust. To give added protection when not in use the unit should be switched off and covered with the optional dust cover (060 406).

4.2 Cleaning/Re-conditioning of Combination Electrodes

For general purpose use, combination electrodes can be cleaned with a mild detergent solution or a commercial glass cleaning solution (provided these are not strongly acidic). The electrode surface should be wiped with a clean cloth soaked in the cleaning agent, and/or allow the membrane to stand in the solution until clean. Rinse and repeat as necessary. Electrodes which have been allowed to dry out should be soaked overnight in warm distilled water.

Table of Cleaning Agents for Glass Electrodes

Deposit	Cleaning Agent
General deposits	Genklene or mild detergent solution
Inorganic coatings	Commercial glass cleaning solution (not strongly acidic)
Metal compounds	Acid solution, not stronger than 1M
Oil/Grease	Complexing agent (EDTA) or suitable solvent
Resins/Lignins	Acetone, alcohol or detergent (not strongly acidic)
Proteins (blood, etc)	Enzyme solutions (e.g; pepsin in 0.1M HCl)
Stubborn deposits	Hydrogen peroxide, sodium hypochlorite or domestic bleach

Note: Solvents such as carbon tetrachloride, trichloroethylene, petroleum, ether, etc, MUST NOT be used for cleaning electrodes that have a plastic body or a plastic protective skirt.

Section 5

Optional Accessories

The following list of items are available as optional accessories for use with the Model 3510:

060 406	Dust cover
037 701	Printer supplied with roll of thermal paper, serial connection lead, power supply, power connection lead (UK) and pouch
037 801	Interface cable kit
050 501	DataWay PC Software - includes CD-ROM, interface cable and instructions
037 551	RS232 to USB converter for use with computers without a serial port

pH electrodes

924 001	General purpose, epoxy bodied combination, 12mm diameter. For liquids.
924 005	General purpose, glass bodied combination, 12mm diameter. For liquids.

For a complete listing of all available electrodes please contact your local distributor.

Buffer Solutions

025 163	2.00 pH buffer (500ml)
025 037	4.00 pH buffer (500ml)
025 038	7.00 pH buffer (500ml)
025 162	9.22 pH buffer (500ml)
025 039	10.05 pH buffer (500ml)
025 179	pH 4 buffer sachets (pack of 10)
025 180	pH 7 buffer sachets (pack of 10)
025 181	pH 10 buffer sachets (pack of 10)

Redox Standards

025 157	200mV @ 25°C (500ml)
025 158	300mV @ 25°C (500ml)
025 159	465mV @ 25°C (500ml)

Miscellaneous

025 160	3M KCl Electrode Fill Solution (100ml)
025 161	Electrode Cleaning Solution (500ml)

5.2 Spares

924 005	pH combination electrode (glass bodied)
027 500	ATC probe
009 146	BNC shorting plug
037 702	Paper roll, thermal
021 030	UK 230V power supply
021 031	European 230V power supply
021 032	US 115V power supply
021 033	230V leaded power supply

SECTION 6

Interfacing

6.1 Analogue

All units are provided with 2 x 4mm sockets, marked as ANALOG OUT, on the rear panel. An analogue output voltage of 1mV per least significant digit is available from these sockets. Recorder output ±2000mV, proportional to displayed reading:

1mV per 0.01pH (pH measurement and calibration modes)
1mV per 1mV (mV measurement mode)

6.2 RS232

The Bi-directional RS232 interface is available on the rear panel 9 way D type connector.
The connections are as follows:

DCD 1	- LINKED TO DTR AND DSR
RXD 2	- INPUT TO 3510
TXD 3	- OUTPUT FROM 3510
DTR 4	- LINKED TO DCD AND DSR
GND 5	
DSR 6	- LINKED TO DCD AND DTR
RTS 7	- OUTPUT FROM 3510
CTS 8	- INPUT TO 3510

Suggested interconnections are detailed below:

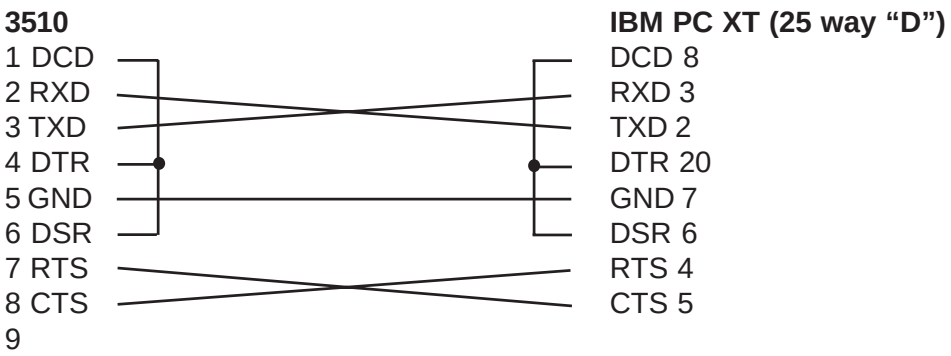

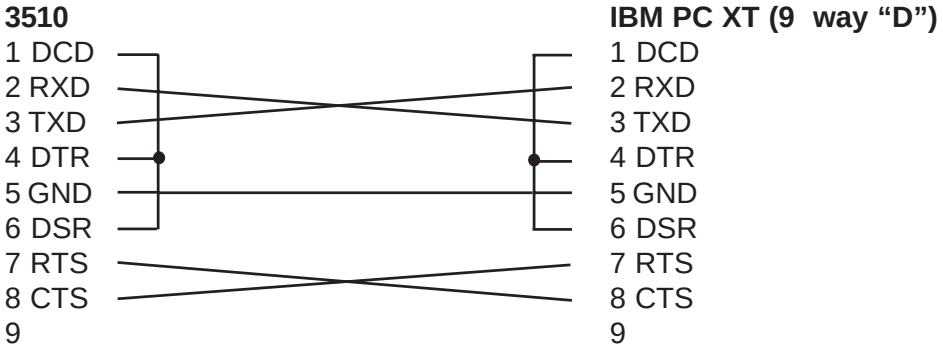

NOTE: Interface Cable (Order Code: 013 203) is required.

Interfacing (continued)

The RS232 communications parameters on the computer or printer need to be set to match those of the Model 3510, as detailed below:

1200 Baud		9600 Baud
7 Data Bits		8 data bits
Odd Parity	OR	No parity
1 Stop Bit		1 stop bit

Setting of these options is detailed in Section 3.6.6.

The Model 3510 supports both hardware (CTS/RTS) flow control and software XON/XOFF flow control.

Pressing the PRINT key outputs from the RS232 interface.

Sending an ASCII “D” to the 3510 causes a printout of the current displayed reading plus sample number.

Sending an ASCII “C” causes a printout of the last calibration parameters.

Sending an ASCII "P" causes a printout of the stored readings.

6.3 Keypad Emulation

Keypad remote control using RS232 interface:

7	- Instrument On / Standby / Escape
1	- Calibrate / Memory Clear
9	- Print
8	- Up Arrow
2	- Down Arrow
4	- Left Arrow
6	- Right Arrow
3 or 5	- Enter / Store

6.4 Printing

A 32 column serial printer (037 701) is available for use with the Model 3510.

Connect the printer via the cable supplied with the printer to the 9 way socket located on the rear panel of the instrument.

To intiate a print out of data press the print key.

When the first print is performed a header section will be printed showing:

Instrument name
Spacing for entry of Operator & User ID
Most recent calibration information
Eo value
Slope efficiency
Buffer type

This will be followed by results data in either pH or mV dependent on mode selected. Details will also be given on temperature.

An asterisk (*) indicates that manual temperature compensation is being used.

A reading in the Relative mV mode will be indicated by an R.

Each reading will be numbered sequentially.

A calibration will reset the data number to 0001 and the header information will be re-printed.

To obtain a print out of stored readings, enter the RESULTS MODE and press the print key. A print out of all 32 print locations will then be generated.

6.4.1 Example Printout

3510 Header printout

```
================================
3510 Version P.9

Operator.......................

User ID........................
Cal1     7.01pH *25.0'C    8.5mV
Eo = 8.8mV
Slope Efficiency = 101.4%
Buffer Recognition: Auto

================================
0001     7.00pH *   25.0'C
0002     7.02pH *   25.0'C
0003     7.02pH *   25.0'C
0004     7.02pH *   25.0'C
0005     7.02pH *   25.0'C
0006     7.02pH *   25.0'C
0007     7.02pH *   25.0'C
0008     7.02pH *   25.0'C
0009     7.02pH *   25.0'C
0010     7.02pH *   25.0'C
0011 *   7.02pH *   25.0'C
0012 *   7.02pH *   25.0'C
0013 *   7.00pH     23.7'C
0014 *   7.00pH     23.6'C
0015 *   7.00pH     23.6'C
0016 *   7.00pH     23.5'C
0017 *   7.00pH     23.5'C
0018 *   7.00pH     23.4'C
0019 *   7.00pH     23.4'C
0020 *   7.00pH     23.3'C
```

3510 Results printout

```
================================
3510 Stored Results
================================
0001    7.841pH *   25.0'C
0002    7.841pH *   25.0'C
0003 -> No Record <-
0004 -> No Record <-
0005 -> No Record <-
0006 *   7.01pH     22.8'C
0007 *   7.01pH     22.8'C
0008 *   7.01pH     22.8'C
0009 -> No Record <-
0010 -> No Record <-
0011 -> No Record <-
0012 -> No Record <-
0013 -> No Record <-
0014 -> No Record <-
0015 -> No Record <-
0016 -> No Record <-
0017 -> No Record <-
0018 -> No Record <-
0019 -> No Record <-
0020 -> No Record <-
0021 -> No Record <-
0022 -> No Record <-
0023 -> No Record <-
0024 -> No Record <-
0025 -> No Record <-
0026 -> No Record <-
0027 -> No Record <-
0028 -> No Record <-
0029 -> No Record <-
0030 -> No Record <-
0031 -> No Record <-
0032 -> No Record <-
================================
```

Section 7

Troubleshootiing and functional checks

7.1 Troubleshooting

Fault	Possible Cause	Action
No display	Check power supply	Check that correct 9V ac power supply is connected and switched on.
Erratic display	Check power supply	Unit must be used with supplied 9V acpower supply. Usage of other units will cause the 3510 not to operate.
Drifting erratic readings	Electrode fault	Use BNC cap to test 3510 (see 7.2) Replace electrode.
Cannot calibrate	Electrode Fault	Use BNC cap to test 3510 (see 7.2) Replace electrode.
ERROR EO ... ERROR SLOPE	Buffer problem Electrode problem	Use freshly prepared buffers. Use BNC cap to test 3510 (see 7.2) Replace electrode.
Unable to recognise buffers	Using correct buffer set	Is the buffer type correct? Use AUTO for Jenway supplied buffers. Replace buffers Use BNC cap to test 3510 (see 7.2) Replace electrode.
Temperature readings fluctuating	Temp probe faulty	Check 3510 using section 7.2 Replace temperature probe.
Temperature readings incorrect	Temp probe faulty	Check 3510 using section 7.2 Replace temperature probe.
	Manual temp not set	Set meter to read °C and set temperature against a calibrated thermometer.
Will not print	Connection	3510 requires the RS232 cable to connect the printer.
	Paper out	The feed light on the printer will flash if the unit requires paper.
	Battery flat	Connect ac power supply.

If the above does not answer your query try the FAQ section on the www.Jenway.com Website.

7.2 Functional check

The measurement function of the meter can be checked using the enclosed BNC shorting cap (009 146).

1) Remove the ATC probe if connected.
2) Set Manual temperature compensation to 25°C.
3) Remove pH probe and replace with BNC shorting cap.
4) Select mV mode the display should read ±1.

If the mV reading is greater than ±1mV perform a reset (refer Section 7.3).

To make measurements from this point refit the ATC probe and pH probe and calibrate the 3510 using fresh buffer solutions (see section 3.6).

Temperature input check.

Remove the temperature probe and apply a 10Kohm resistor across the pins of the temp input as described in fig 7.2.1

Fig 7.2.1 Temperature input with connection detail

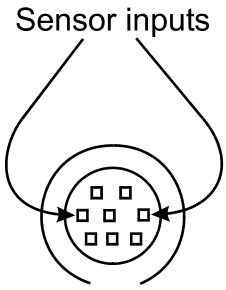

7.3 Reset Procedure

NOTE: Performing a reset will return all options to the default values. It will not delete stored data.

1. Remove AC power connector from the rear panel socket.

2. Press and hold the STO key.

3. Replace the AC power connector into the rear panel socket. The secondary display will momentarily show E2 RST.

4. If this does not resolve the problem please contact the manufacturer or your local distributor.

EC Declaration of Conformity

Jenway Model 3510 pH/mV/Temperature Meter complies with the following European Standards:

EN 50081-1:1992 Electromagnetic compatibility – Generic emission standard.

EN 50082-1:1992 Electromagnetic compatibility – Generic immunity standard.

EN 61010-1:2001 Safety requirements for electrical equipment for measurement, control and laboratory use.

Following the provision of:

EMC Directive – 89/336/EEC and Low Voltage Directive – 73/23/EEC

Carl Warren
General Manager, Jenway
Gransmore Green, Felsted, Dunmow,
Essex, CM6 3LB, England