Grant-bio

Densitometer
DEN-1B

Operating instructions

Contents

1 **Safety** 4

2 **General Information** 6

3 **Getting started** 8

4 **Operation of DEN-1B** 10

5 **Maintenance** 12

6 **Specifications** 13

7 **Guarantee and service** 14

1. Safety

The following symbol means:

Caution: Read this operating instructions fully before use and pay particular attention to sections containing this symbol.

GENERAL SAFETY

- Operation of the unit must be carried out according to the given operating instructions.
- The unit should be saved from shocks and falling.
- After transport or storage dry out the unit (2-3 hrs) before connecting it to the supply voltage.
- Before using any cleaning or decontamination method except those recommended by the manufacturer, user should check with the manufacturer that the proposed method will not damage the equipment.
- Do not make modifications in design of the unit.

ELECTRICAL SAFETY

- Connect only to a power supply with a voltage corresponding to that on the serial number label.
- Only use the external power supply unit provided with this product.
- Ensure that the power switch and external power supply connector are easily accessible during use.
- Before moving, disconnect from the mains.
- To turn off the unit, disconnect the external power supply from the mains outlet.
- If liquid is spilt inside the unit, disconnect it from the external power supply and have it checked by a competent person.
- **Batteries**

  Use alkaline (preferred) or rechargeable AA type batteries.

  ATTENTION DANGER, risk of explosion and burns:

  - The batteries must be inserted correctly with respect to polarity by following the diagram in the battery case.
  - If one battery is reversed (two + poles or two - poles in contact with each other), a chemical reaction is produced in minutes that releases explosive gasses and extremely corrosive liquid.

- In case of doubt, turn off the unit immediately and check the polarity.
- Protect your eyes in case leakage has already occurred. Cover the battery case with a rag before opening it to avoid contact with any discharge.
- In case of contact with liquid from the batteries, rinse affected area immediately with clear water and get immediate medical attention.
- Do not mix brands of batteries.
- Do not mix new and used batteries.
- Remove the batteries from the unit for prolonged storage.
- Do not recharge alkaline batteries.
- Do not short-circuit the batteries as this can cause burns.
- Do not attempt to open or dismantle batteries.
- Do not put used batteries in a fire.
- Keep batteries out of reach of children.
- Keep water out of the battery case.
- Follow the disposal instructions and properly dispose of the used battery.

DURING OPERATION

☞ Do not operate the unit in environments with aggressive or explosive chemical mixtures.

☞ Do not operate the unit if it is faulty or been incorrectly installed.

☞ For indoor use only.

☞ Do not use outside laboratory rooms.

⚠ Buttons **Select** and **Install** are used only for calibration of the unit according to p. 3.4. Do not press the buttons in other cases, otherwise it can cause calibration reset and recalibration will be needed.

☞ BIOLOGICAL SAFETY

It is the user's responsibility to carry out appropriate decontamination if hazardous material is spilt on or inside the equipment.

2. General Information

Densitometer DEN-1B is designed for measurement of cell suspension's turbidity in the range 0.0 - 6.0 McFarland units (0 cells/ml - 180x107 cells/ml). DEN-1B provides the opportunity to measure solution turbidity in a wider range (6.0 - 15.0 McFarland units) however, it is necessary to remember that in this case the standard deviation values increase.

Densitometer DEN-1B is used for:

① Determining concentration of cells (bacterial, yeast cells) in the fermentation process;

② Detection of susceptibility of microorganisms against antibiotics;

③ Identification of microorganisms with various test-systems;

④ Measuring optical density at fixed wavelength;

⑤ Quantitative evaluation of concentration of dyed solutions that absorb green light.

The operation principle is based on measurement of optical density with digital presentation of the results in McFarland units.

The unit is calibrated at the factory and keeps calibration without power supply. However, if necessary it is possible to calibrate the unit by 2 - 8 points in 0.0 - 6.0 McFarland unit range. Both commercial standards (e.g. produced by BioMerieux, Lachema, etc.) and the cell suspensions prepared in the laboratory can be used for calibration.

Table 1. Interpretation of McFarland Standard results into corresponding numeric values of bacterial suspension concentration and their optical density at 550 nm.

McFarland Standard	Composition	Interpretation	
	Concentration $BaSO_4$	Bacterial concentration*	Theoretical optical density at 550 nm**
0.5	2.40 10^{-5} mol/l	150 x 10^6 cells/ml	0.125
1	4.80 10^{-5} mol/l	300 x 10^6 cells/ml	0.25
2	9.60 10^{-5} mol/l	600 x 10^6 cells/ml	0.50
3	1.44 10^{-4} mol/l	900 x 10^6 cells/ml	0.75
4	1.92 10^{-4} mol/l	1200 x 10^6 cells/ml	1.00
5	2.40 10^{-4} mol/l	1500 x 10^6 cells/ml	1.25

* Bacterial concentration depends on microorganism size. The numbers represent an average value valid for bacteria. For yeasts, which are larger in size, these numbers should be divided by about 30.

** Values correspond to optical densities of bacterial suspensions. The $BaSO_4$ solutions do not have the same optical density, because size and particle forms differ from those of bacteria and light is diffracted differently.

3. Getting started

3.1 Unpacking

Remove packing materials carefully and retain for future shipment or storage of the unit.

3.2 The DEN-1B set includes:

Densitometer DEN-1B .....1 piece
Adapter D16 for tubes with external diameter 16 mm .....1 piece
External power supply .....1 piece
AA type battery .....3 pieces
Operating Manual; Declaration of Conformity .....1 copy

3.3 Set up:

- Place the unit on the horizontal even working surface;
- Battery set up:
  - Insert a sharp pin into the small socket according to the fig.1/❶ on the underside and open the battery compartment.
  - Insert the batteries inside matching correctly +/- poles.
- Alternatively connect the external power supply unit to the socket (fig.2/❷) on the rear side of the unit.

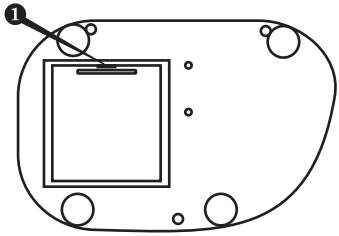

Fig.1 Bottom scheme

3.4 Calibration

The instrument is pre-calibrated at the factory for operation with the glass tubes external diam. 18 or 16 mm (see the label on the bottom side of the unit) at temperature range from +15°C to +25°C and keeps calibration without power supply.

Note! For work with other type tubes (e.g. with different outer diameter, bottom shape or different material [transparent plastic tubes]) it is necessary to perform calibration in the specified tubes.

Perform calibration in the following sequence from the lower calibration value to the higher values: 0.0, 0.5, 1.0, 2.0, 3.0, 4.0, 5.0, 6.0. The minimum requirement is to calibrate 2 points.

Attention! Ensure that the tube socket is empty!

3.4.1. If external power supply is used, connect it to the mains.

3.4.2. Switch ON the unit with the **Power** switch (Fig.2/❶) on the rear panel (position I).

3.4.3. With a pin press **Select** button (fig.2/❸) on the backside of the unit (for **Select** and **Install** buttons use thin pin, not more than 2 mm diameter). The display indicates flashing figure "- - -" the unit is ready to save calibration value of the first point - empty socket.

3.4.4. With a pin press **Install** button (fig.2/ ❹), “Empty socket” point is saved in the memory and the next calibration value is displayed (flashing figure "0.0”).

Note! Shake the tube with the corresponding standard, if necessary (it is recommended to use vortex, e.g. Vortexer PV-1, for shaking).

3.4.5. Insert the tube with the calibration value corresponding standard into the socket (fig.3/❶) of Densitometer.

3.4.6. With a pin press **Install** button. This point of calibration sequence is saved in the memory and the next calibration value is displayed.

Note! It is recommended to calibrate 0 value and as many points as possible to obtain precise results. The minimum requirement is to calibrate 2 points closest to working range (e.g. 0 and 6.0 for operation in 0 - 6.0 McF unit range).

3.4.7. Repeat steps 3.4.5.-3.4.6. until the calibration is complete (1-7 times, i.e. as many times as many points the chosen calibration sequence has).

3.4.8. If a standard is not available, press **Select** button for the next calibration value to be displayed.

3.4.9. After installing the last standard value “6.0”, or skipping it (**Select** button), the unit enters operation mode. The unit is ready for operation.

Note! If during calibration pressing of **Install** button does not cause switch to the next Standard value, it means that the inserted in the densitometer socket Standard has lower turbidity value than the previous Standard. Cause: turbidity of the inserted Standard does not correspond to the necessary value (Standard has to be shaken or replaced).

3.4.10. At the end of calibration switch OFF the unit with the **Power** switch (position O). If external power supply is used, disconnect the external power supply from the mains.

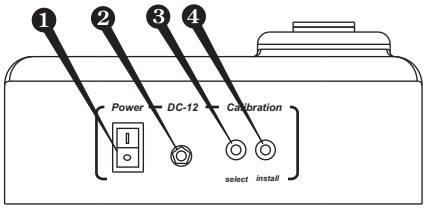

Fig.2 Rear panel

4. Operation of DEN-1B

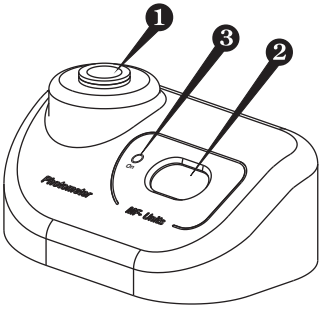

Fig.3 General view

Recommendations during operation

- Remove the tube with measured solution before connecting or disconnecting the external power supply during operation.
- It is recommended to start operation after approximately 15 min (the time necessary for stabilisation in the working mode).
- Using a tube with a flat bottom, the fluid should exceed the 7 mm level from the tube bottom, using a round-bottom tubes - 12 mm level from the tube bottom.
- The display goes off, if no tube is inserted in the socket during one minute. Press On key (fig.3/❸) to activate the unit.

4.1 If external power supply is used, connect it to the mains socket.

4.2 Switch ON the unit with the Power switch (Fig.2/ ❶) on the rear panel.

4.3 The following indication will be shown on the display (fig.3/❷):

“0.00” - the unit is calibrated and ready for operation (if no any tube inserted);

“CC”(flashing) - the unit is not calibrated - calibrate the unit.

“LOW BATTERY” - change the batteries following the Batteries instructions in p. 1. Safety precautions.

4.4 Shake the tube with the solution (it is recommended to use vortex for shaking, e.g. Vortexer PV-1) and insert into the socket (fig.3/❶). The McFarland value for the solution will be shown on the display (fig.3/❷).

4.5 Glass and transparent plastic tubes (external diameter 16 mm and 18 mm) can be used for work with Densitometer. An adapter D16 must be used for work with tubes which have external diameter 16 mm.

Note! The unit must be calibrated each time a tube type is changed (e.g. with different outer diameter, bottom shape or different material [transparent plastic tubes]).

4.6 At the end of operation switch OFF the unit with the Power switch. If external power supply is used, disconnect it from the mains socket.

5. Maintenance

Cleaning

The cases can be cleaned with a damp cloth after disconnection. Do not use solvents. Before using any decontamination or cleaning method except that recommended, check with our Service Department, or in other countries with our distributor, that the proposed method will not damage the equipment.

6. Specifications

The product is designed for operation indoors in a laboratory at altitudes up to 2000m, with ambient temperature from +4°C to +40°C and maximum relative humidity 80% for temperatures up to 31°C decreasing linear ly to 50% relative humidity at 40°C.

- Light source .....LED
- Wavelength .....λ = 565 ±15 nm
- McFarland unit range .....0.0 - 15.0
- Accuracy, of the full scale.....± 3%
- Display resolution ..... 0.01 McF
- Measurement time .....1 sec
- Recommended external diameter of tube .....18 mm
  16 mm (when using D16 adapter)
- Sample volume.....not less than 2 ml
- Display .....LCD
- Input current/power consumption .....12V, 7 mA / 0.1 W
- External power supply..... input AC 100-240 V 50/60Hz, output DC 12V
- Battery .....3 x accumulator AA type
- Dimensions .....165x115x75 mm
- Weight with power supply, not more .....0,9 kg

Replacement part	Description
D16	Adapter for tubes with external diameter 16 mm

Grant is committed to a continuous programme of improvement, specifications may be changed without notice.

7. Guarantee and Service

7.1 Guarantee

When used in laboratory conditions and according to these working instructions, this product is guaranteed for TWO YEARS against faulty materials or workmanship.

7.2 Service

For service, return for repair to our Service Department in the UK or, in other countries, to our distributor.

Declaration of Conformity

Manufacturer:	BIOSAN LTD. Ratsupites 7, build.2, Riga, LV-1067, Latvia
Equipment name/type number:	DEN-1B
Description of Equipment:	Densitometer
Directives:	EMC Directive 2004/108/EC Low Voltage Directive 2006/95/EC

Applied Standards	
Harmonized Standards:	EN61326-1:2006 Electrical equipment for measurement, control and laboratory use EMC requirements Part 1: General requirements EN 61010: Safety requirements for electrical equipment for measurement, control and laboratory use. Part 1: General requirements

I declare that this apparatus conforms to the requirements of the above Directive(s)

Dated 27. 10. 2010

Svetlana Bankovska
Executive Director
Biosan Ltd.

Grant-bio

Grant Instruments
(Cambridge) Ltd
Shepreth
Cambridgeshire
SG8 6GB
UK
Tel: +44 (0) 1763 260811
Fax: +44 (0) 1763 262410
Email: labsales@grantinstruments.com
www.grantinstruments.com

Densitometer/DEN-1B/30082/1.01