Thank you for purchasing this Esco Biological Safety Cabinet. Please read this manual thoroughly to familiarize yourself with the many unique features and exciting innovations we have built into your new equipment. Esco provides many other resources at our website, www.escoglobal.com, to complement this manual and help you enjoy many years of productive and safe use of your Esco products.

User and Service Manual

Ascent•MAX®

Ductless Fume Hood

For Technical Service, contact
North America
Esco Technologies, Inc.
2940 Turnpike Drive, Units 15-16 •Hatboro, PA 19040, USA
Toll-Free USA and Canada 888-375-ESCO
Tel 215-441-9661 • Fax 215-441-9660
us.escoglobal.com • usa@escoglobal.com

Rest of World
Esco Micro Pte. Ltd.
21 Changi South Street 1 • Singapore 486 777
Tel +65 6542 0833 • Fax +65 6542 6920
www.escoglobal.com • mail@escoglobal.com

Esco ADC-B/C/D/E User & Service Manual
Version A1 - Released January 2011

Copyright Information

"Material in this manual is provided for informational purposes only. The contents and the product described in this manual (including any appendix, addendum, attachment or inclusion), are subject to change without notice. Esco makes no representations or warranties as to the accuracy of the information contained in this manual. In no event shall Esco be held liable for any damages, direct or consequential, arising out of or related to the use of this manual."

Table of Contents

INTRODUCTORY PAGES

USER SECTION

SERVICE SECTION

Warranty Terms and Conditions

Esco warrants that the product described in this manual will perform according to specifications for a period of 60 months from the date of purchase.

Esco's limited warranty covers defects in materials and workmanship. During the warranty period, Esco's liability shall be, at our option, to repair or replace any defective parts of the product, provided if proven to the satisfaction of Esco that these parts were defective at the time of being sold, and that all defective parts shall be returned, properly identified with a Return Authorization.

This limited warranty covers parts ONLY and not transportation / insurance charges.

This limited warranty does not cover:

- Freight or installation (inside delivery handling) damage. If your product was damaged in transit, you must file a claim directly with the freight carrier
- Products with missing or defaced serial numbers
- Products for which Esco has not received payment
- Problems that result from:
    - External causes such as accident, abuse, misuse, problems with electrical power, improper operating environmental conditions
    - Servicing not authorized by Esco
    - Usage that is not in accordance with product instructions
    - Failure to follow the product instructions
    - Failure to perform preventive maintenance
    - Problems caused by using accessories, parts, or components not supplied by Esco
    - Damage by fire, floods, or acts of God
    - Customer modifications to the product

Factory installed, customer specified equipment or accessories are warranted only to the extent guaranteed by the original manufacturer. The customer agrees that in relation to these products purchased through Esco, our limited warranty shall not apply and the original manufacturer's warranty shall be the sole warranty in respect of these products. The customer shall utilize that warranty for the support of such products and in any event not look to Esco for such warranty support.

Esco encourages user to register product online at www.escoglobal.com/warranty or complete the warranty registration form included with each product.

ALL EXPRESS AND IMPLIED WARRANTIES FOR THE PRODUCT, INCLUDING BUT NOT LIMITED TO ANY IMPLIED WARRANTIES AND CONDITIONS OF MERCHANTABILITY AND FITNESS FOR A PARTICULAR PURPOSE ARE LIMITED IN TIME TO THE TERM OF THIS LIMITED WARRANTY. NO WARRANTIES, WHETHER EXPRESS OR IMPLIED, WILL APPLY AFTER THE LIMITED WARRANTY PERIOD HAS EXPIRED. ESCO DOES NOT ACCEPT LIABILITY BEYOND THE REMEDIES PROVIDED FOR IN THIS LIMITED WARRANTY OR FOR SPECIAL, INDIRECT, CONSEQUENTIAL OR INCIDENTAL DAMAGES, INCLUDING, WITHOUT LIMITATION, ANY LIABILITY FOR THIRD-PARTY CLAIMS AGAINST YOU FOR DAMAGES, FOR PRODUCTS NOT BEING AVAILABLE FOR USE, OR FOR LOST WORK. ESCO'S LIABILITY WILL BE NO MORE THAN THE AMOUNT YOU PAID FOR THE PRODUCT THAT IS THE SUBJECT OF A CLAIM. THIS IS THE MAXIMUM AMOUNT FOR WHICH ESCO IS RESPONSIBLE.

These Terms and Conditions shall be governed by and construed in accordance with the laws of Singapore and shall be subject to the exclusive jurisdiction of the courts of Singapore.

Technical Support, Warranty Service Contacts
Toll-Free USA and Canada 877-479-3726
Singapore: +65 6542 0833
Global Email Helpdesk: support@escoglobal.com

Visit http://www.escoglobal.com/ to talk to a Live Support Representative
Distributors are encouraged to visit the Distributor Intranet for self-help materials.

Policy updated on 30th Jan 2007 *(This limited warranty policy does not apply to products purchased before 30th Jan 2007).*

Introduction

1.Products Covered

Esco Ductless Fume Hood – Ascent Max (ADC Series)					
Electrical Rating	0.6 meters 2 feet	0.9 meters 3 feet	1.2 meters 4 feet	1.5 meters 5 feet	1.8 meters 6 feet
220-240 V AC, 50Hz, 1Φ	ADC-2B1	ADC-3B1 ADC-3C1 ADC-3D1 ADC-3E1	ADC-4B1 ADC-4C1 ADC-4D1 ADC-4E1	ADC-5B1 ADC-5C1 ADC-5D1 ADC-5E1	ADC-6B1 ADC-6C1 ADC-6D1
110-120 V AC, 50Hz, 1Φ	ADC-2B2	ADC-3B2 ADC-3C2 ADC-3D2 ADC-3E2	ADC-4B2 ADC-4C2 ADC-4D2 ADC-4E2	ADC-5B2 ADC-5C2 ADC-5D2 ADC-5E2	ADC-6B2 ADC-6C2 ADC-6D2
220-240 V AC, 60Hz, 1Φ	ADC-2B3	ADC-3B3 ADC-3C3 ADC-3D3 ADC-3E3	ADC-4B3 ADC-4C3 ADC-4D3 ADC-4E3	ADC-5B3 ADC-5C3 ADC-5D3 ADC-5E3	ADC-6B3 ADC-6C3 ADC-6D3

2. Safety Warning

- Anyone working with, on or around this equipment should read this manual. Failure to read, understand and follow the instructions given in this documentation may result in damage to the unit, injury to operating personnel, and / or poor equipment performance.
- Any internal adjustment, modification or maintenance to this equipment must be undertaken by qualified service personnel.
- The use of any hazardous materials in this equipment must be monitored by an industrial hygienist, safety officer or some other suitably qualified individual.
- Before you process, you should thoroughly understand the installation procedures and take note of the environmental / electrical requirements.
- In this manual, important safety related points will be marked with the symbol. ⚠
- If the equipment is used in a manner not specified by this manual, the protection provided by this equipment may be impaired.

3. Limitation of Liability

The disposal and / or emission of substances used in connection with this equipment may be governed by various local regulations. Familiarization and compliance with any such regulations are the sole responsibility of the users. Esco's liability is limited with respect to user compliance with such regulations.

4. European Union Directive on WEEE and RoHS

The European Union has issued two directives:

• **Directive 2002/96/EC on Waste Electrical and Electronic Equipment (WEEE)**

This product is required to comply with the European Union's Waste Electrical & Electronic Equipment (WEEE) Directive 2002/96/EC. It is marked with the following symbol:

Esco sells products through distributors throughout Europe. Contact your local Esco distributor for recycling/disposal.

• **Directive 2002/95/EC on Restriction on the use of Hazardous Substances (RoHS)**

With respect to the directive on RoHS, please note that this hood falls under category 8 (medical devices) and category 9 (monitoring and control instruments) and is therefore exempted from requirement to comply with the provisions of this directive.

Declaration of Conformation

In accordance to EN ISO/IEC 17050-1:2004

We, Esco Micro Pte.Ltd.
of 21 Changi South Street 1
Singapore, 486777
Tel: +65 6542 0833
Fax: +65 6542 6920

declare on our sole responsibility that the product:

Category : Ductless Fume Hoods
Brand : Ascent Max
Model : ADC-2B1, ADC-3B1, ADC-4B1, ADC-5B1, ADC-6B1
ADC-3C1, ADC-4C1, ADC-5C1, ADC-6C1
ADC-3D1, ADC-4D1, ADC-5D1, ADC-6D1
ADC-3E1, ADC-4E1, ADC-5E1

in accordance with the following directives:

2006/95/EEC : The Low Voltage Directive and its amending directives
89/336/EEC : The Electromagnetic Compatibility Directive and its amending directives

has been designed to comply with the requirement of the following Harmonized Standard:

Low Voltage : EN 61010-1:2001
EMC : EN 61326-1:2006 Class B

More information may be obtained from Esco's authorized distributors located within the European Union. A list of these parties and their contact information is available on request from Esco.

Lin XiangQian
Vice President of Engineering Division

This Declaration of Conformity is only applicable for 230V AC 50Hz units

Chapter 1 - Product Information

1.1 About Ascent Max Ductless Fume Hood

Esco Ascent Ductless Fume Hoods provide protection to both laboratory personnel and the environment from toxic fumes and are quickly becoming a viable alternative to conventional fume hoods.

Unlike conventional fume hoods, these hoods filter out chemical fumes and recycle air directly back to the laboratory, providing energy savings, personnel and environmental protection, convenience as you do not have to deal with complicated ducting systems, and mobility, as ductless hoods are independent systems which do not require connection to extraction systems.

Esco ductless fume hoods are independently tested by INVENT-UK for the ability to filter contaminated air with efficiency and retention capacity as required by the British Standard BS 7989 and French Standard AFNOR NF X 15-211. Fume containment and airflow uniformity meet the requirements of ASHRAE 110-1995, BS 7258, EN 14175-3 and AFNOR NF X 15-203. The Esco combination of effective containment and safe carbon filtration opens new, cost effective applications for fume hood technology in laboratories of the 21st century.

1.2 Labels

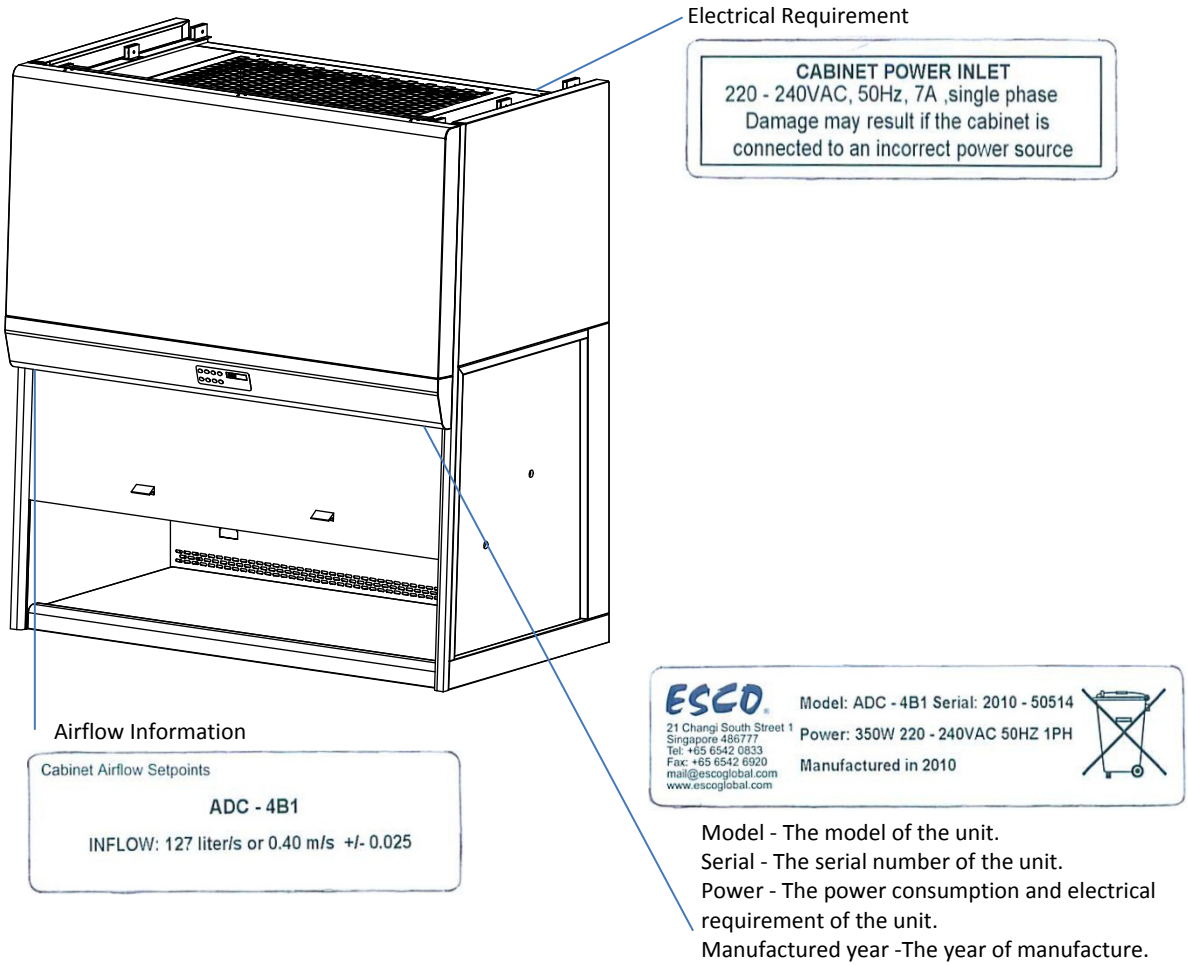

1.3 Quick View

1.3.1 ADC-_B_ / ADC-_D_ Series Quick View

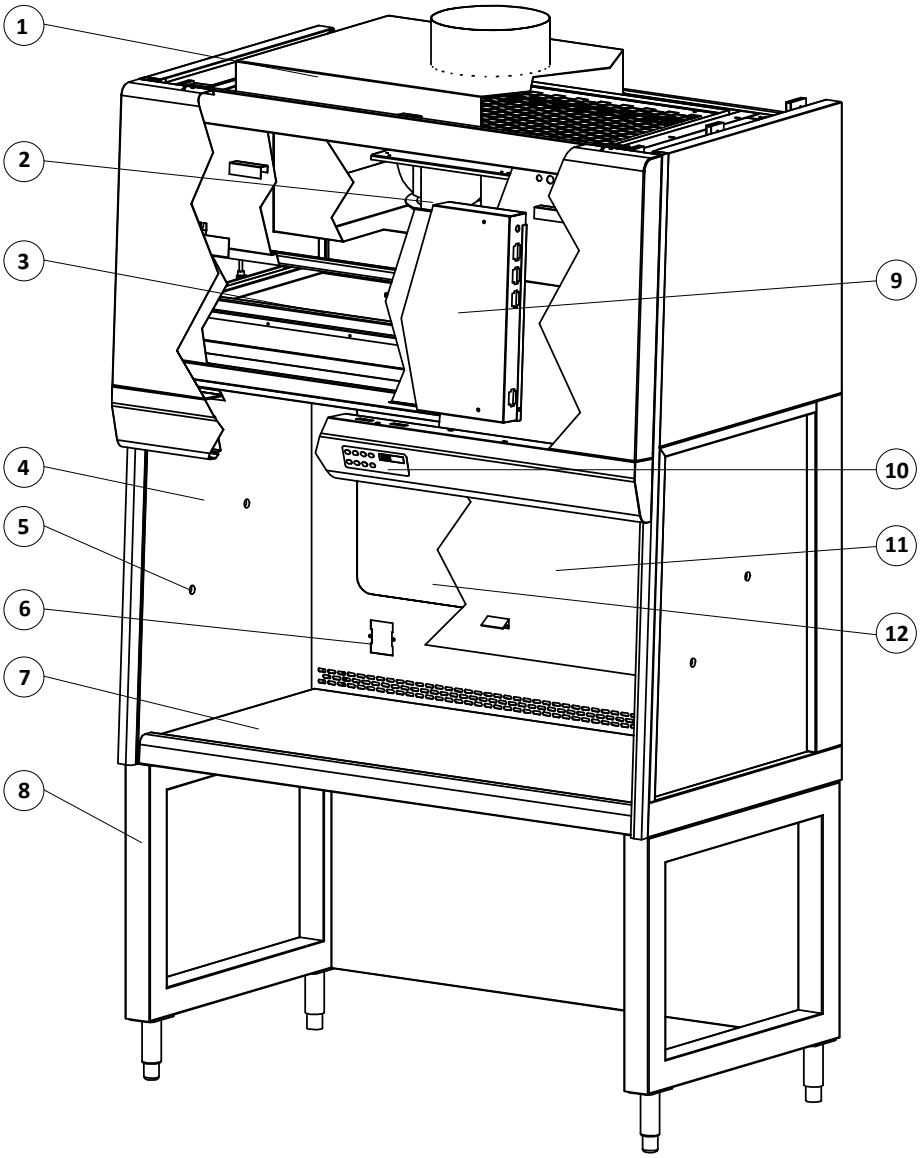

1. Exhaust Collar (optional)
2. Blower
3. Carbon Filter(s)
4. Tempered Glass Side Wall
5. Service Fixture Provision (optional)
6. Electric Outlet Provision (optional)
7. Stainless Steel Worktop
8. Support Stand (optional)
9. Electrical/Electronic Panel
10. Esco Sentinel Microprocessor Control
11. Tempered Glass Sliding Sash Window
12. Tempered Glass Back Wall (D Series only)

1.3.2ADC-_C_ / ADC-_E_ Series Quick View

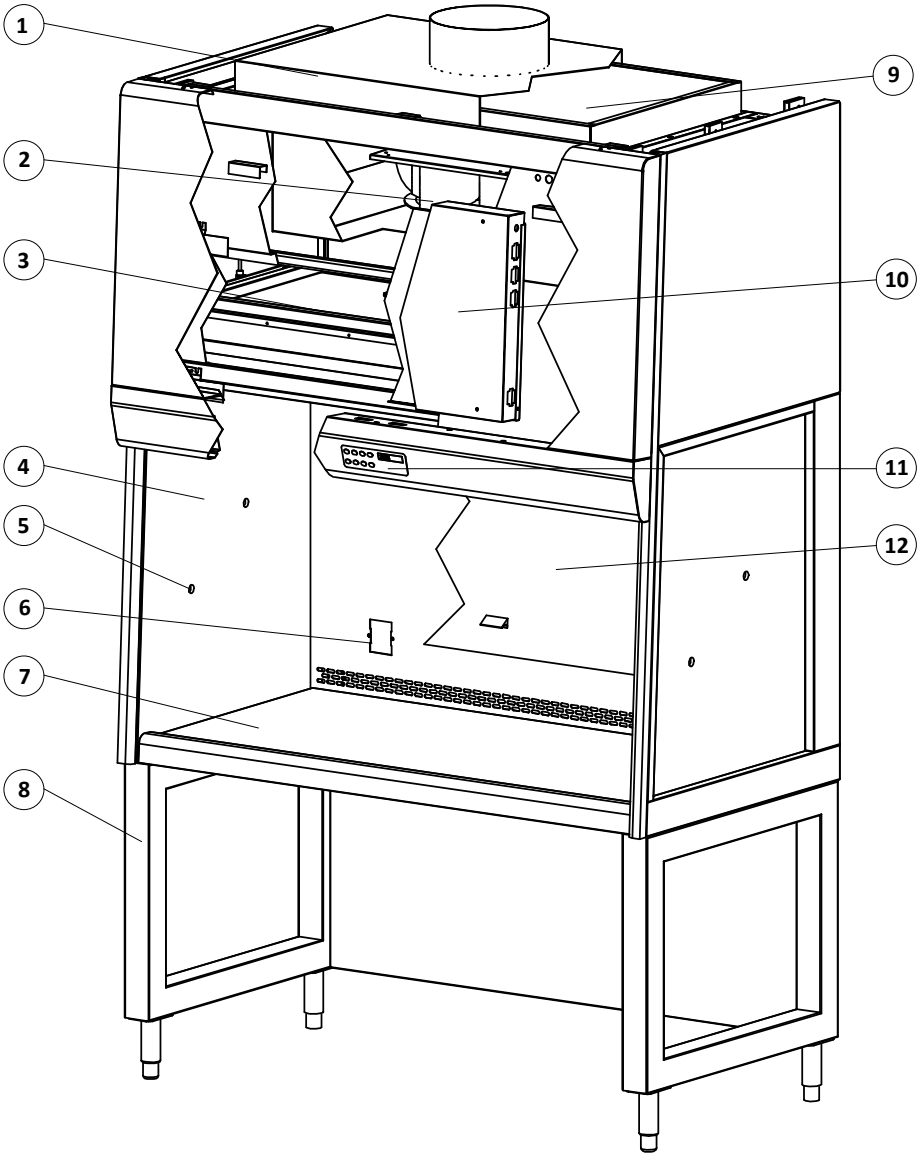

1. Exhaust Collar (optional)
2. Blower
3. Carbon Filter(s)
4. Tempered Glass Side Wall
5. Service Fixture Provision (optional)
6. Electric Outlet Provision (optional)
7. Stainless Steel Worktop
8. Support Stand (optional)
9. Backup Carbon (C Series) Filter or HEPA (E Series) Filter
10. Electrical/Electronic Panel
11. Esco Sentinel Microprocessor Control
12. Tempered Glass Sliding Sash Window

1.4 Airflow Pattern

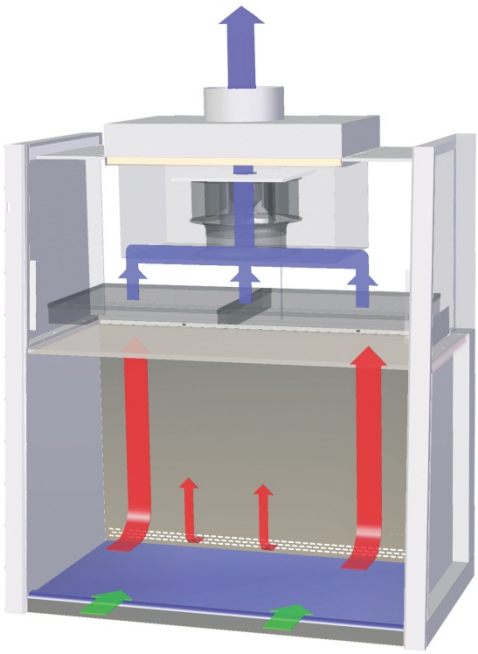

1. An inflow air curtain from the ambient environment into the cabinet with an average velocity of 0.5 m/s or 100 fpm is induced by the cabinet blower system.
2. Additional inflow air taken through the AutoPurge™ slots at the back of the work zone prevents fume accumulation for better operator protection.
3. The inflow flushes the entire work zone of the cabinet; within the main chamber of the cabinet, negative pressure (relative to the ambient environment) is maintained in order to ensure that no chemical fumes or vapors escape the work zone.
4. Air is taken through an activated carbon filter mounted in the interior; this removes all fumes from the exhaust air stream; exhaust air is re-circulated directly back to the room from the top of the cabinet.

1.5Filtracheck

FiltraCheck is a trademark service provided by Esco's fume filtration division. Customers who intend to purchase a ductless fume hood but are unsure whether the cabinet is suitable for their application, can forward a list of chemicals that they will be handling and their pattern of usage to Esco'sFiltraCheck service team.

A PDF Questionnaire form is available at http://ductless.escoglobal.com/. This questionnaire can be downloaded and either forwarded by email or by fax to Esco. After careful analysis of the provided chemicals list and pattern of usage, a proper advice document will be generated and provided to the customer in 3 days period.

This document will recommend the appropriate laboratory equipment; ducted fume hood or ductless fume hood or neither based on the investigation done by the FiltraCheck team. Depending on the type of chemicals used, the document may also contain a list of procedures, warnings, etc. that will help in ensuring a safer laboratory working environment. In the case of a recommendation of a ductless cabinet, appropriate grade and type of activated carbon also becomes a factor that has to be taken into consideration.

Chapter 2 - Control System

2.1 Sentinel Control System

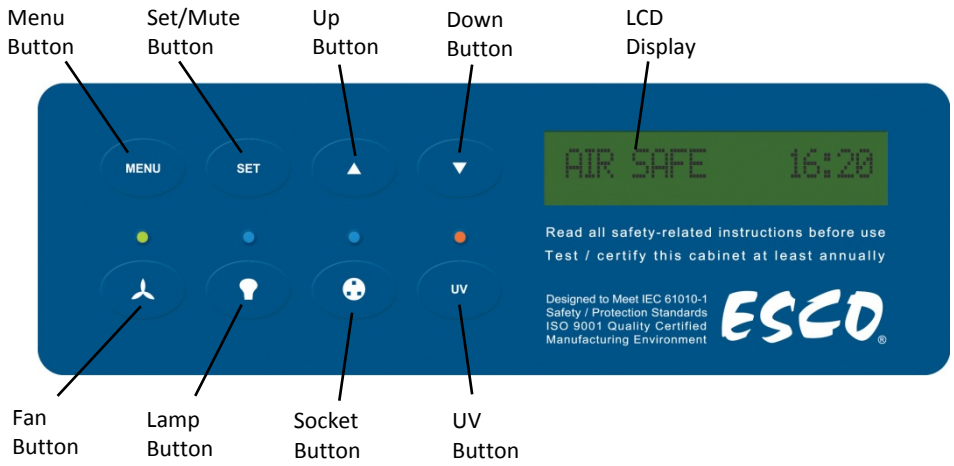

1. Fan Button
   - Turns on and turn off the fan.

2. Lamp Button
   - Turns on and turn off the lamp.

3. Socket Button
   - Turns on and turn off the electrical socket (retrofit kit).
   - The maximum rating of all the outlets in the cabinet is 5 A. if overloaded, the fuse will blow.

4. UV Button
   - Although present, this feature is not applicable.

5. Up (▲) and Down (▼) Arrow Button
   - Move upwards and downwards the menu options.
   - Increase and decrease corresponding value inside one of the menu options.
   - Move the sash window upward and downward (for motorized sash hood).

6. Set or Mute Button
   - Choose the menu or sub-menu currently displayed on the LCD screen.
   - Proceed to the next step or sequence inside one of the menu options.
   - Sash alarm can be muted by pressing Set button.

7. Menu Button

Alarm is disabled when you enter menu options

   - To enter and exit from the menu options.
   - To go back to the previous level of the menu options.
   - To access maintenance mode from “AIRFAIL!”error condition.

2.2Menu Options

When you are entering menu options, the alarm will sound to indicate that the microprocessor is not monitoring the operation of the hood and as such will not give airflow alarms. No further warnings will be given. Therefore, it is highly recommended that the user set the ADMIN PIN, which will restrict unauthorized access to the menu. The default ADMIN PIN from the factory is 0009.

Please refer to the following diagram for complete reference to all menu options available.

Press MENU button and enter the ADMIN PIN to enter the menu.

In the menu options:

- Press UP or DOWN button to move through the menu options.
- Press SET button to choose and proceed to the next step.
- Press MENU button to cancel and return to the previous step.

Exit menu options after making any changes in order to prevent unauthorized access to the menu.

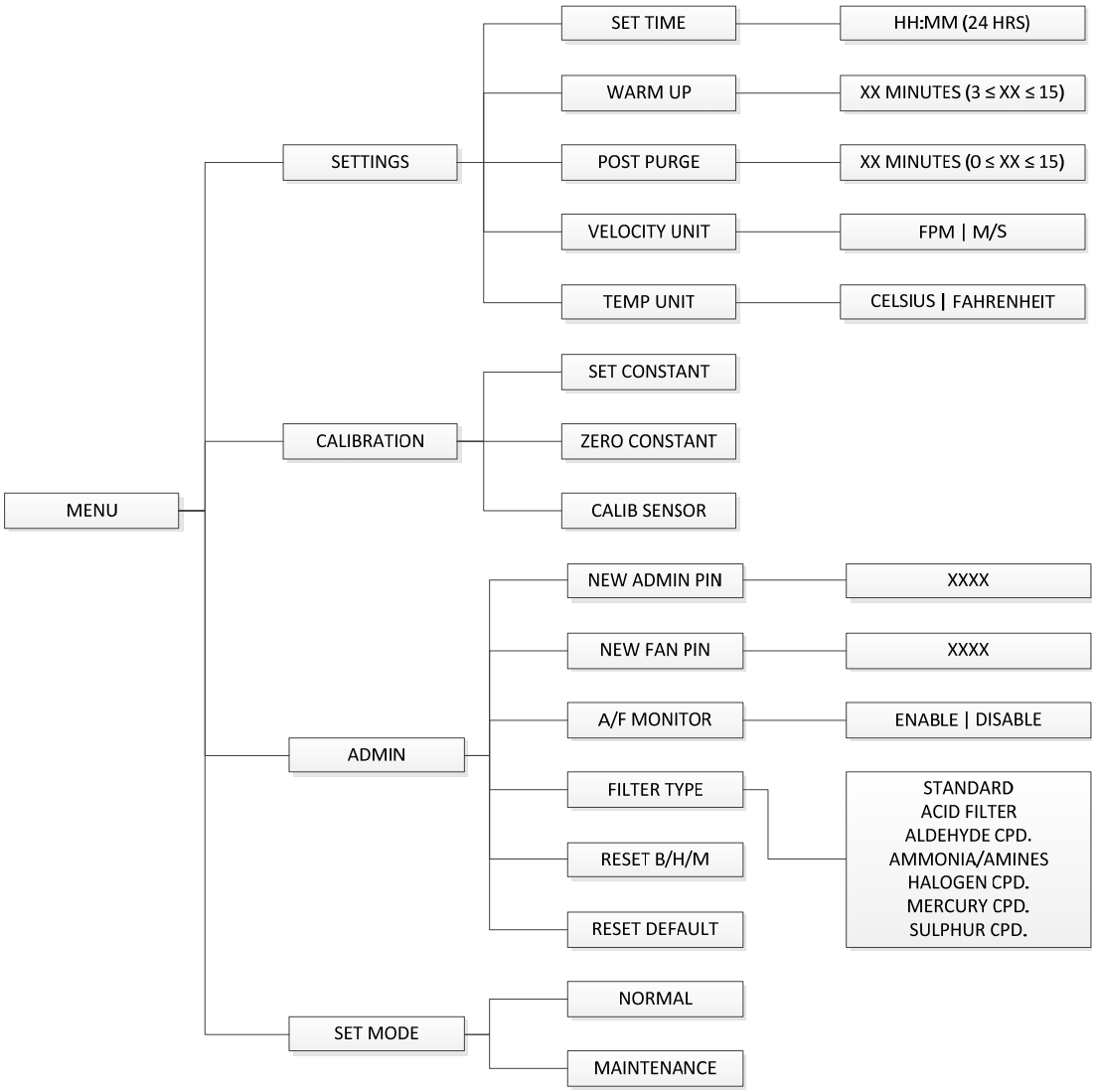

2.2.1 Settings

The user may use the settings menu function to customize the operation of the BSC to meet specific application requirements.

2.2.1.1 Set Time

Users can set the time by increasing/decreasing the hour and minute values. The correct time will be maintained even after the unit is turned off.

MENU → SETTINGS → SET TIME → HH:MM (24HRS)

1. Press MENU button to enter the menu options
2. If requested, enter ADMIN PIN digit by digit by using the UP, DOWN and SET buttons
3. The alarm will sound for a few second to indicate that the hood is unsafe for work
4. Press UP and DOWN buttons until display show “SETTINGS”. Press SET button to confirm
5. Press UP and DOWN buttons until display show “SET TIME”. Press SET button to confirm
6. Press UP and DOWN buttons to choose the hour (HH). Press SET button to confirm
7. Press UP and DOWN buttons to choose the minute (MM). Press SET button to confirm
8. Display will show “TIME SET” for a few seconds
9. Press MENU button to exit the menu options

2.2.1.2 Warm Up

There will be a period of warm-up, before the fan is fully functioning. This is to ensure that the sensors, the blower, and the control system are stabilized, as well as purging the work zone of contaminants. The default setting is 3 minutes and the user can set it between 3 to 15 minutes.

MENU → SETTINGS → WARM UP → XX MINUTES (3 ≤ XX ≤ 15)

1. Press MENU button to enter the menu options
2. If requested, enter ADMIN PIN digit by digit by using the UP, DOWN and SET buttons
3. The alarm will sound for a few second to indicate that the hood is unsafe for work
4. Press UP and DOWN buttons until display show “SETTINGS”. Press SET button to confirm
5. Press UP and DOWN buttons until display show “WARM UP”. Press SET button to confirm
6. Press UP and DOWN buttons to choose the minute (XX). Press SET button to confirm
7. Display will show “WARM UP SET” for a few seconds
8. Press MENU button to exit the menu options

2.2.1.3 Post Purge

After the user switches off the hood’s fan, there will be a post-purge period. This feature is to ensure that all residual contaminants are purged from the work zone. The default setting is 0 minute and user can set it between 0 to 15 minutes. Setting it to 0 minute will disable this feature. However, it is recommended to purge the fume hood by leaving the fan on for around 3 minutes after the work is complete.

MENU → SETTINGS → POST PURGE → XX MINUTES (0 ≤ XX ≤ 15)

1. Press MENU button to enter the menu options
2. If requested, enter ADMIN PIN digit by digit by using the UP, DOWN and SET buttons
3. The alarm will sound for a few second to indicate that the hood is unsafe for work
4. Press UP and DOWN buttons until display show “SETTINGS”. Press SET button to confirm
5. Press UP and DOWN buttons until display show “POST PURGE”. Press SET button to confirm
6. Press UP and DOWN buttons to choose the minute (XX). Press SET button to confirm
7. Display will show “POST PURGE SET” for a few seconds
8. Press MENU button to exit the menu options

2.2.1.4 Velocity Unit

Using this option, the user can select the unit in which air velocity is measured and displayed.

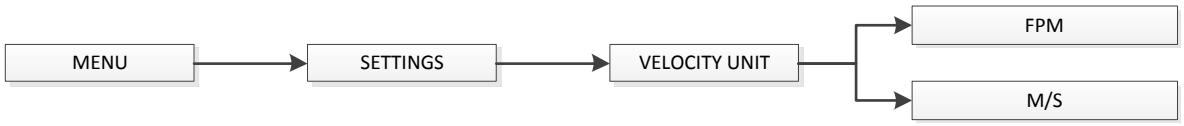

1. Press MENU button to enter the menu options
2. If requested, enter ADMIN PIN digit by digit by using the UP, DOWN and SET buttons
3. The alarm will sound for a few second to indicate that the hood is unsafe for work
4. Press UP and DOWN buttons until display show “SETTINGS”. Press SET button to confirm
5. Press UP and DOWN buttons until display show “VELOCITY UNIT”. Press SET button to confirm
6. Press UP and DOWN buttons to choose. Press SET button to confirm
7. Press MENU button to exit the menu options

2.2.1.5 Temperature Unit

Using this option, the user can select the unit in which air velocity is measured and displayed.

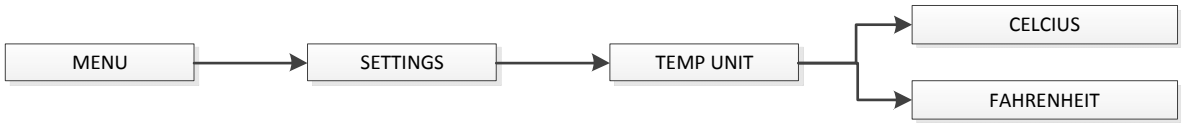

1. Press MENU button to enter the menu options
2. If requested, enter ADMIN PIN digit by digit by using the UP, DOWN and SET buttons
3. The alarm will sound for a few second to indicate that the hood is unsafe for work
4. Press UP and DOWN buttons until display show “SETTINGS”. Press SET button to confirm
5. Press UP and DOWN buttons until display show “TEMP UNIT”. Press SET button to confirm
6. Press UP and DOWN buttons to choose. Press SET button to confirm
7. Press MENU button to exit the menu options

2.2.2 Calibration

The purpose of calibration is to ensure the accuracy of the airflow display and alarm (if present). This involves measuring airflow with reference instrumentation and establishing reference between airflow sensor(s) on the hood to the standard reference. Calibration should only be carried out by trained personnel. This section is presents a brief overview of the calibration menu function. For more information, refer to test report.

2.2.2.1 Set Constant

Every sensor manufactured by Esco has a specific Sensor Constant which is used for temperature compensation performed by the temperature sensor.

2.2.2.2 Zero Sensor

This option let the controller record the specific sensor output voltage and correspond it to 0 m/s or 0 fpm.

2.2.2.3 Calib Sensor

This option allows proper calibration and operation of the airflow sensor alarm. There will be three points to be calibrated, namely inflow fail point, inflow nominal point, and downflow nominal point.

2.2.3 Admin

The admin menu allows you to change both fan and Admin. PIN, also to disable it (not recommended). The reset blower hour meter is usually used after you change the blower (or filter) and it can easily give you the indication on when to do maintenance. While the reset default function will return the options in the settings menu to their factory settings.

2.2.3.1 New Admin. PIN

ADMIN PIN restricts access to MENU functions, including service functions, like calibration. User must enter four digits PIN before accessing MENU. ADMIN PIN has higher priority and can be used to control the fan (override Fan PIN).

ADMIN PIN can also be used to switch to maintenance mode from ERR.MSWITCH and AIR FAIL! errors condition.

The default PIN is 0009. Setting PIN to 0000 will disable this feature.

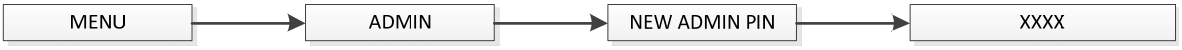

1. Press MENU button to enter the menu options
2. If requested, enter ADMIN PIN digit by digit by using the UP, DOWN and SET buttons
3. The alarm will sound for a few second to indicate that the hood is unsafe for work
4. Press UP and DOWN buttons until display show “ADMIN”. Press SET button to confirm
5. Press UP and DOWN buttons until display show “NEW ADMIN PIN”. Press SET button to confirm
6. Press UP and DOWN buttons to choose the numerical digit. Press SET button to confirm. Do this for all 4 digits
7. Display will show “CONFIRM PIN?”. Press SET button to confirm
8. Press MENU button to exit the menu options

2.2.3.2 New Fan PIN

Fan PIN restricts access to fan control. User must enter four-digit PIN before switching fan on or off. As such, it can restrict access to operating the hood by unauthorized personnel. Fan PIN is also needed to disable the alarm when the sash is fully raised and cleaning needs to be performed.

It is recommended that the Fan PIN be issued only to personnel authorized to use the hood.

The default PIN is 0001. Setting the PIN to 0000 will disable this feature.

1. Press MENU button to enter the menu options
2. If requested, enter ADMIN PIN digit by digit by using the UP, DOWN and SET buttons
3. The alarm will sound for a few second to indicate that the hood is unsafe for work
4. Press UP and DOWN buttons until display show “ADMIN”. Press SET button to confirm
5. Press UP and DOWN buttons until display show “NEW ADMIN PIN”. Press SET button to confirm
6. Press UP and DOWN buttons to choose the numerical digit. Press SET button to confirm. Do this for all 4 digits
7. Display will show “CONFIRM PIN?”. Press SET button to confirm
8. Press MENU button to exit the menu options

2.2.3.3 A/F Monitor

Whenever the air velocity falls below the fail point, the air fail alarm will be triggered. This option is used to enable/disable alarm.

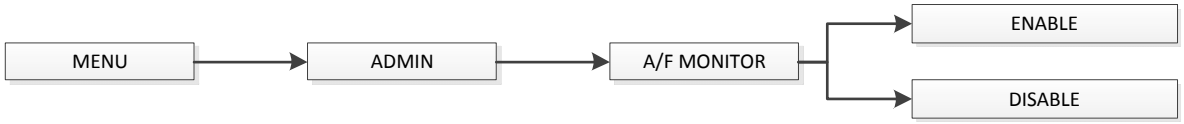

1. Press MENU button to enter the menu options
2. If requested, enter ADMIN PIN digit by digit by using the UP, DOWN and SET buttons
3. The alarm will sound for a few second to indicate that the hood is unsafe for work
4. Press UP and DOWN buttons until display show “ADMIN”. Press SET button to confirm
5. Press UP and DOWN buttons until display show “A/F MONITOR”. Press SET button to confirm
6. Press UP and DOWN buttons to choose. Press SET button to confirm
7. Press MENU button to exit the menu options

2.2.3.4 Filter Type

To set the type of main carbon filter(s) used in the hood. The options include standard, acid filter, aldehyde compound, ammonia/amines, halogen compound, mercury compound and sulphur compound.

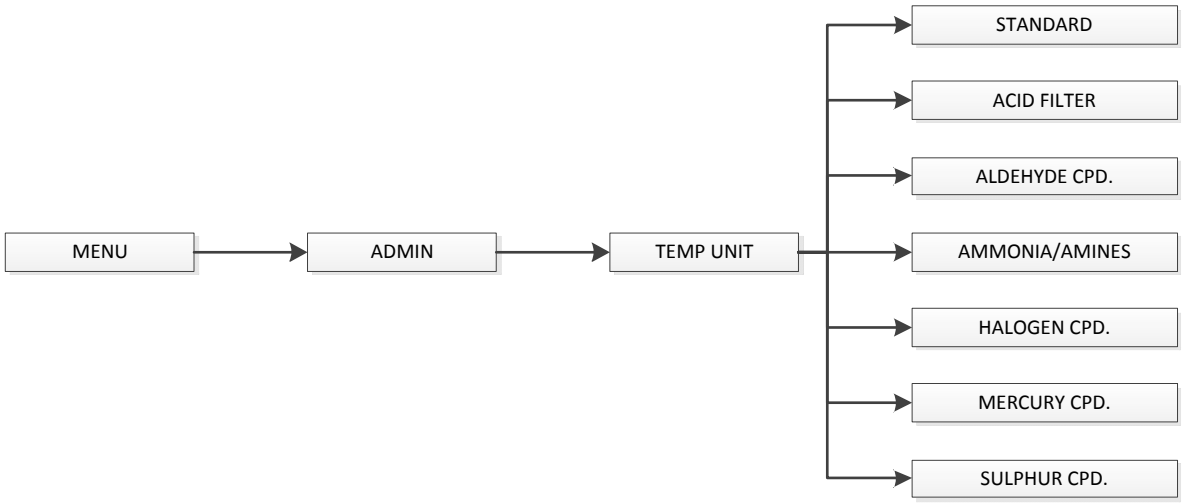

1. Press MENU button to enter the menu options
2. If requested, enter ADMIN PIN digit by digit by using the UP, DOWN and SET buttons
3. The alarm will sound for a few second to indicate that the hood is unsafe for work
4. Press UP and DOWN buttons until display show “ADMIN”. Press SET button to confirm
5. Press UP and DOWN buttons until display show “FILTER TYPE”. Press SET button to confirm
6. Press UP and DOWN buttons to choose. Press SET button to confirm
7. Press MENU button to exit the menu options

2.2.3.5 Reset Blower Hour Meter

This option is used to reset the blower hour meter. The blower hour meter indicates how long the blower has been in operation. Maximum counter is set at 9999 hours. The counter value can be checked while in maintenance mode. The value can also provide some help in setting up maintenance schedule, including filter change.

1. Press MENU button to enter the menu options
2. If requested, enter ADMIN PIN digit by digit by using the UP, DOWN and SET buttons
3. The alarm will sound for a few second to indicate that the hood is unsafe for work
4. Press UP and DOWN buttons until display show “ADMIN”. Press SET button to confirm

5. Press UP and DOWN buttons until display show “RESET B/H/M”. Press SET button to confirm
6. The display shows “”READ MANUAL” then “PRESS SET”. Press SET button to confirm
7. Press MENU button to exit the menu options

2.2.3.6 Reset Default

User can reset the default setting by choosing this option. The features being reset are warm-up period (3 minutes), post-purge period (0 minute), velocity unit (Metric), temperature unit (Celsius), Admin. PIN (0009), and Fan PIN (0001).

Note that the calibration settings cannot be reset as it may cause the BSC to operate in an unsafe manner. The hour meters cannot be reset either.

1. Press MENU button to enter the menu options
2. If requested, enter ADMIN PIN digit by digit by using the UP, DOWN and SET buttons
3. The alarm will sound for a few second to indicate that the hood is unsafe for work
4. Press UP and DOWN buttons until display show “ADMIN”. Press SET button to confirm
5. Press UP and DOWN buttons until display show “RESET DEFAULT”. Press SET button to confirm
6. The display shows “”READ MANUAL” then “PRESS SET”. Press SET button to confirm
7. Press MENU button to exit the menu options

2.2.4 Setting Mode

Ductless fume hood has two working mode, the default normal mode which is used in a day to day activity, and maintenance mode.

2.2.4.1 Normal Mode

Every time the hood is restarted, this mode will be activated by default. In this mode, all alarms and interlocks are enabled.

2.2.4.2 Maintenance Mode

Maintenance mode should only be accessed by qualified personnel during maintenance. In this mode, all alarms are disabled and all interlocks are defeated.

2.3 Alarm and Warnings

The warning AIR FAIL! indicates that there is airflow failure. The operator should check if there is any obstruction to the airflow, and correct it if possible. However, if the problem continues, the operator should stop working as the hood’s protection may have been compromised. Call service or Esco’s local distributor.

Other alarms that indicate a failure or an error in the BSC system:

- ERR.AIRFAIL will be displayed if the blower is turned off while there is an airflow failure.
- ERR.CALIB will be displayed if the airflow velocity sensor is not yet calibrated.

Chapter 3 – Basic Hood Operation

3.1 Sash Window Operation

3.1.1 Sash Window State

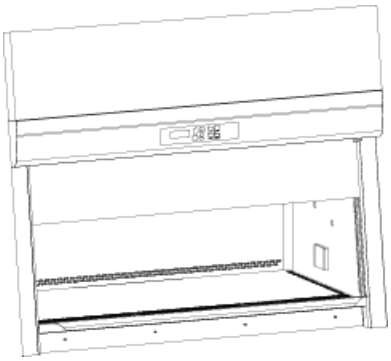

Sash is fully open

- ✓ Blower can be active
- ✓ Fluorescent lights can be used
- × Unsafe working condition

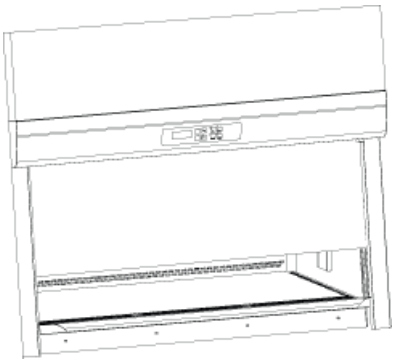

Sash is in safe position

- ✓ Blower can be activated
- ✓ Fluorescent lights can be used
- ✓ Safe working condition

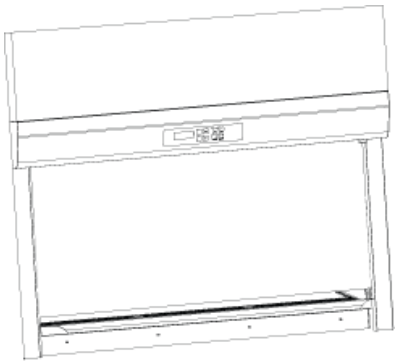

Sash is fully closed

- × Blower can't be activated
- × Fluorescent lights can't be used

3.1.2 Operating Motorized Sash Window (Only for hoods with motorized sash window)

The motorized sash uses a "push and hold" mechanism, so if you remove your finger from the button the sash will stop immediately – this is a safety feature to control the closure and prevent anything getting trapped in the aperture as the sash descends.

Lower Sash from Fully Open Position
When the sash is fully open, pressing the down button and holding it will cause the sash to move to the Safe Height setting and stop. If the fluorescent lights are on as the sash descends, they will stay on as long as the sash stops in the Safe Position. If you release the button before the sash has reached Safe Position the lights will switch off automatically.

Lower Sash from Safe Height Position
When the sash is at safe operating height pressing the down button and holding it will cause the sash to move down to the fully closed position and stop. If the fluorescent lights are on as the sash descends, they will switch off automatically as soon as the sash reaches fully closed. If you release the button before the sash has reached the fully closed position the lights will switch off automatically

Raise Sash from Fully Closed Position
When the sash is fully closed, pressing the up button and holding it will prompt the user to input the password to turn on the fan. If the password is correct, if it was on fan will turn on and the sash will move up to the Safe Height setting and stop.

Raise Sash from Safe Height Position
When the sash is safe operation position, pressing the up button and holding it will cause the sash to move up to the fully open position and stop. If the fluorescent lights are on as the sash rises, they will stay on as long as the sash is allowed to fully open. Stopping the sash midway will cause the lights to switch off automatically.

3.1.3 Using Sash Window

- The sash window should be fully closed when the hood is not in use. This helps keep the work zone interior clean.
- The sash window should always be in the normal operating height at all times when the hood is in use. Even if the cabinet is left unattended, but the blower is on, the sash window should never be moved from the normal operating height, unless during loading or unloading of materials/apparatus into the hood.
- The alarm will be activated whenever the sash window is moved from the normal operating height.
- The sash window may be opened to its maximum position for the purpose of loading/unloading of materials/apparatus into the hood. When the sash window is fully opened, the alarm sound may be muted by pressing MUTE button. Light can be turned on to facilitate cleaning.

3.2 Starting and Shutting Down the Ductless Fume Hood

3.2.1 Turning on the Hood

1. Raise the sash to the indicated normal operational height (READY state).
2. Turn on the lamp by pressing the lamp button.
3. Turn on the fan by pressing the FAN button. Input the Fan PIN if asked (default: 0001). This will start the warm up procedure (default: 3 minutes). All buttons are disabled during warm up period.
4. The hood is ready for work.

3.2.2 Turning off the Hood

1. Turn off the fan by pressing the FAN button. Input the Fan PIN if asked (default: 0001). This will start the post purge procedure (default: 0 minute). All buttons are disabled during post purge period.
2. Lower the sash to the fully closed position. The sash can be lowered immediately after turning off the fan as it will not interrupt the post purge procedure.

3.3 Operating the Ductless Fume Hood

3.3.1Working in the Hood

- Check the label on the ductless fume hood to see what chemicals the hood is intended for – and only use the hood for any procedure involving such chemicals.
- Ensure the exhaust is operating before commencing work.
- After all the apparatuses/items have been arranged, allow the blower to run for another 3 minutes in order to purge work zone of contaminants.
- Minimize room activity since these external airflow disturbances may adversely affect the hood's internal airflow, impairing the containment capabilities of the fume hood.
- Keep your head outside of the hood.
- Work as far into the hood as possible and with slow, deliberate movements, to minimize airflow disturbances.
- Work with the sash as fully lowered as possible, utilizing the sash as a natural barrier.
- Do not use this hood as a storage area. Items can block airflow and interfere with containment.
- If performance is suspected, or an airflow alarm is triggered *(if installed)*, terminate usage, close the sash completely, and cease work.
- Do not let organic chemicals evaporate in the hood – use a proper waste bottle. Do not leave uncapped bottles of chemicals or waste in a hood.
- Certify this hood annually to verify airflow velocity, smoke patterns and containment.
- Perform routine maintenance in accordance with the manufacturer's instructions.

3.3.2 Working Ergonomics

On most occasions, you would most likely be operating the fume hood in sitting rather than standing posture. There are some obvious advantages of the sitting posture:

- The physiological energy cost and fatigue involved in sitting are relatively less
- Sitting posture provides the body with a stable support

However, sitting position has some drawbacks too:

- The working area available is fairly limited
- There is a potential risk of being constrained in the same posture for a long time
- Sitting posture is one of the most stressful postures for one's back

Therefore you should pay careful attention to the following guidelines in order to achieve comfortable and healthy working conditions:

1. Always ensure that your legs have enough legroom.
2. Keep your lower back comfortably supported by your chair. Adjust the chair or use a pillow behind your back whenever necessary.
3. You should place your feet flat on the floor or on a footrest. Don't dangle your feet and compress your thighs.
4. You should keep varying your sitting position throughout the day at regular intervals so that you are never in the same posture for too long.
5. Observe the following precautions with respect to your eyes:
    - Give your eyes frequent breaks. Periodically look away from the work area and focus at a distant point.
    - Keep your glasses clean.
6. Arrange the items/apparatus frequently used in your work in such a way that you can minimize the physical strain involved in handling them.
7. Exercise regularly

Ergonomics accessories available with Esco include:

a. Armrest padding
b. Lab chair
c. Footrest

Please contact your local distributor or Esco for more information.

Chapter 4 – Installation

4.1 General Requirements

4.1.1 Location Requirements

Placing the fume hood in a proper location is important. Bad location may affect the performance of the workstation.

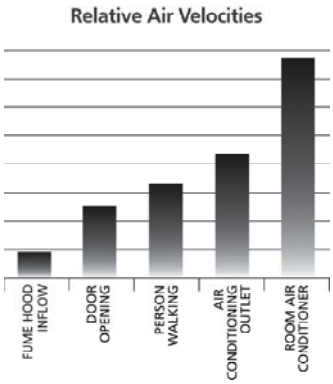

As seen in the chart, your equipment's internal airflow velocity is relatively low, when compared to the airflow disturbances potentially caused by the opening of a door, a person walking by or a direct exposure to an air-conditioning outlet. These external airflow disturbances can affect the proper laminar flow of the fume hood and impaired the protection offered by the workstation.

When installing the fume hood, it should be located as far away as possible from sources of airflow disturbance and in an orientation which optimally shields the fume hood's airflow from all external airflow disturbances.

The following requirements should be taken into account:

- The location should be far away from any kind of heat source (heaters, fan converters, etc.) for facilitating optimum operating conditions.
- There should be adequate space left for cleaning the back of the cabinet.
- There should be unobstructed access to the main power supply point.

4.1.1.1 Position Requirements

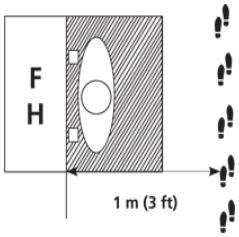

Any pedestrian traffic routes, thoroughfares or walkways should be at least 1.0 m (3') from the front of the fume hood

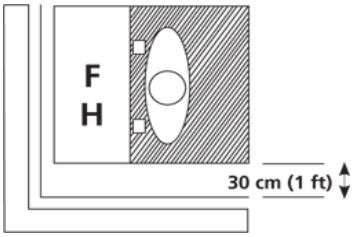

Allow at least 30 cm (1') clearance on both sides of the fume hood.

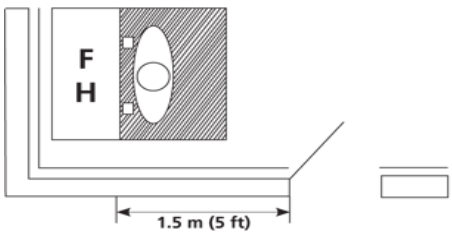

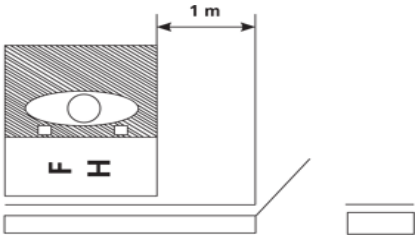

You should not position the fume hood where the distance between the aperture and any doorway is less than 1.5 m (5') or the distance between the side panel and any doorway is less than 1.0 m (3').

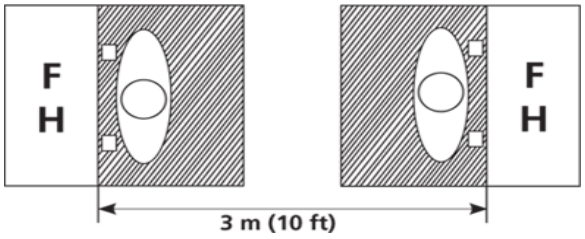

The distance from the aperture to the aperture of an opposing fume hood, fume cupboard, etc. should be in excess of 3 m (10')

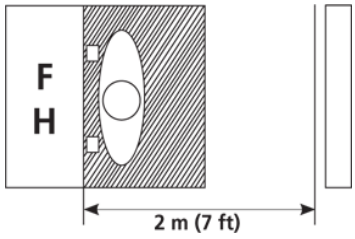

You should not position the fume hood in a location where there is an opposing wall (or other obstruction likely to affect airflow) within 2 m (7') of the front aperture.

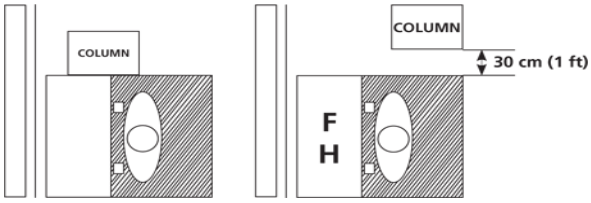

As with walls, any large obstruction such as a pillar or column projecting beyond the plane of the front aperture should not be within 30 cm (1') of the sides of the fume hood.

4.1.1.3 Relocating the Hood

Normally ductless fume hood are rarely moved once they are in their ideal positions, but if the need arise to relocate or even repackage the unit, then here is some considerations:

- Before moving the fume hood, remember to secure all moving parts, ex: sash.
- Fume hood is heavy, be careful with the weight distribution. Usually it will take 6 or more people to move it.

For repackaging:

- Bolt the fume hood to the pallet.
- Strap the fume hood body down to the pallet.
- Repackage as necessary. If possible, use original packaging.
- When moving the fume hood, use material handling equipment and lift the pallet.

4.1.2 Environmental Requirements

- Indoor use only
- Altitude of up to 2000 meter (6600')
- Relative humidity between 20% – 90%
- Temperature between 18°C – 30°C (65°F – 86°F)

4.1.3 Support Requirements

- The support/cabinetry should be leveled
- The support/cabinetry must be able to withstand the weight of the cabinet and any apparatus within
- The support/cabinetry must be ergonomics

> - *Esco recommends Esco support stand with leveling feet for BSC*
> - *WithoutEsco's support stand, Esco cannot guarantee the cabinet's resistance against tipping and hence the user would be solely responsible for ensuring that the cabinet is securely fastened to third party support/cabinetry.*
> - *The use of non-leveling feet Esco support stand will nullify the third party certification (NSF or TÜV) that the cabinet may have, because only Esco leveling feet support stand was used during certification.*The maximum NSF approved leg levelers adjustment is 50 mm (2").

4.1.4 Exhaust Requirements

The exhaust filter area is especially susceptible to disruptive air currents or air drafts. A clearance of at least 30 cm (1') is recommended between the highest point of the cabinet and the ceiling. If the distance is less than 30 cm (1'), the airflow alarm system may need re-calibration. In fact, for proper exhaust filter leak scanning purposes, a minimum clearance of 50 cm (1'8") is recommended.

4.1.5Electrical Requirements

- The power rating for each model is shown in section 3.2 Technical Specification Summary Table in Product Specification Section. Ensure that the outlet is rated accordingly. The hood will not work properly or may even be damaged if it is powered by an incorrect source.
- The hood's maximum voltage fluctuation is ±2% of nominal voltage, otherwise install power stabilizer.
- The hood should be connected to an unobstructed dedicated power outlet(s).
- Surge protection and UPS are strongly recommended for better protection.
- All electrical wirings for fluorescent lamp, blower and the Sentinel™ controller are internally wired and connected to a single point junction box for hook up by a qualified electrician.
- The power cable is located on the right hand side of the fume hood and the cord is 2.5m long. When preparing the installation site, try to ensure the outlet is located to the right of the fume hood for ease of access.

4.1.6 Service Line Requirements

- All service lines should be installed by a suitably qualified and certified engineer, in accordance with all applicable local, state and government regulations.
- Service line attachments should be equipped with an emergency shut off valve that can be accessed quickly and with ease, should the need arises.
- You should check with your local service installer as to whether there is a need to install pressure regulators to reduce the line pressure.
- Your ductless fume hood can accommodate service fixtures on the left or right hand side of the cabinet. Make allowance for the positioning of service lines when planning the installation site to ensure ease of access to emergency shut off valves.

4.2 Installation

4.2.1 Connecting the Electrical Supply

- Before connecting any electrical wiring to the fume hood structure, first refer to the serial label for the proper electrical characteristics.
- Review the electrical wiring diagrams and instructions in Appendix section prior to installation. All wiring should be done in accordance with the National Electrical Code.
- Connect the supplied electrical cord to the input on the top of the fume hood. Make sure the cable connector is seated firmly in the socket.

4.2.2 Safety Labels on the Fume Hood

- Anyone using the fume hood should familiarize themselves with the various labels displayed in and on the fume hood.
- It is very important that users are familiar with the meanings of product labeling before attempting to use the unit.

4.2.3 Preliminary Cleaning

Wipe the interior and exterior of the fume hood with water or a mild household detergent.

4.3 Performance Validation/Certification

After having installed the fume hood but before starting to use it, fume hood performance must be validated and certified to factory standards. It is recommended that this validation and certification be performed only by a qualified technician who is familiar with the methods and procedures for certifying fume hoods.

The testing methods and equipment needed for carrying out the tests are specified on the test report.

4.3.1 Disclaimer

The performance and safety of all Esco fume hoods are rigorously evaluated at our factory. Regular field certification is important to ensure factory standards are maintained.
During recertification:

- Fume Hood face velocities and flow patterns are verified against the manufacturer's specifications and relevant international standards.
- Tracer gas containment test is performed.

4.3.2 References for Qualified Certifiers

North America

- Esco (www.us.escoglobal.com)

UK, China, India, Middle East/North Africa, Malaysia, Singapore

- Esco offers field certification services directly. Contact local Esco office.

Other Countries

- Contact Esco or local distributor

Chapter 5–Service and Maintenance

5.1 Scheduled Maintenance

Proper and timely maintenance is crucial for trouble free functioning of any device and your Esco ductless fume hood is no exception to this rule. We strongly recommend that you follow the maintenance schedule suggested hereunder in order to obtain optimal performance from your Esco ductless fume hood.

No.	Description of Task to Perform	Maintenance to be carried out every				
		Week	Month	Quarter	1 Year	2 Years
1	Check the alarm and measure the basic airflow	√				
2	Clean the interior work surface and walls with soap water	√				
3	Wipe down sash with appropriate glass cleaner	√				
4	Clean the exterior surfaces of the ductless fume hood		√			
5	Measure the ductless fume hood face velocity		√			
6	Check fans, motors, drives and bearings for proper operation			√		
7	Check fluorescent tubes for proper operation			√		
8	Test the operation of airflow alarm			√		
9	Repair defect and lubricate as necessary			√		
10	Clean the stainless steel surface using MEK			√		
11	Re-certification				√	
12	Change the fluorescent lamps					√
13	Check filter saturation	(check according to Filtracheck recommendation)				

Cleaning the Hood

- Clean the work surface and walls with soap water
- Clean the sash window using an appropriate glass cleaner
- Use a damp cloth to clean the exterior surface of the fume hood, particularly on the front and top in order to remove dust that accumulated there
- Use clean water to finish the cleaning and wash away any residue from the soap water and glass cleaner
- For removing stubborn stains or spots on the stainless steel surface, make use of MEK (Methyl-Ethyl-Ketone). In such cases, make sure that you wash the steel surface immediately afterwards with clean water and some liquid detergent. Use a polyurethane cloth or sponge for washing. Regularly cleaning the stainless steel surface can help you retain the attractive factory finish.

Test the audible and visual alarm

If possible, cover the airflow sensor; otherwise cover the perforations on the back wall – this should disrupt the airflow of the hood enough to activate the alarm

Check the hoods functionality

- Check the hood's mechanical functionality; ex: sash window – lubricate if necessary
- Check the hood's electrical functionality; ex: fluorescent lamp – replace if necessary
- Check the hood for any defect, repair immediately

Check filter saturation

Check for filter saturation often. The saturation level of a filter is directly affected by the amount of chemical fume generated by the experiment conducted inside the fume hood. Use particle counter below and above the main (and backup) filter and compare the results to check the saturation level of the carbon filter.

Re-certification

All ductless fume hoods must be re-certified annually by a certified engineer.

5.2 Replacingthe Filters

5.2.1 Main Carbon Filter(s) Changing Procedure for ADC-2__, ADC-3__ and ADC-4__

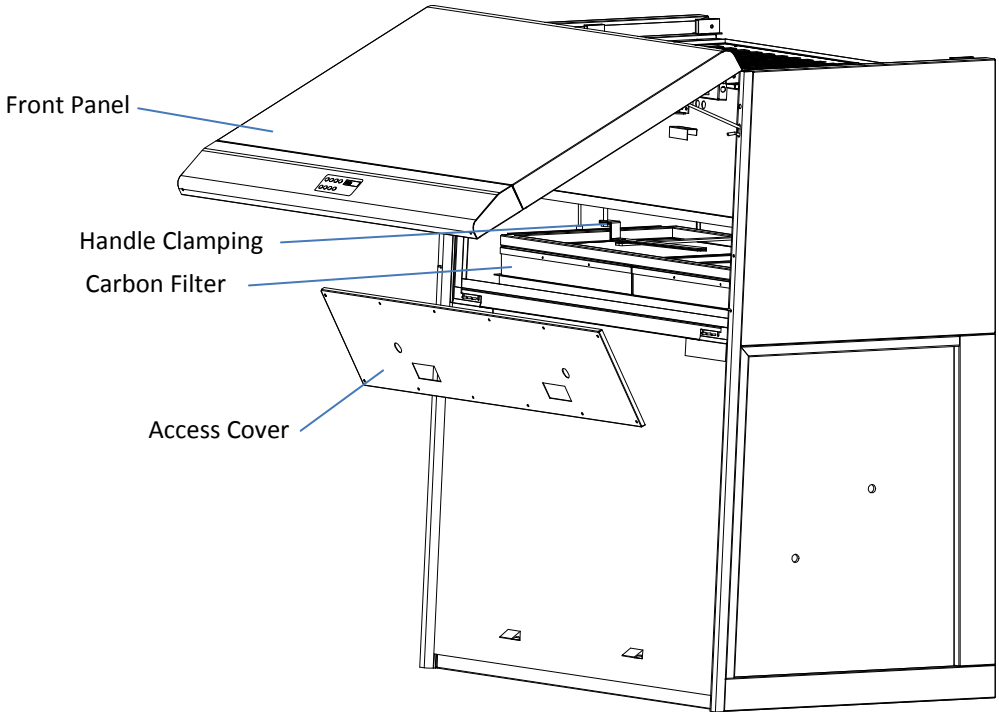

1. Open the Front Panel
2. Open the Access Cover
3. Pull out Handle Clamping to unlock the frame filter clamping
4. Remove the main carbon filter
5. Reverse the above steps to finish the procedure

5.2.2 Main Carbon Filter(s) Changing Procedure for ADC-5__ and ADC-6__

1. Open the Front Panel
2. Open the Access Cover
3. Unscrew the bolt holding down the frame filter clamping and remove it
4. Replace the main carbon filter
5. Reverse the above steps to finish the procedure

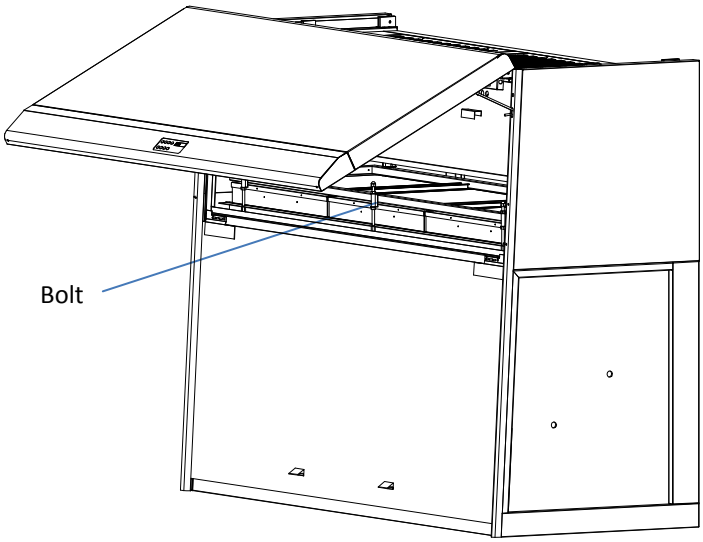

5.2.3 Secondary Backup Filter Changing Procedure

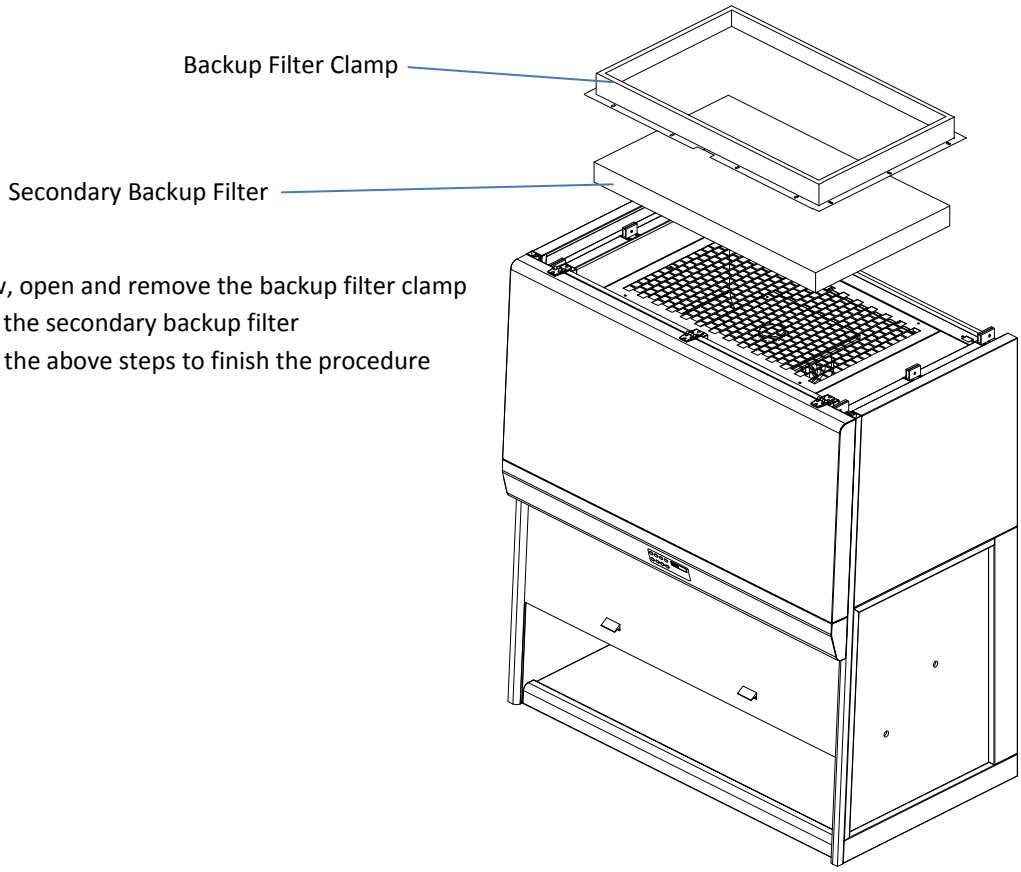

1. Unscrew, open and remove the backup filter clamp
2. Replace the secondary backup filter
3. Reverse the above steps to finish the procedure

5.3 Replacingthe Airflow Sensor

1. Lower the Sash Balancing until below the sensor cover level
2. Open the sensor cover
3. Open the sensor housing (electrical glan)
4. Take the sensor out of the housing
5. Replace the sensor
6. Reverse the above steps to finish the procedure

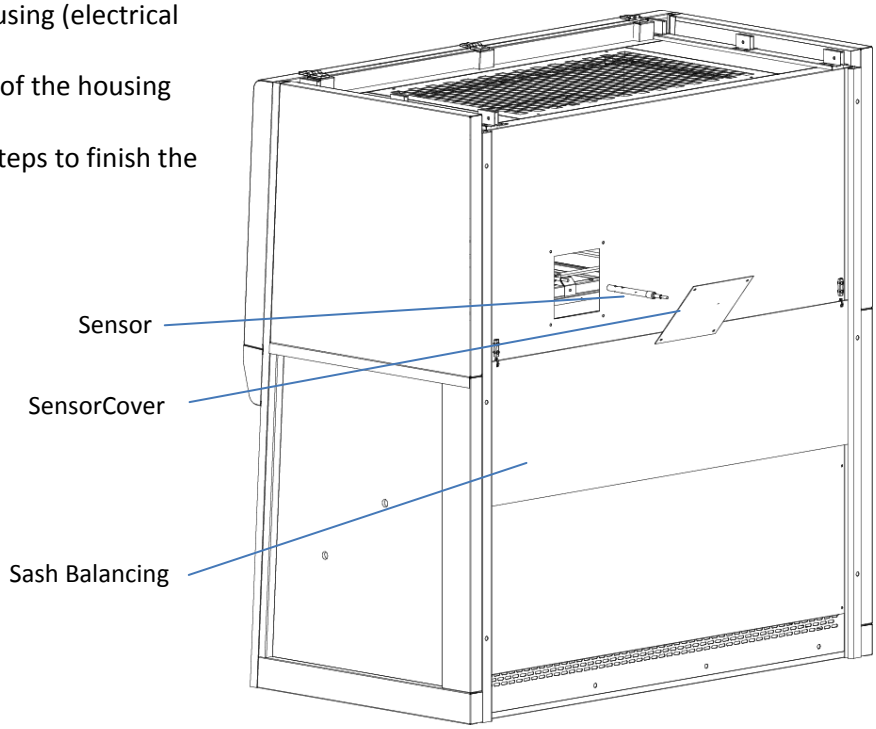

5.4Replacingthe Blower

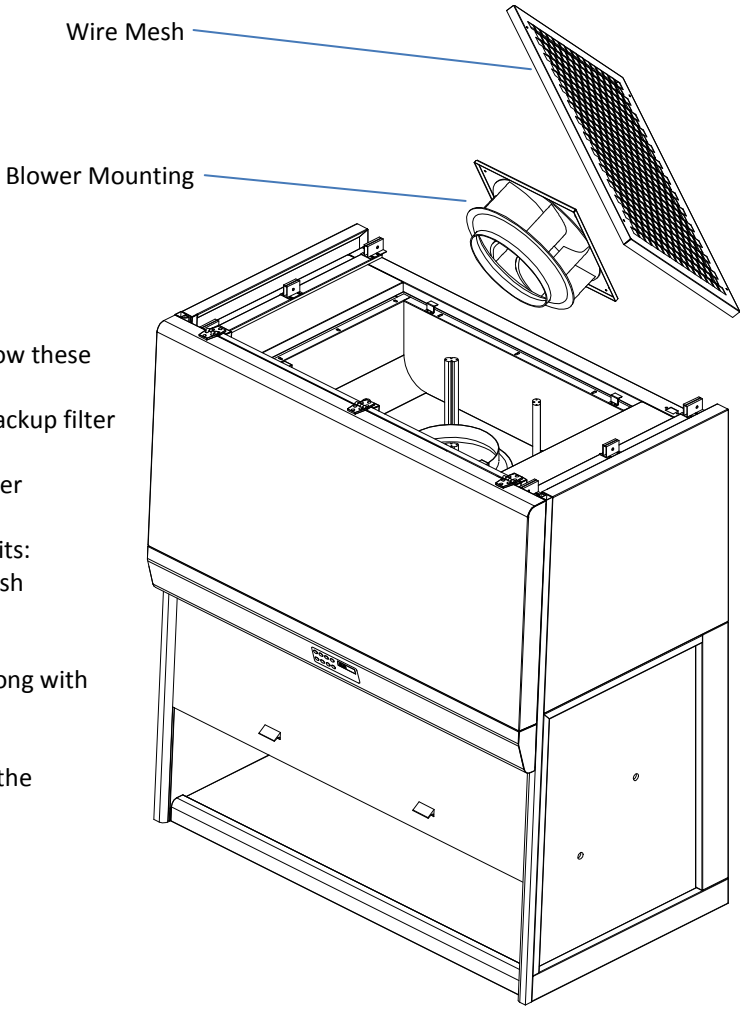

For units with secondary backup filter, follow these additional steps:

1. Unscrew, open and remove the backup filter clamp
2. Remove the secondary backup filter

The following steps are applicable to all units:

1. Unscrew and remove the wire mesh
2. Disconnect the blower wiring
3. Unscrew the blower mounting
4. Take out the blower mounting, along with the blower
5. Replace blower
6. Reverse the above steps to finish the procedure

5.5Replacing the Fluorescent Lamp

There are two fluorescent lamps in the ductless fume hood; they are located behind the blue panel at the top of the sash.

Before changing the fluorescent bulbs, ensure that the cabinet is powered down and disconnected from the electrical supply.

1. Raise the front cover and locate the bulbs
2. Remove the power clips at the ends of the bulbs by gently pulling whilst holding the bulb steady
3. Remove the bulbs from the mounting clips and replace with new ones
4. Replace the power clips on the ends of the new bulbs and ensure they are firmly seated
5. Close the front panel
6. Reconnect the cabinet to the electrical supply and test the bulbs for proper operation

5.6 Maintenance/Service Log

It is good practice (and in some cases regulatory requirement) to maintain a log of all maintenance work carried out on your freezer.

Chapter 6–Recertification & Calibration

Ductless fume hood generally require re-certification, when:

- The hood is re-located
- Hood's performance is suspected
- After filter or blower replacement
- At least once a year

During recertification:

- Cabinet airflow velocities and flow patterns are verified against the manufacturer's specifications and relevant international standards
- Filters are scan-tested to ensure they do not leak
- Operator comfort tests may be performed
- If airflow velocities are found to be off set point, adjustments are made as part of the certification process before final values are recorded.

Airflow alarm calibration, when:

- The cause of the airflow alarm cannot be determined
- Re-certification indicates the displayed airflow deviates by >0.02m/s (4fpm) from actual measured velocities.

6.1 Certification Flowchart

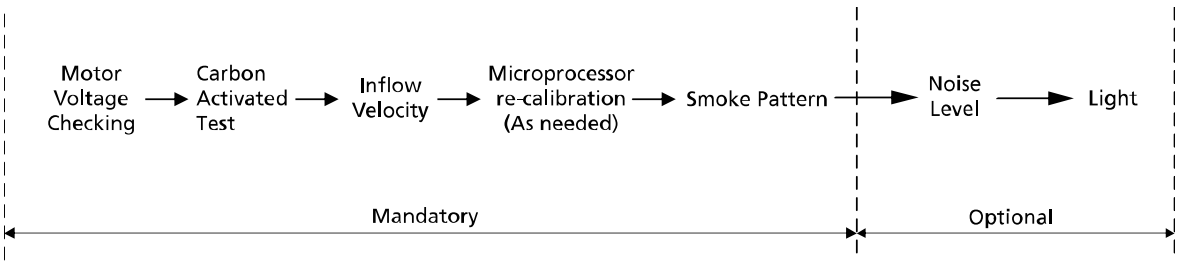

6.2 Airflow Adjustment

The speed controller is located in the electronics panel which is accessed by raising the front engineering access panel at the top of the front of the cabinet and then opening the drop-down cover by removing the two screws on the front left and right sides of the cover.

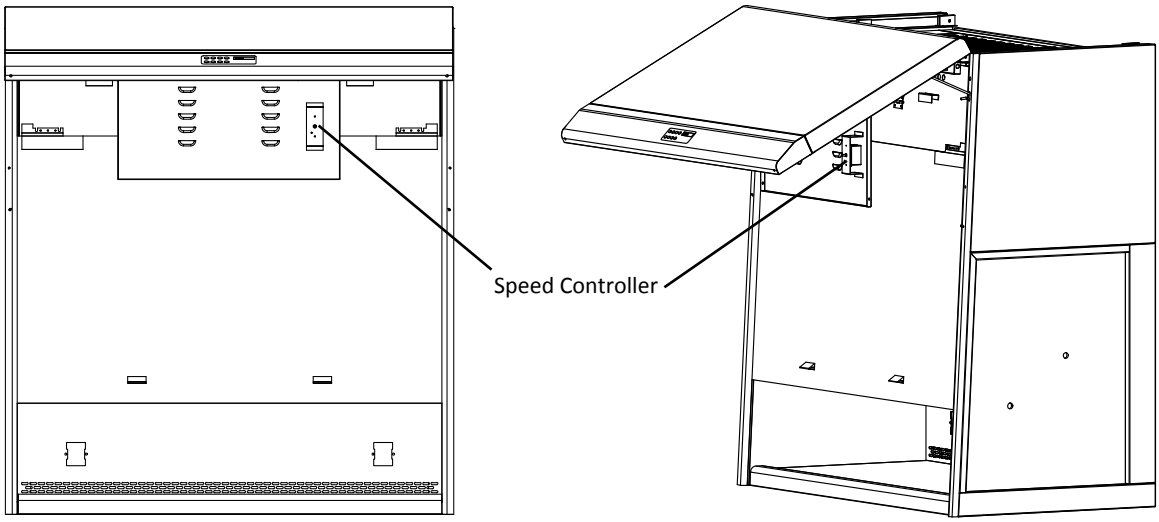

Plug the multimeter probes to the Motor Voltage Sampling Port. Use the multimeter to take the voltage air velocity reading.

Adjust the airflow by adjusting the speed controller. The speed controller may be different for 230V and 115V hood.

6.3 Certification and Calibration

Certification and calibration procedure can be found in the test report.

Chapter 7 – Troubleshooting

This guide addresses the most common service issues. For more trouble shooting or service information contact your local ESCO Distributor.

Hardware:

- DVM (Digital Voltage Meter).
  Note: *An analog meter can be used for troubleshooting, but cannot be used for motor voltage measurement.*
- Phillips screwdriver
- Insulated jumper cables

The ElectricalPanel and Component Layout:

Open the front panel, the electrical panel is the red covered box located on the back of the panel. The component layout is as followed:

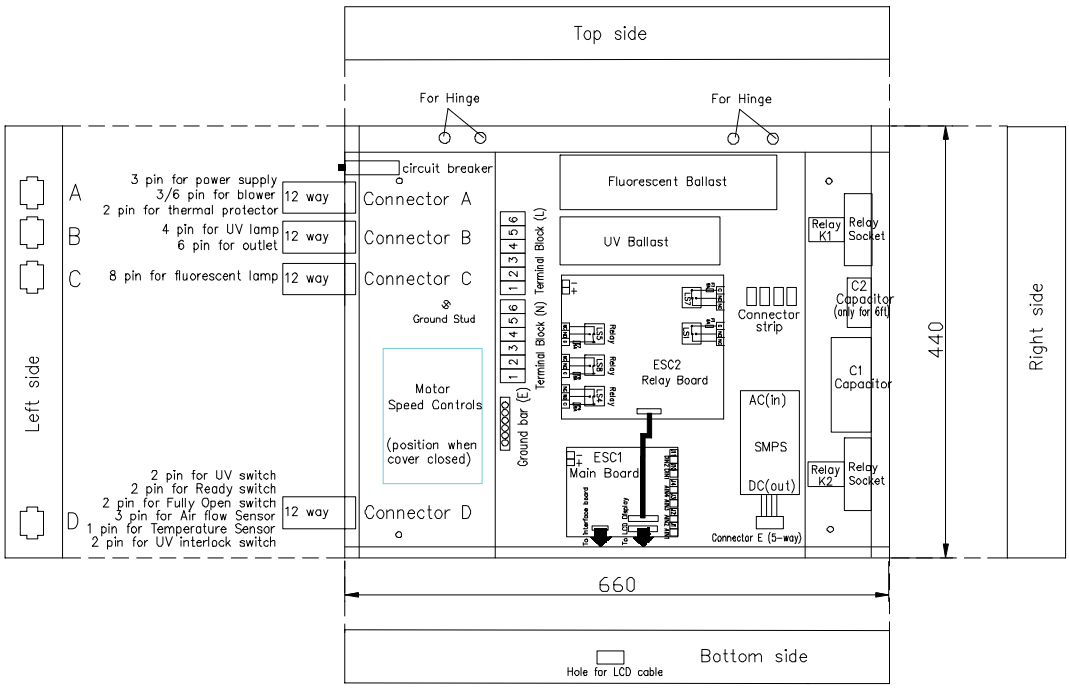

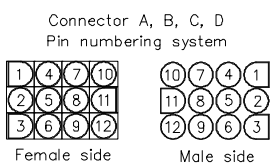

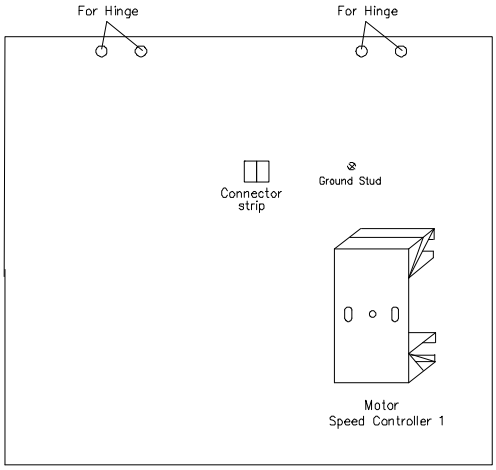

Box Cover

Problem 1: Cabinet does not start (LCD, button, fan light, and socket are inoperative)

Cause	Corrective Action
Power Failure	• Check if there is power at the wall/building electrical socket by using DVM. • Ensure the building socket switch is at ON position.
Power cord is not connected properly or faulty	• Check whether power cord has been connected properly into wall/building socket and the unit. Some cabinets have 2 cords. • Measure the AC voltage between the live and the neutral terminal of the cord by using DVM. • If the voltage is not within ±2% of the wall socket voltage, replace cord; otherwise proceed to next step
Circuit breaker has tripped	• See Component Layout to find circuit breaker. • Check the circuit breaker inside the electrical panel. **NOTE:** *If circuit breaker has tripped, do not reset the breaker before checking all electrical components and wiring connections. (See Figure 1-1).* • Does the cabinet operate correctly after resetting the circuit breaker? If not proceed to next step.
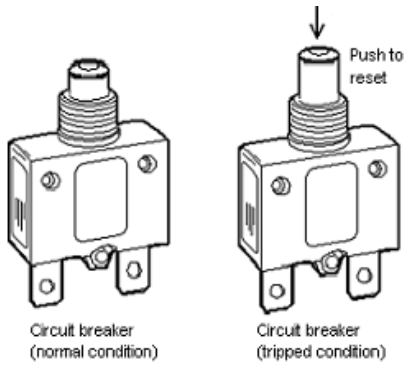 Figure 1-1	
Improper connection	• Ensure cabinet is plugged in to the main supply. • Carefully measure AC voltage between LIVE and NEUTRAL terminal block inside electrical box (See Figure 1-2). • The voltage should be 230VAC ±10% for ADC-__1/3 or 115VAC ±10% for ADC-__2. • If the voltage is out of the range, check cable connection at connector A pin 1 (live) , 2 (neutral) and 3 (ground). Confirm that the voltage is present • See Component Layout to locate connector A and the pin numbering system.
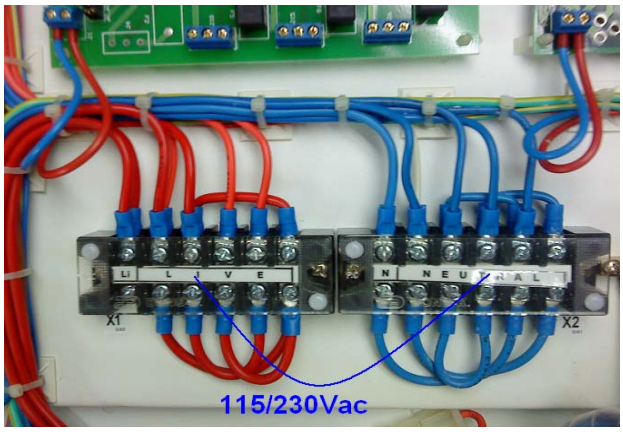 Figure 1-2  Figure 1-3	

Defective power supply (SMPS)	• See Component Layout to locate the SMPS. • Disconnect the 5-pin connector of the SMPS output, measure the DC voltage between Red (pin 1) and White (pin 2) cables on the SMPS side. See Figure 1-4. • The voltage should be in range of +7.5VDC ±10%. • If out of range, please check incoming power to the SMPS Molded cord into SMPS – check terminal where the cord is connected. The input of SMPS should be 230VAC±10% for ADC-__1/3 or 115VAC±10% for ADC-__2. If input is correct but output is not, replace the SMPS.
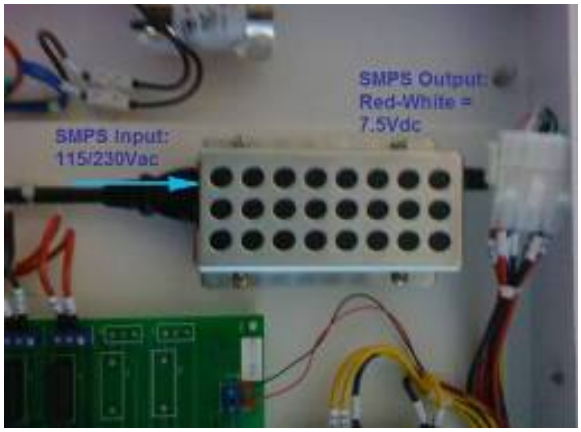 Figure 1-4 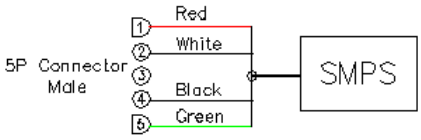 Figure 1-5	
Connection problem to main board	• See Component Layout to locate the main board. • Measure the incoming voltage on the main board at terminal J 13 (Note polarity, blue cable closest to edge is negative -). See Figure 1-6. • Voltage should be between 6.75 – 8.25VDC. • If voltage is out of range, check connection between SMPS and main board. • If voltage is correct, proceed to next step.
 Figure 1-6	
Defective main board	• Restart the cabinet 2 to 4 times. • The main board is defective if the main board incoming supply is between 6.75 – 8.25VDC and: o All LED's on the control panel are off o The LCD is blank o No buzzer sound • If these conditions exist replace the main board, otherwise proceed to next step
 Figure 1-7 ADC Membrane	

Connection problem to relay board	• See Component Layout to locate the relay board. • Measure the incoming voltage on the Relay Board at terminal J 1 (Note polarity, BLUE cable closest to edge is negative -). See Figure 1-8. • Voltage should be between 6.75 – 8.25VDC. • If voltage is out of range, check connection between SMPS and relay board. • If voltage is correct, proceed to next step.
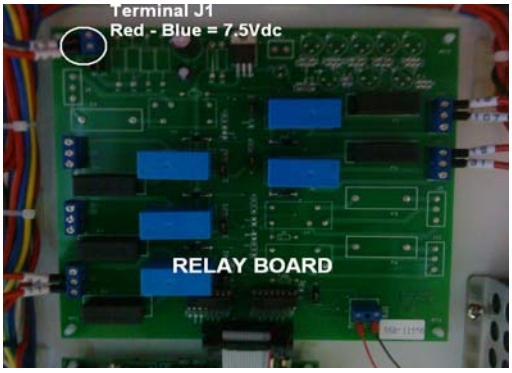 Figure 1-8	
Defective relay board	• Ensure the following are correct: o Main board is operational o Flat Ribbon cable is installed correctly to relay board and main board and shows no physical damage o Relay board has the correct incoming voltage (6.75 – 8.25VDC) o Check all fuses on relay board: Turn off power, remove fuses and physically inspect or check continuity o All wiring connections are good • Turn the cabinet on. If the FAN, LIGHT, SOCKET and cannot be controlled, replace the Relay Board. **NOTE:** *When replacing relay board, please re-connect all the cables back correctly. Any wrong wiring may result in damage.*
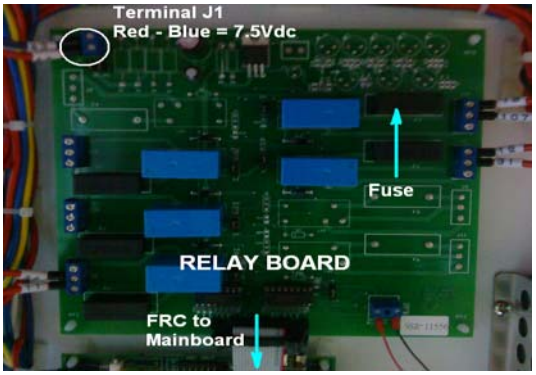 Figure 1-9	

Problem 2: Blower doesn't function

Cause	Corrective Action
Fan is Off	• Switch on the Fan by pressing Fan button on control panel. • Enter the Fan PIN number if required (default is 0001) • The LED for FAN should illuminate and the FAN should start. • If the FAN does not operate, proceed to next step. • If the LED on the membrane does not illuminate, check connection from control panel to main board and LCD, keypad membrane.

Fuse F1 is blown	• Switch off the cabinet. • See Component Layout to locate the relay board. • Check Fuse F1 on relay board. See Figure 2-1 below. • If fuse F1 is blown, as temporary solution, use F5 (spare) to replace F1. • If fuse F1 is okay, proceed to next step.
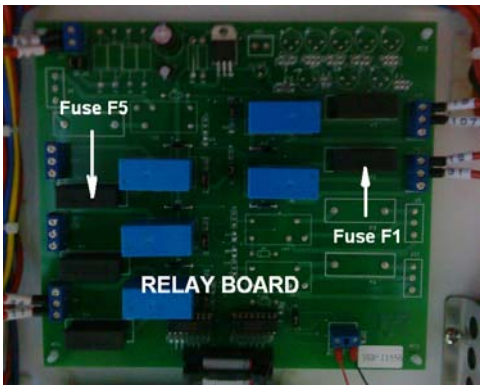 Figure 2-1	
Faulty motor speed controller	• Switch on the blower on the cabinet. • See Component Layout to locate the motor speed controller • Adjust the knob of the speed controller clockwise to speed up the blower, counterclockwise to lower down the blower speed. • If still the blower doesn't work when fully clockwise already, switch off the cabinet and proceed to next steps below. • Add jumper cables between the 2 cables going to the speed control. This is bypassing the speed controller. See Figure 2-2/2-3 below. • Switch on the cabinet. • If the fan operates properly, the speed controller is defective and needs to be replaced. • If the fan does not operate, the problem is not with the speed controller. Please proceed to next step.
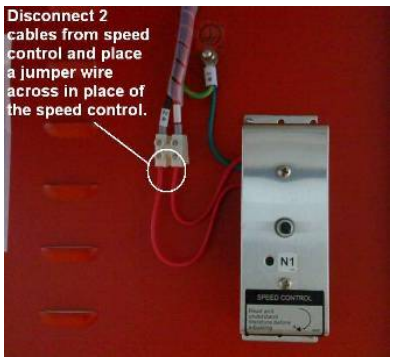 Figure 2-2 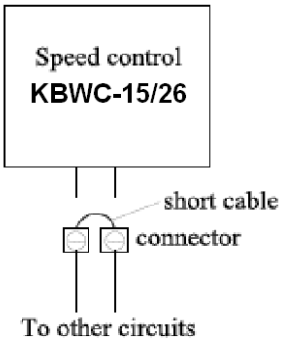 Figure 2-3	
Faulty capacitor	• Switch the unit off. • See Component Layout to locate the capacitor. • See Figure 2-4 below, disconnect two cables of capacitor. • Using a capacitance meter or a DVM set to capacitance measurement. Record the value between two capacitor cables. • If the value is out of given ranges on table 1, replace capacitor. • If the capacitance is within the given ranges proceed to next step. **Warning:** *The capacitor may still have some electrical charges if the cabinet was on prior doing this checking. Wait for 1-2 minutes and check the capacitor voltage using a voltmeter to ensure the capacitor was discharged (voltage less than 5VAC) prior to disconnecting the capacitor.*

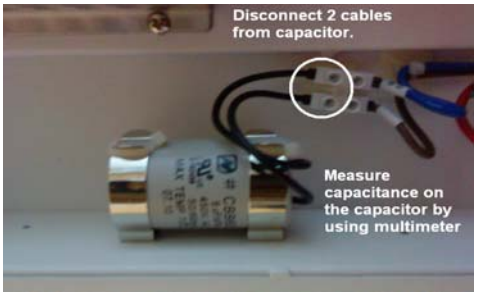

Figure 2-4

Power	50Hz	60Hz
115V AC±10%		18-22µf
230V AC±10%	7.5-8µf	9-11µf

Table 1

Faulty relays	• Turn off the cabinet. • Check LS1 relay on the Relay Board. See Drawing 2-5 below. • Make sure all wiring and connections are correct. • On terminal J 2, check the NO to Common and NC to Common circuits by checking continuity. • If the NO to Common and NC to Common contacts are not correct, replace the Relay Board. • If the NO to Common and NC to Common contacts are correct, proceed to the next step. • Check K1 relay, see drawing Layout A at the end of this section to locate the K1 relay. • With cabinet still switched-off, check if the cables connected to the relay socket are tight. See drawing 2-6 below. • Visually inspect the relay for burnt contacts or flask marks on the inside of the relay case. (Relay is the one with transparent, rectangular, plastic case) • Check NO to Common and NC to common contacts on relay K1. The method is same as for LS1 relay. • If the relay K1 shows signs of arching (burnt marks) or the NO-C and NC-C circuits are not correct, replace the relay.

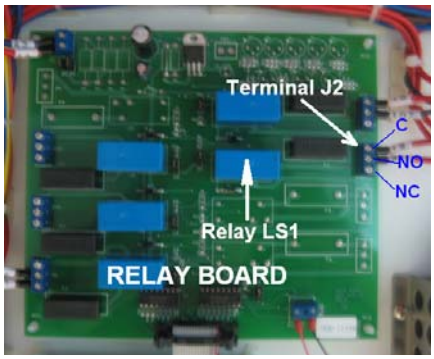

Figure 2-5

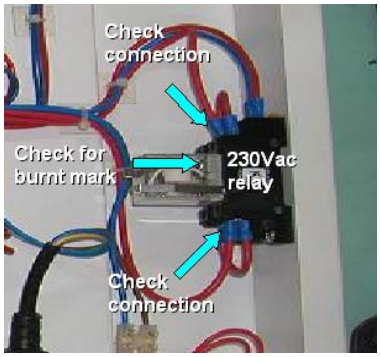

Figure 2-6

Auto-thermal cut-off	• Check the Fan for overheating – The motor has a thermal cut out built-in. • Wait 60 minutes with the FAN turned off and then try to restart. • If the FAN restarts determine why there is excessive heat in the cabinet. • If the FAN does not restart proceed to the next step.
Motor failure	• Check whether the motor can rotate properly and not loosened. • Check for physical damage. • If present, replace the blower.

Problem 3: Airflow Failure (AIRFAIL) – alarm is triggered

Cause	Corrective Action
External air interference	• Ensure that there are no external sources of airflow disturbance like air conditioner vent, window or incidences of door opening or people walking fast near the cabinet. • Locate airflow sensor installed inside the work zone. Ensure there is no air disturbance or obstruction around the sensor. • If there is no external air interference, proceed to next step.
Blocked cabinet grille	• Ensure that the air grilles inside the cabinet are not blocked and that the cabinet is not excessively loaded. • If there is no blockage in air grilles, proceed to next step.
Low building supply voltage (if new cabinet, check this first)	• Turn on the cabinet. • Open electrical box and find motor voltage sampling port as shown on Figure 3-1. • For new cabinet, if the motor voltage is lower than the Nominal Voltage value recorded in factory test report, adjust the speed controller to get output voltage to blower as specified in the Test Report – Test Conditions Documentation Sheet. • For cabinet that has been used for more than 1 year, refer to last motor Nominal Voltage from last certification report or if not available, measure the actual airflow on cabinet and increase motor voltage accordingly to achieve nominal airflow velocity. • If supply voltage is same as Nominal Voltage, proceed to next step.
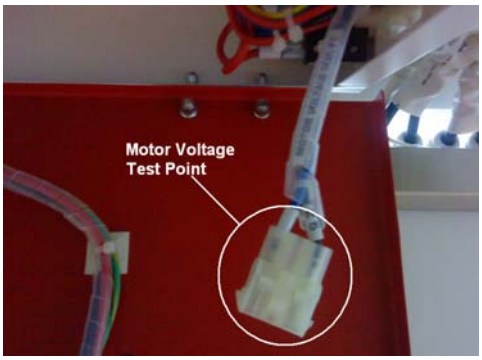 Figure 3-1	
Filter loaded or wrong speed controller setting	• Plug in the voltmeter to the Motor Voltage Sampling Port. • Measure the actual airflow velocity using anemometer or flow hood. If actual airflow is okay but LCD still shows AIRFAIL, proceed to next step. If actual airflow is not okay, please adjust motor speed controller accordingly until alarm is turned off and the LCD shows nominal airflow reading. After this, if LCD still shows AIRFAIL, proceed to next step. • The sensor will take about 2-3 minutes before it can register a new airflow setting. **Note:** *The cabinet must be certified at least annually.* • If the blower is already operating at maximum voltage and the airflow alarm is still triggered due to filter loaded, it's time to change the filter. • If filter is not loaded, proceed to next step.
Faulty/ inaccurate calibration	• Re-calibrate the microprocessor. Follow the calibration procedure in the test report. **Warning:** *To be carried out only by an authorized person.* **CHECKING CALIBRATION DATA** • After calibration is done, go to MENU, key in PIN if required, choose SET MODE, and choose MAINTENANCE. • LCD will blink in MAINTENANCE MODE. • Go to main display by pressing MENU button twice. • Press SET button, LCD will display software version that is currently being used on the cabinet. Example: **C201 V3.0**

	• Press DOWN button until you find below message: - **ADC A/F**: Show actual ADC value from airflow velocity sensor. - **ADC ZERO**: ADC value from airflow velocity sensor when air velocity is zero (set during zero calibration) - **ADC MIN**:ADC value from airflow velocity sensor at airflow failure point (set during sensor calibration). - **ADC MAX**: ADC value from airflow velocity sensor at airflow maximum point (set during sensor calibration). - **ADCTEMP**: ADC value from temperature sensor. - **TEMP** : this is the current ambient temperature read by temperature sensor (in ºC) - **CONSTANT**: this is the airflow sensor constant - **CHM SNSR**: ADC value from chemical sensor. • In order to prevent any AIRFAIL or unstable velocity displayed on LCD problem, please ensure the followings after the calibration done: 1. CONSTANT value is correct. Check it with constant written on sensor body or inside Replaceable Component Record List which come with test report. 2. TEMP shows room temperature. If not, refer to nextpossible cause,part B. 3. ADC ZERO < ADC MIN < ADC MAX. If not please re-do calibration in correct sequence: SET CONSTANT → SET ZERO → CALIB. If CALIBRATION ERROR is encountered, please refer to next possible cause, part A. 4. Just after calibration, ADC A/F value should be somewhere between ADC MIN and ADC MAX. If not, please adjust the speed controller or redo calibration as necessary.
Sensor Failure / Sensor Misalignment	**A. Air Flow Sensor failure / misalignment** • Airflow sensor is located inside the unit and can be accessed from the back. See figure 3-2 below. It is a stainless steel tube with 2 round holes facing up. **Important to check:** 1. Ensure that the sensor area is not blocked at all and that its through-holes are perpendicular to the filter's surface. 2. Exhaust sensor is attached tightly to the mounting plate. 3. There is no gap between sensor box and filter surface. 4. Sensor box is installed tightly to the cabinet. • Turn off the cabinet. • See Component Layout to locate the main board. • Using DVM, check the sensor's output voltage (DC) at channel AIN1(+) and J1(-) on main board (See drawing 3-3 below). • The voltage should increase if motor voltage is increased and decrease if motor voltage is decreased. • If your observation is different, check sensor connection on the unit (see figure 3-6 below) and at connector D pin 9,10,11,12 on electrical box (see Layout at the end of this section) for any bad/loose connection. • If connection is okay but sensor is still not working properly, replace it. • If airflow sensor is working properly, proceed to next step. **B. Temperature Sensor Failure** • Temperature sensor is located close to airflow sensor inside the unit. See figure 3-2. • Using DVM, check the temperature sensor's output voltage (DC) at channel AIN4(-) and J4(+) on main board (See figure 3-3 below). • 0.01VDC should represent one degree Celsius. For example, if output is 0.25VDC, it indicates temperature of 25°C. Tolerance of ±1°C is acceptable. • Replace temperature sensor if the reading is wrong. • If temperature sensor is working properly, proceed to next step.

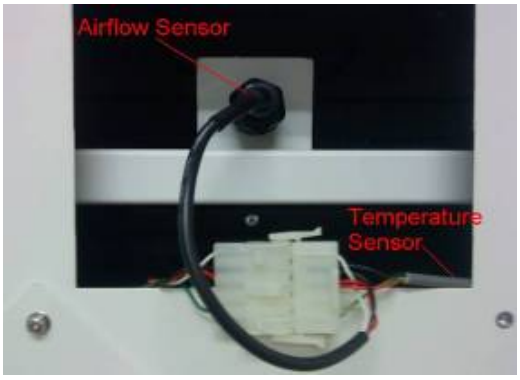

Figure 3-2 Sensor Back Panel Access

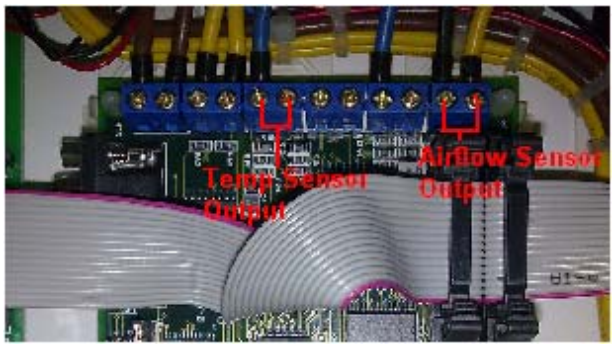

Figure 3-3

Motor failure	• Check the motor. If motor is not running, refer to 'Blower doesn't function' problem. • If motor is working properly, proceed to next step.

Problem 4: Contaminated Lab

Cause	Corrective Action
Low airflow	• Adjust the motor speed controller to get the optimum airflow.
Leaking filters	• Change the filters. • Re-certify the cabinet after the new filter has been installed.

Problem 5: Excessive Fan Noise

Cause	Corrective Action
Resonance	• See Component Layout A or B to locate the motor speed controller. • Increase the motor speed by 5 – 10 VAC. Check whether the noise disappears. If the noise is already gone, measure the actual airflow velocity. o If the velocity is still in the acceptable range, maintain it. o If velocity is out of acceptable range, or if noise persists, go to next step.
Loosed motor or impeller wheel mounting	• Refer to Problem 2 - Faulty Capacitor section, to check the capacitor, and replace if necessary. • Open the blower access panel (see figure 5-1) and check if the blower mounting bolts have been fully tightened. • Also check whether the motor can rotate properly and not loosed (see figure 5-2). • If motor is physically damaged, replace it.

Figure 5-1

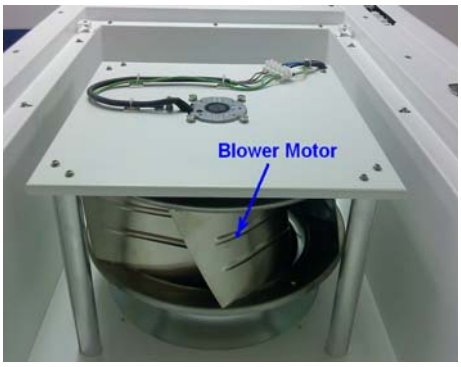

Figure 5-2

Problem 6: Blank LCD

Cause	Corrective Action
Connection problem	• Turn off the cabinet. • See Component Layout to locate the main board. • Check whether LCD FRC (Flat Ribbon Cable) has been inserted properly into its socket on the main board. See Figure 6-1 below.
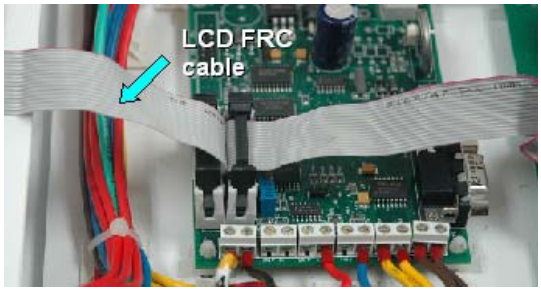 Figure 6-1	
Contrast problem	• Turn off the cabinet. • Adjust the potentiometer on main board by rotating the top metal part using flat screw driver to achieve the best LCD contrast. Counter clock-wise direction will increase the contrast. See Figure 6-2. • If the LCD remains blank, replace it.
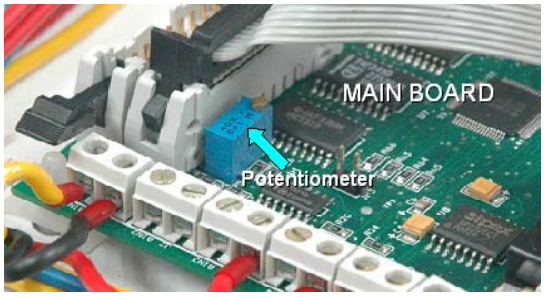 Figure 6-2	
Defective LCD	• Connect a new LCD to the LCD port on main board (See Component Layout). • If the new LCD functions properly, means the old one is Defective. Replace it. • If the new LCD is not working, check its cable and connector interface to the main board. If all connections okay but LCD doesn't function, replace the main board.

Problem 7: Inoperative buttons

Cause	Corrective Action
Connection problem	• Turn off the cabinet. • See Component Layout to locate the main board. • See figure 7-1 and ensure FRC cable going to interface board is connected properly. The triangle sign on the female connector indicates PIN number 1. • Interface board and membrane/keypad are located behind the blue panel, underneath the light metal deflector. • With the cabinet still turned-off, uninstall the fluorescent light and metal deflector to access the interface board. See Figure 7-3. • See Figure 7-2 for the proper connection between main board, interface board, and membrane/keypad. • Check if the green plastic cable from the membrane has been inserted properly into the interface board. Follow Figure 7-4 for the correct orientation of connector.

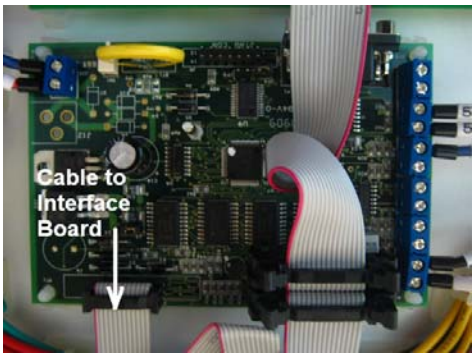

Figure 7-1

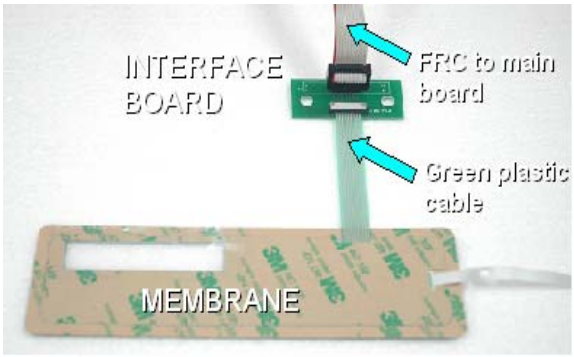

Figure 7-2

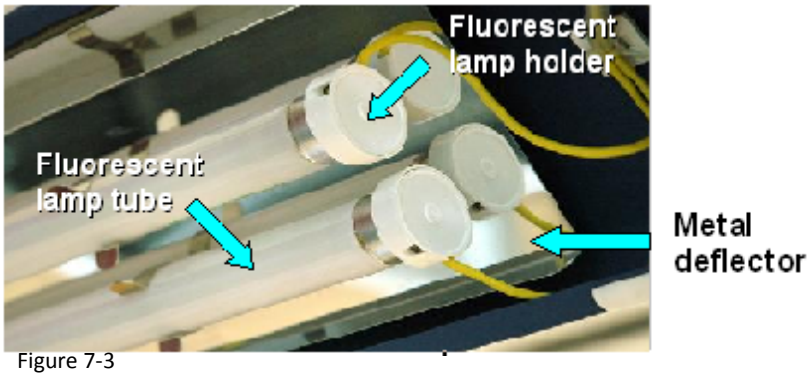

Figure 7-3

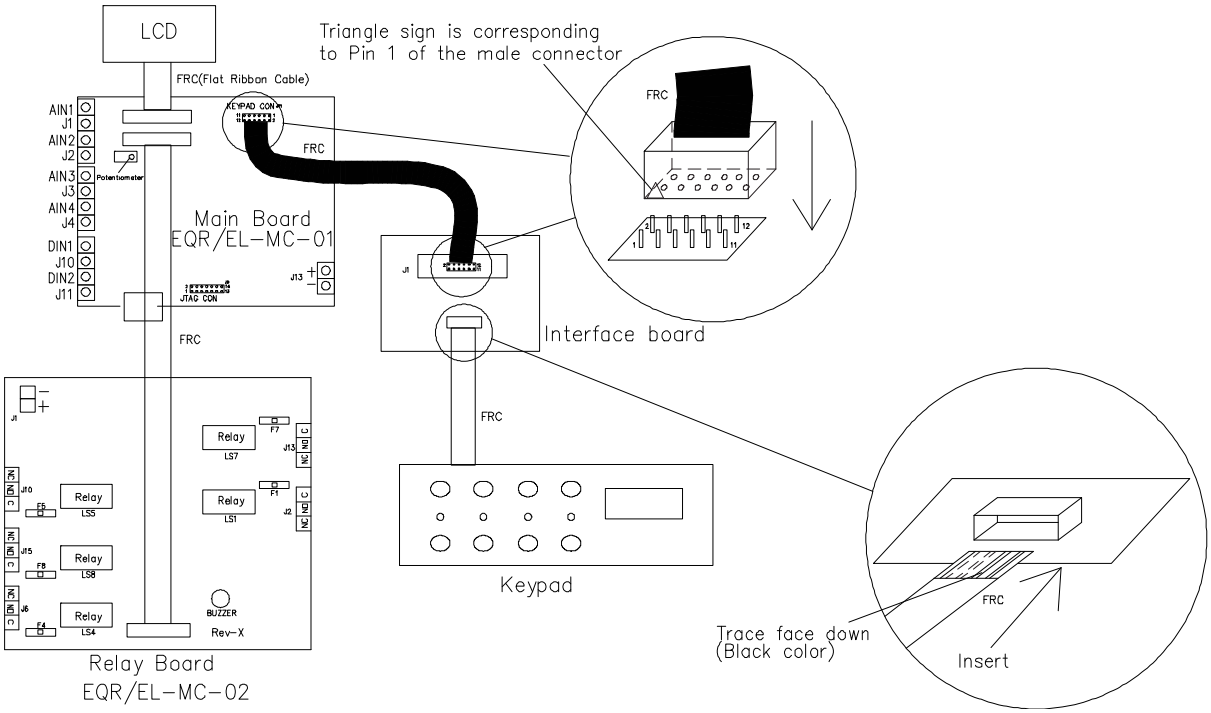

Figure 7-4

Defective Cable and / or Interface Board and / or keypad	• Replace them one by one, to check which one(s) among them is/are Defective. • Replace the Defective part(s).

Problem 8: Light always OFF

Cause	Corrective Action
Sash in SASH ALARM state	• Move the sash to Ready position (normal operating height). • Switch on the light by pressing LIGHT button on the membrane. • Light can only be ON at Ready sash position. • If light cannot be ON when sash at Ready position, proceed to next step.
Faulty fluorescent tube	• Replace the faulty fluorescent tube. • Fluorescent tube is located inside the blue panel.
Faulty Fluorescent ballast	• See Component Layout to locate the fluorescent ballast, connector C, and relay board. • Turn on the cabinetthen the light by pressing LIGHT button on membrane. • Check AC voltage at ballast input (between pin NO on J13 terminal on relay board to neutral), see figure 8-1. • It should be 230VAC±10% for 230V cabinet or 115VAC±10% for 115V cabinet. • If not, check the LS7 relay and F7 fuse (refer to possible cause faulty relay below). • Turn off the unit. • Disconnect male connector C on electrical box. • Turn on the unit. • Turn on the light, then check AC voltage at ballast output (between female connector C pin 1 and 2), it should be around 450-600Vac. • Replace ballast if output voltage is much lower than this range.
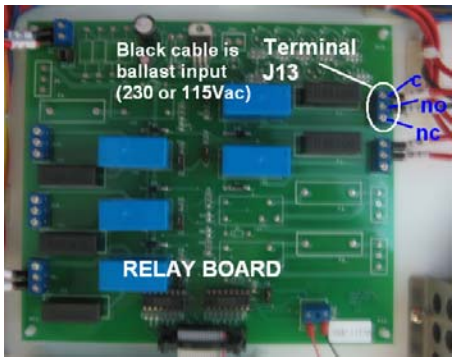 Figure 8-1	
Ready magnetic switch is not connected properly, faulty or misaligned	• Move sash to Ready position. The LCD should show either “FAN OFF” or showing velocity. • If the LCD showing “SASH ALARM” instead, please check position/alignment of the magnetic switches in relation to the magnet. See figure 8-2. • Shift the switch or magnet position so the distance between them is between 10-13mm as explained in. If the distance is too far, the switch may not be able to detect the magnet. • If the LCD still showing “SASH ALARM”, the switch may be faulty (please replace it) or the connection may have problem. For checking on connection, follow next step.
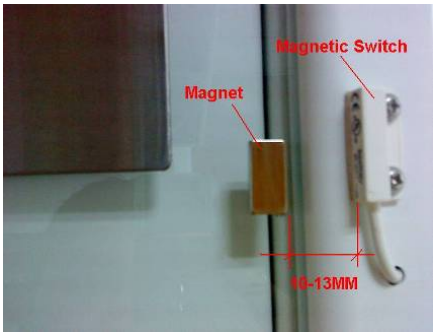 Figure 8-2	

Connection Problem	• Turn off the cabinet. • See Component Layout to locate the relay board, fluorescent ballast, and connector C inside electrical box. • Check for any loose or bad connection between relay board, fluorescent lamp ballast, and female connector C. • See figure 8-1 to locate terminal J 13 on relay board, check tightness of 2 cables connected to J 13. • For connector C, disconnect the male side from electrical box, then check male and female side for any bad connection. • Check also connection of the lamp holder (see figure 8-3).
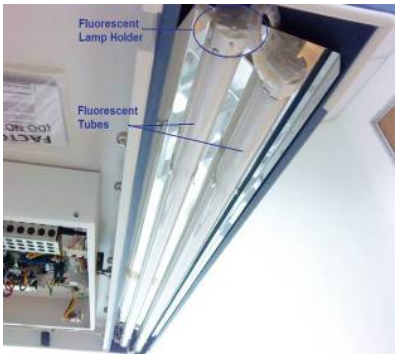 Figure 8-3	
Faulty relay or fuse	• Turn off the cabinet. • See Component Layout to locate the relay board. • Check relay LS7 and fuse F7 on the relay board. See Figure 8-4. • If fuse F7 is blown, replace with F5 (spare). • On terminal J13, check the NO to Common and NC to Common circuits by checking continuity. • If the NO to Common and NC to Common contacts are not correct, replace the Relay Board. • If the NO to Common and NC to Common contacts are correct, proceed to the next step.
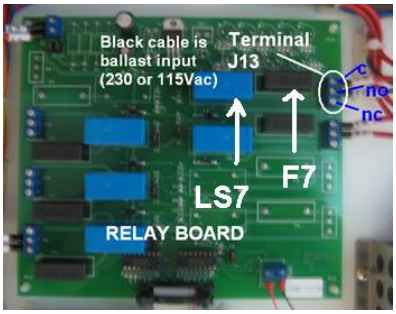 Figure 8-4	

Problem 9: Electrical socket always OFF

Cause	Corrective Action
Connection Problem	• Turn off the cabinet. • See Component Layout to locate the relay board and connector B. • Check any loose or bad connection between relay board and female connector B. • See Figure 9-1 to locate terminal J 6 on relay board, check tightness of 2 cables connected to J 6. • For connector B, disconnect the male side from electrical box, and then check male and female side for any loose or wrong connection. • Check also connection on electrical socket. It is located inside the work zone.

Faulty relay or fuse	• Turn off the cabinet. • See Component Layout to locate the relay board. • Check LS4 relay and fuse F4 on the relay board. See Figure 9-1 below. • If fuse F4 is blown, replace with F5 (spare). • On terminal J 6, check the NO to Common and NC to Common circuits by checking continuity. • If the NO to Common and NC to Common contacts are not correct, replace the Relay Board. • If the NO to Common and NC to Common contacts are correct, proceed to the next step.
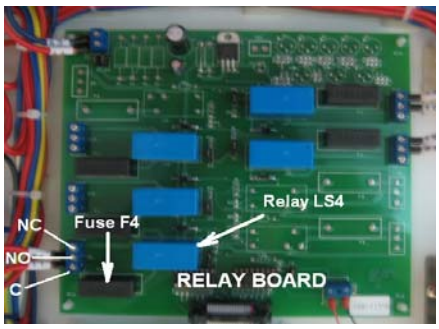 Figure 9-1	
Faulty electrical socket	• Socket is located inside the work zone. • Check electrical socket connection. • If connection is correct but socket has no output, replace electrical socket.

Software Troubleshooting

Error Code	Corrective Action
ERR.MSWITCH	• Magnetic switches are located inside right profile cover. <u>A. Check for faulty Magnetic switch(es):</u> • Turn on the unit. • On control panel, press MENU button and key in ADMIN password (if any). • Choose SET MODE option, and then choose MAINTENANCE. • Press MENU to exit menu. • Press SET button to read diagnostic message. • Press DOWN button until you find below information: *M.Switch_0, it is ON when sash is at normal operating height.* • M.Switch_0 is connected to port J10 on main board (SeeComponent Layout). When M.Switch_0 is activated, port DIN1 and J10 on main board are shorted. • If M.Switch_0 is off, the sash is in a position that would trigger the sash alarm. • Check the actual state of the magnetic switches and observe their corresponding signals on the main board (remove the sash profile to access the magnetic switches). • Replace the faulty switch. <u>B. Check for faulty main board of Sentinel® control:</u> • Turn off the cabinet. • See Component Layout to locate the main board. • Remove the connection from DIN1 and J10 on main board. • Switch on the system. • If the LCD shows “SASH ALARM”, the main board is okay. • If the LCD does not show “SASH ALARM”, the main board is faulty. Replace the faulty main board
ERR.CALIB	• Calibrate the controller. Refer to test report to calibrate.

Chapter 8 – Engineering Details

8.1 Ascent Max ADC-_B_ Series

8.1.1 Engineering Drawing for ADC-2B_

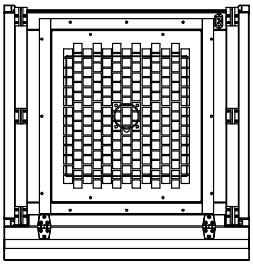

Top View

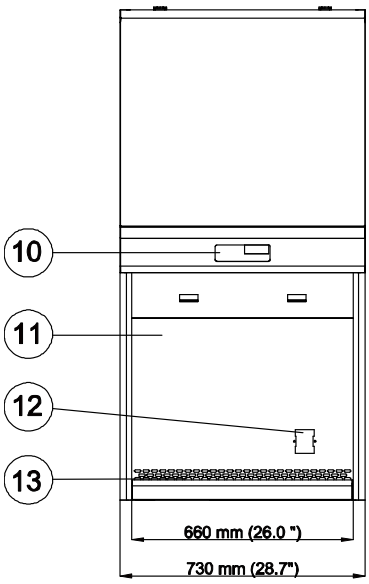

Front View

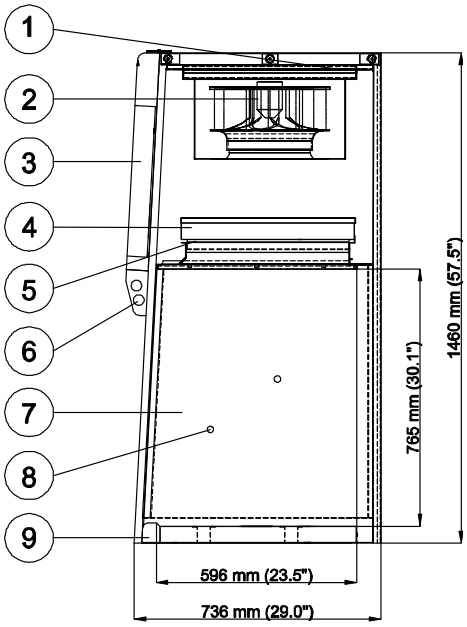

Side View

1. VOC sensor (optional)
2. Blower
3. Electrical/Electronic Panel
4. Carbon Filter(s)
5. Pre-Filter
6. Fluorescent Lamp
7. Tempered Glass Sides
8. Plugged Service Fixture Provision (2 on each side)
9. Stainless Steel Worktop
10. Esco Sentinel Microprocessor Control
11. Tempered Glass Sliding Sash Window
12. Electrical Outlet Kit Provision
13. AutoPurge Slots

8.1.2 Engineering Drawing for ADC-3B_, ADC-4B_, ADC-5B_ and ADC-6B_

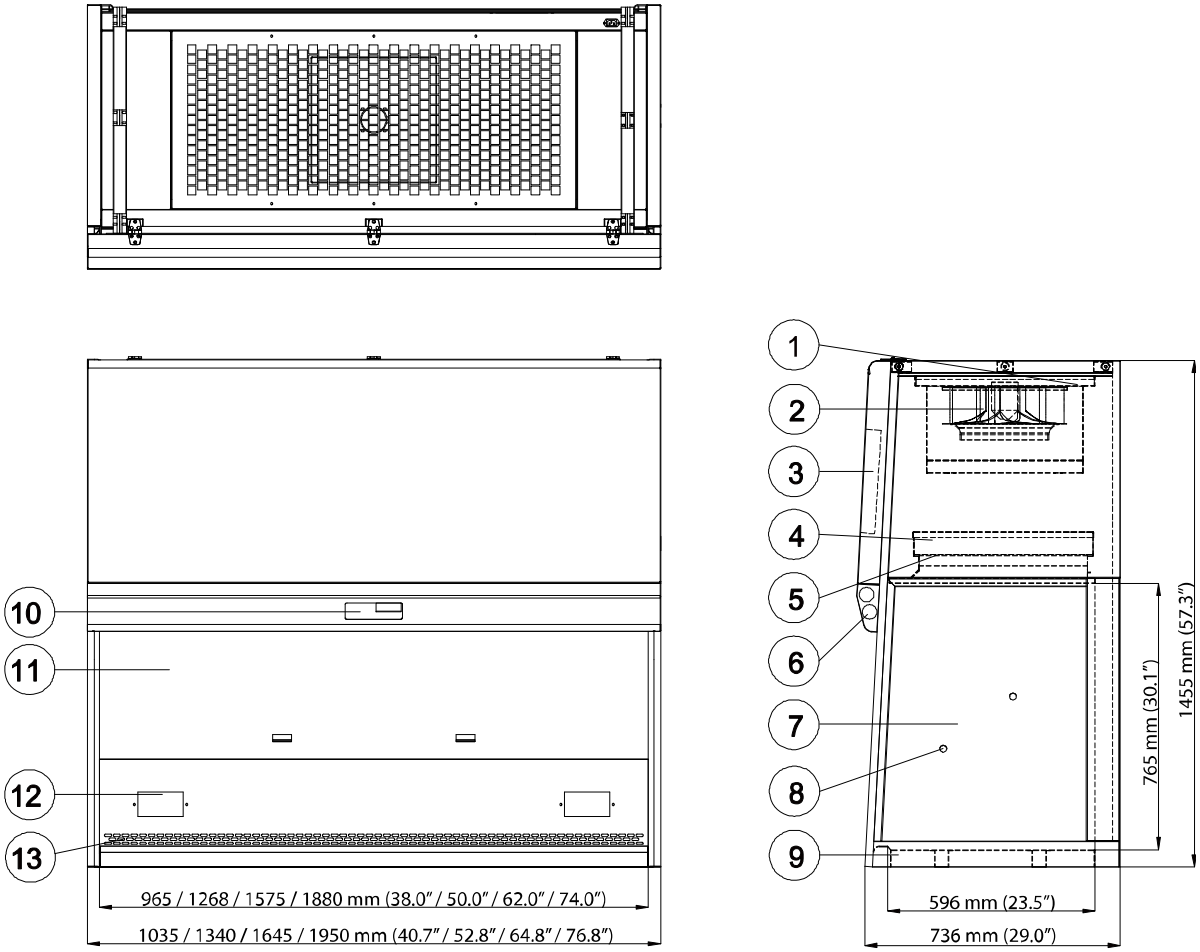

1. VOC sensor (optional)
2. Blower
3. Electrical/Electronic Panel
4. Carbon Filter(s)
5. Pre-Filter
6. Fluorescent Lamp
7. Tempered Glass Sides
8. Plugged Service Fixture Provision (2 on each side)
9. Stainless Steel Worktop
10. Esco Sentinel Microprocessor Control
11. Tempered Glass Sliding Sash Window
12. Electrical Outlet Kit Provision
13. AutoPurge Slots

8.1.3 General Specification

		ADC-2B_	ADC-3B_	ADC-4B_	ADC-5B_	ADC-6B_
External Dimension (W x D x H)		730 x 736 x 1460 mm 28.7” x 29.0” x 57.5”	1035 x 736 x 1455 mm 40.7” x 29.0” x 57.3”	1340 x 736 x 1455 mm 52.8” x 29.0” x 57.3”	1645 x 736 x 1455 mm 64.8” x 29.0” x 57.3”	1950 x 736 x 1455 mm 76.8” x 29.0” x 57.3”
Internal Work Area (W x D x H)		660 x 596 x 765 mm 26.0” x 23.5” x 30.1”	965 x 596 x 765 mm 38.0” x 23.5” x 30.1”	1268 x 596 x 765 mm 50.0” x 23.5” x 30.1”	1575 x 596 x 765 mm 62.0” x 23.5” x 30.1”	1880 x 596 x 765 mm 74.0” x 23.5” x 30.1”
Standard Filter	Pre-Filter	Disposable, non-washable polyester fiber, 85% arrestance, EU3 rated				
	Main Filter	Activated carbon with granular media bed (7 different filter types available, codes A to G)				
Total Weight of Carbon in the Main Filter		8.5 kg (18.7 lbs.)	2 x (10.3 kg) each 2 x (22.7 lbs.) each	2 x (13.9 kg) each 2 x (30.6 lbs.) each	2 x (17.4 kg) each 2 x (38.3 lbs.) each	3 x (13.9 kg) each 3 x (30.6 lbs.) each
Inflow Air Velocity		Initial set point: 0.40 m/s or 80 fpm				
Air Volume		238 m^3/h (140 cfm)	347 m^3/h (205 cfm)	457 m^3/h (269 cfm)	567 m^3/h (334 cfm)	677 m^3/h (399 cfm)
Sound Emission		55 dBA	55 dBA	57 dBA	58 dBA	58 dBA
Light Intensity		>1000 Lux (>93 foot-candles)				
Construction Material	Main Body	1.2 mm (0.05") 18 gauge electro-galvanized steel with white oven-baked epoxy-polyester Isocide antimicrobial powder coated finish				
	Side Wall	Tempered glass				
	Work Top	1.5 mm (0.06") 16 gauge stainless steel, type 304, with 4B finish				
Electrical (220-240 V AC, 50Hz, 1Φ)		ADC-2B1	ADC-3B1	ADC-4B1	ADC-5B1	ADC-6B1
	Max Power	180 W	350 W	350 W	550 W	550 W
	Outlet Amp	5 A	5 A	5 A	5 A	5 A
	FLA	7 A	7 A	7 A	8 A	8 A
	BTU/Hr	714	805	900	1122	1156
Electrical (110-120 V AC, 50Hz, 1Φ)		ADC-2B2	ADC-3B2	ADC-4B2	ADC-5B2	ADC-6B2
	Max Power	350 W	350 W	385 W	450 W	500 W
	Outlet Amp	5 A	5 A	5 A	5 A	5 A
	FLA	8.5 A	8.5 A	8.5 A	9 A	9 A
	BTU/Hr	714	812	785	918	1020
Electrical (220-240 V AC, 60Hz, 1Φ)		ADC-2B3	ADC-3B3	ADC-4B3	ADC-5B3	ADC-6B3
	Max Power	350 W	350 W	350 W	550 W	550 W
	Outlet Amp	5 A	5 A	5 A	5 A	5 A
	FLA	7 A	7 A	7 A	8 A	8 A
	BTU/Hr	714	714	1217	1122	1122
Net Weight		130 kg (286 lbs.)	175 kg (386 lbs.)	225 kg (496 lbs.)	245 kg (540 lbs.)	293 kg (646 lbs.)
Shipping Weight		150 kg (331 lbs.)	205 kg (452 lbs.)	261 kg (575 lbs.)	300 kg (661 lbs.)	339 kg (747 lbs.)
Shipping Dimension		800 x 820 x 1750 mm 31.5" x 32.3"x 68.9"	1130 x 840 x 1750 mm 44.5" x 33.0" x 68.9"	1410 x 840 x 1750 mm 55.5" x 33.0" x 68.9"	1730 x 840 x 1750 mm 68.1" x 33.0" x 68.9"	2050 x 840 x 1750 mm 80.7" x 33.0" x 68.9"
Shipping Volume		1.58 m^3(55.6 cu.ft)	1.66 m^3(58.6 cu.ft)	2.07 m^3(73.1 cu.ft)	2.51 m^3(88.6 cu.ft)	3.01 m^3(106.3 cu.ft)

Code	Name	Application
A	Standard	All common laboratory chemicals, especially with organics. When no specific requirements are present, or when more than one type of chemical is used.
B	Acid	Applications involving sulphur dioxide, hydrofluoric acid fumes. Removes inorganic/organic acid vapors and fumes.
C	Mercury	Highly effective for removal of mercury vapor and compounds. (Stable, non-volatile mercuric sulphide filter media).
D	Sulphur	Removal of sulphur compounds.
E	Halogen	Removal of halogen compounds like Chlorine, Fluorine, Iodine, Bromine, Astatine etc.
F	Aldehyde	Formaldehyde applications or when aldehydes are present. Hospital pathology and endoscopy applications.
G	Ammonia/Amines	High performance removal of ammonia/amines by chemisorption.

8.2 Ascent Max ADC-_C_ Series

8.2.1 Engineering Drawing

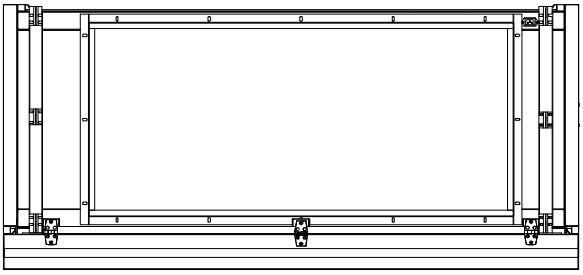

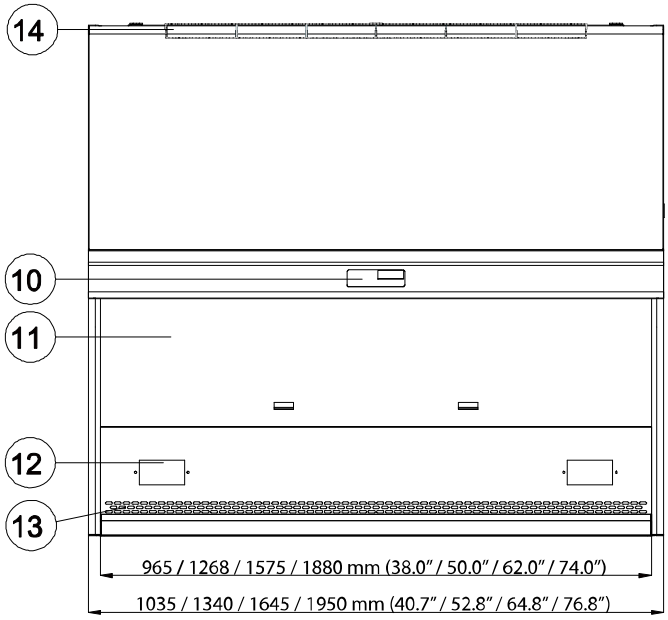

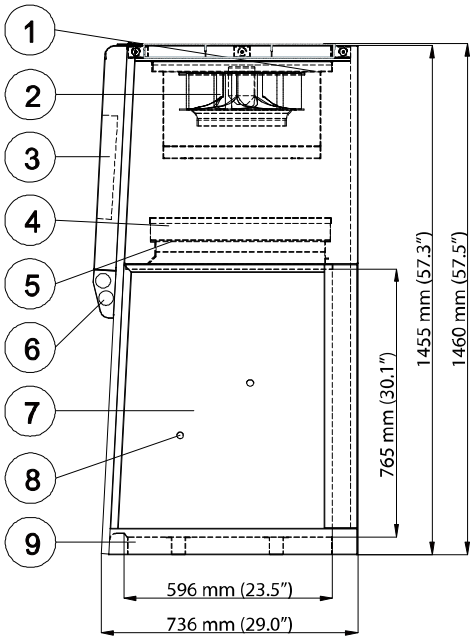

1. VOC sensor (optional)
2. Blower
3. Electrical/Electronic Panel
4. Carbon Filter(s)
5. Pre-Filter
6. Fluorescent Lamp
7. Tempered Glass Sides
8. Plugged Service Fixture Provision (2 on each side)
9. Stainless Steel Worktop
10. Esco Sentinel Microprocessor Control
11. Tempered Glass Sliding Sash Window
12. Electrical Outlet Kit Provision
13. AutoPurge Slots
14. Secondary Backup Carbon Filter

8.2.2 General Specification

		ADC-3C_	ADC-4C_	ADC-5C_	ADC-6C_
External Dimension (W x D x H)		1035 x 736 x 1460 mm 40.7” x 29.0” x 57.5”	1340 x 736 x 1460 mm 52.8” x 29.0” x 57.5”	1645 x 736 x 1460 mm 64.8” x 29.0” x 57.5”	1950 x 736 x 1460 mm 76.8” x 29.0” x 57.5”
Internal Work Area (W x D x H)		965 x 596 x 765 mm 38.0” x 23.5” x 30.1”	1268 x 596 x 765 mm 50.0” x 23.5” x 30.1”	1575 x 596 x 765 mm 62.0” x 23.5” x 30.1”	1880 x 596 x 765 mm 74.0” x 23.5” x 30.1”
Standard Filter	Pre-Filter	Disposable, non-washable polyester fiber, 85% arrestance, EU3 rated			
	Main Filter	Activated carbon with granular media bed (7 different filter types available, codes A to G)			
	Backup Filter	Activated carbon with granular media bed (7 different filter types available, codes A to G)			
Total Weight of Carbon in the Main Filter		2 x (10.3 kg) each 2 x (22.7 lbs.) each	2 x (13.9 kg) each 2 x (30.6 lbs.) each	2 x (17.4 kg) each 2 x (38.3 lbs.) each	3 x (13.9 kg) each 3 x (30.6 lbs.) each
Inflow Air Velocity		Initial set point: 0.40 m/s or 80 fpm			
Air Volume		347 m^3/h (205 cfm)	457 m^3/h (269 cfm)	567 m^3/h (334 cfm)	677 m^3/h (399 cfm)
Sound Emission		60 dB A	61 dB A	60 dB A	62 dB A
Light Intensity		>1141 Lux (>106 foot-candles)	>1397 Lux (>130 foot-candles)	>1060 Lux (>99 foot-candles)	>1116 Lux (>104 foot-candles)
Construction Material	Main Body	1.2 mm (0.05") 18 gauge electro-galvanized steel with white oven-baked epoxy-polyester Isocide antimicrobial powder coated finish			
	Side Wall	Tempered glass			
	Work Top	1.5 mm (0.06") 16 gauge stainless steel, type 304, with 4B finish			
Electrical (220-240 V AC, 50Hz, 1Φ)		ADC-3C1	ADC-4C1	ADC-5C1	ADC-6C1
	Max Power	350 W	350 W	550 W	550 W
	Outlet Amp	5 A	5 A	5 A	5 A
	FLA	7 A	7 A	8 A	8 A
	BTU/Hr	714	714	1122	1122
Electrical (110-120 V AC, 50Hz, 1Φ)		ADC-3C2	ADC-4C2	ADC-5C2	ADC-6C2
	Max Power	350 W	385 W	450 W	500 W
	Outlet Amp	5 A	5 A	5 A	5 A
	FLA	8.5 A	8.5 A	9 A	9 A
	BTU/Hr	714	785	918	1020
Electrical (220-240 V AC, 60Hz, 1Φ)		ADC-3C3	ADC-4C3	ADC-5C3	ADC-6C3
	Max Power	350 W	350 W	550 W	550 W
	Outlet Amp	5 A	5 A	5 A	5 A
	FLA	7 A	7 A	8 A	8 A
	BTU/Hr	714	714	1122	1122
Net Weight		175 kg (386 lbs.)	225 kg (496 lbs.)	245 kg (540 lbs.)	293 kg (646 lbs.)
Shipping Weight		205 kg (452 lbs.)	261 kg (575 lbs.)	300 kg (661 lbs.)	339 kg (747 lbs.)
Shipping Dimension		1130 x 840 x 1750 mm 44.5" x 33.0" x 68.9"	1410 x 840 x 1750 mm 55.5" x 33.0" x 68.9"	1730 x 840 x 1750 mm 68.1" x 33.0" x 68.9"	2050 x 840 x 1750 mm 80.7" x 33.0" x 68.9"
Shipping Volume		1.66 m^3(58.6 cu.ft)	2.07 m^3(73.1 cu.ft)	2.51 m^3(88.6 cu.ft)	3.01 m^3(106.3 cu.ft)

Code	Name	Application
A	Standard	All common laboratory chemicals, especially with organics. When no specific requirements are present, or when more than one type of chemical is used.
B	Acid	Applications involving sulphur dioxide, hydrofluoric acid fumes. Removes inorganic/organic acid vapors and fumes.
C	Mercury	Highly effective for removal of mercury vapor and compounds. (Stable, non-volatile mercuric sulphide filter media).
D	Sulphur	Removal of sulphur compounds.
E	Halogen	Removal of halogen compounds like Chlorine, Fluorine, Iodine, Bromine, Astatine etc.
F	Aldehyde	Formaldehyde applications or when aldehydes are present. Hospital pathology and endoscopy applications.
G	Ammonia/Amines	High performance removal of ammonia/amines by chemisorption.

8.3 Ascent Max ADC-_D_ Series

8.3.1 Engineering Drawing

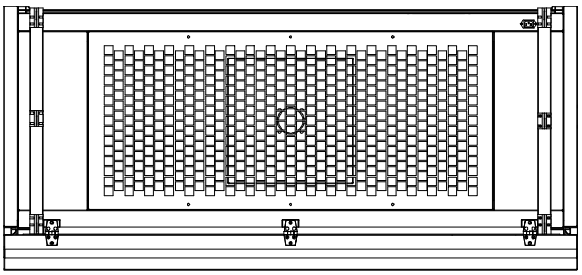

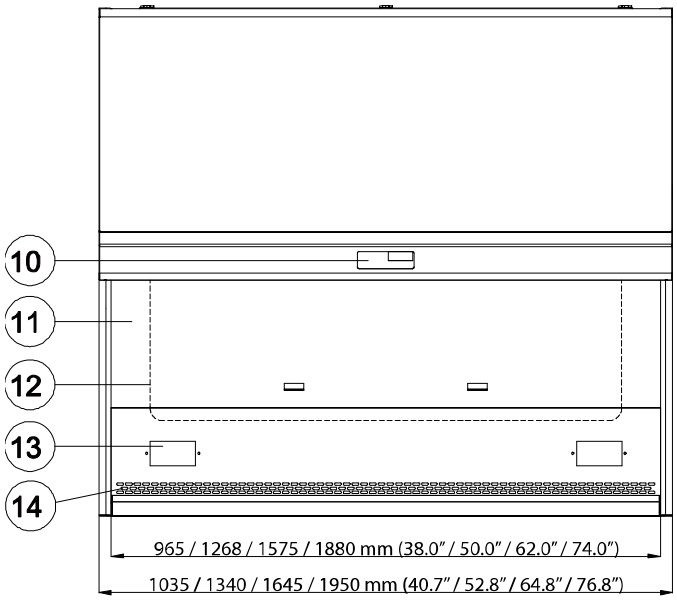

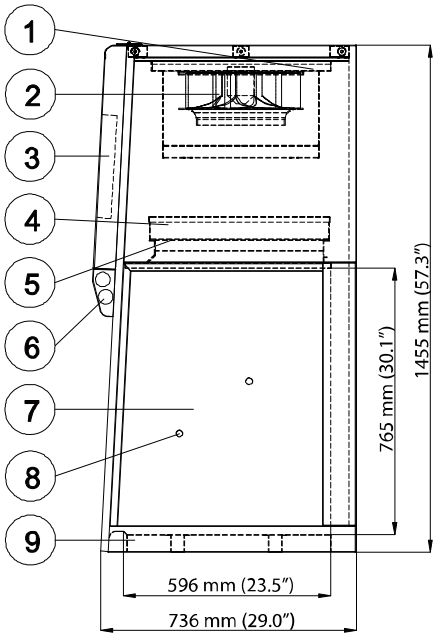

1. VOC sensor (optional)
2. Blower
3. Electrical/Electronic Panel
4. Carbon Filter(s)
5. Pre-Filter
6. Fluorescent Lamp
7. Tempered Glass Sides
8. Plugged Service Fixture Provision (2 on each side)
9. Stainless Steel Worktop
10. Esco Sentinel Microprocessor Control
11. Tempered Glass Sliding Sash Window
12. Tempered Glass Back Wall
13. Electrical Outlet Kit Provision
14. AutoPurge Slots

8.3.2 General Specification

		ADC-3D_	ADC-4D_	ADC-5D_	ADC-6D_
External Dimension (W x D x H)		1035 x 736 x 1455 mm 40.7” x 29.0” x 57.3”	1340 x 736 x 1455 mm 52.8” x 29.0” x 57.3”	1645 x 736 x 1455 mm 64.8” x 29.0” x 57.3”	1950 x 736 x 1455 mm 76.8” x 29.0” x 57.3”
Internal Work Area (W x D x H)		965 x 596 x 765 mm 38.0” x 23.5” x 30.1”	1268 x 596 x 765 mm 50.0” x 23.5” x 30.1”	1575 x 596 x 765 mm 62.0” x 23.5” x 30.1”	1880 x 596 x 765 mm 74.0” x 23.5” x 30.1”
Standard Filter	Pre-Filter	Disposable, non-washable polyester fiber, 85% arrestance, EU3 rated			
	Main Filter	Activated carbon with granular media bed (7 different filter types available, codes A to G)			
Total Weight of Carbon in the Main Filter		2 x (10.3 kg) each 2 x (22.7 lbs.) each	2 x (13.9 kg) each 2 x (30.6 lbs.) each	2 x (17.4 kg) each 2 x (38.3 lbs.) each	3 x (13.9 kg) each 3 x (30.6 lbs.) each
Inflow Air Velocity		Initial set point: 0.40 m/s or 80 fpm			
Air Volume		347 m^3/h (205 cfm)	457 m^3/h (269 cfm)	567 m^3/h (334 cfm)	677 m^3/h (399 cfm)
Sound Emission		55 dB A	57 dB A	58 dB A	58 dB A
Light Intensity		>1000 Lux (>93 foot-candles)			
Construction Material	Main Body	1.2 mm (0.05") 18 gauge electro-galvanized steel with white oven-baked epoxy-polyester Isocide antimicrobial powder coated finish			
	Back Wall	Tempered glass			
	Side Wall	Tempered glass			
	Work Top	1.5 mm (0.06") 16 gauge stainless steel, type 304, with 4B finish			
Electrical (220-240 V AC, 50Hz, 1Φ)		ADC-3D1	ADC-4D1	ADC-5D1	ADC-6D1
	Max Power	350 W	350 W	550 W	550 W
	Outlet Amp	5 A	5 A	5 A	5 A
	FLA	7 A	7 A	8 A	8 A
	BTU/Hr	805	900	1122	1156
Electrical (110-120 V AC, 50Hz, 1Φ)		ADC-3D2	ADC-4D2	ADC-5D2	ADC-6D2
	Max Power	350 W	385 W	450 W	500 W
	Outlet Amp	5 A	5 A	5 A	5 A
	FLA	8.5 A	8.5 A	9 A	9 A
	BTU/Hr	812	785	918	1020
Electrical (220-240 V AC, 60Hz, 1Φ)		ADC-3D3	ADC-4D3	ADC-5D3	ADC-6D3
	Max Power	350 W	350 W	550 W	550 W
	Outlet Amp	5 A	5 A	5 A	5 A
	FLA	7 A	7 A	8 A	8 A
	BTU/Hr	714	1217	1122	1122
Net Weight		175 kg (386 lbs.)	225 kg (496 lbs.)	245 kg (540 lbs.)	293 kg (646 lbs.)
Shipping Weight		205 kg (452 lbs.)	261 kg (575 lbs.)	300 kg (661 lbs.)	339 kg (747 lbs.)
Shipping Dimension		1130 x 840 x 1750 mm 44.5" x 33.0" x 68.9"	1410 x 840 x 1750 mm 55.5" x 33.0" x 68.9"	1730 x 840 x 1750 mm 68.1" x 33.0" x 68.9"	2050 x 840 x 1750 mm 80.7" x 33.0" x 68.9"
Shipping Volume		1.66 m^3(58.6 cu.ft)	2.07 m^3(73.1 cu.ft)	2.51 m^3(88.6 cu.ft)	3.01 m^3(106.3 cu.ft)

Code	Name	Application
A	Standard	All common laboratory chemicals, especially with organics. When no specific requirements are present, or when more than one type of chemical is used.
B	Acid	Applications involving sulphur dioxide, hydrofluoric acid fumes. Removes inorganic/organic acid vapors and fumes.
C	Mercury	Highly effective for removal of mercury vapor and compounds. (Stable, non-volatile mercuric sulphide filter media).
D	Sulphur	Removal of sulphur compounds.
E	Halogen	Removal of halogen compounds like Chlorine, Fluorine, Iodine, Bromine, Astatine etc.
F	Aldehyde	Formaldehyde applications or when aldehydes are present. Hospital pathology and endoscopy applications.
G	Ammonia/Amines	High performance removal of ammonia/amines by chemisorption.

8.4 Ascent Max ADC-_E_ Series

8.4.1 Engineering Drawing

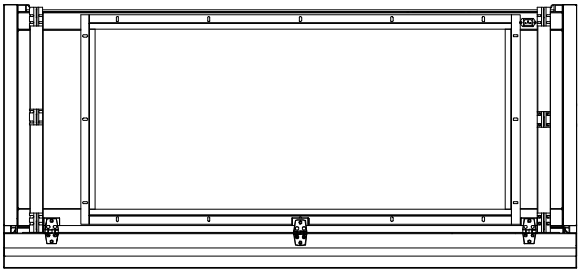

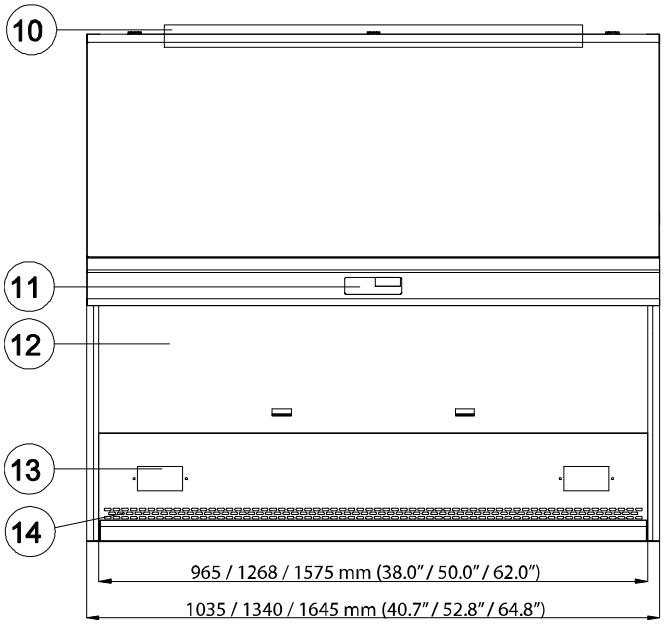

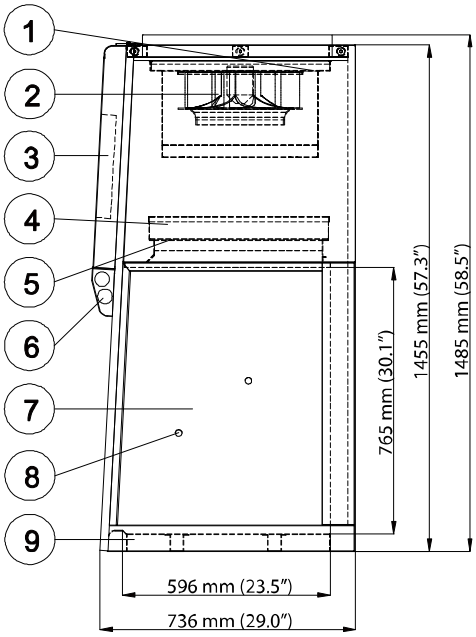

1. VOC sensor (optional)
2. Blower
3. Electrical/Electronic Panel
4. Carbon Filter(s)
5. Pre-Filter
6. Fluorescent Lamp
7. Tempered Glass Sides
8. Plugged Service Fixture Provision (2 on each side)
9. Stainless Steel Worktop
10. Secondary Backup HEPA Filter
11. Esco Sentinel Microprocessor Control
12. Tempered Glass Sliding Sash Window
13. Electrical Outlet Kit Provision
14. AutoPurge Slots

8.4.2 General Specification

		ADC-3E_	ADC-4E_	ADC-5E_
External Dimension (W x D x H)		1035 x 736 x 1485 mm 40.7” x 29.0” x 58.5”	1340 x 736 x 1485 mm 52.8” x 29.0” x 58.5”	1645 x 736 x 1485 mm 64.8” x 29.0” x 58.5”
Internal Work Area (W x D x H)		965 x 596 x 765 mm 38.0” x 23.5” x 30.1”	1268 x 596 x 765 mm 50.0” x 23.5” x 30.1”	1575 x 596 x 765 mm 62.0” x 23.5” x 30.1”
Standard Filter	Pre-Filter	Disposable, non-washable polyester fiber, 85% arrestance, EU3 rated		
	Main Filter	Activated carbon with granular media bed (7 different filter types available, codes A to G)		
	Backup Filter	HEPA filter, typical efficiency of >99.99% at 0.3 microns, removes particulates and aerosols		
Total Weight of Carbon in the Main Filter		2 x (10.3 kg) each 2 x (22.7 lbs.) each	2 x (13.9 kg) each 2 x (30.6 lbs.) each	2 x (17.4 kg) each 2 x (38.3 lbs.) each
Inflow Air Velocity		Initial set point: 0.40 m/s or 80 fpm		
Air Volume		347 m^3/h (205 cfm)	457 m^3/h (269 cfm)	567 m^3/h (334 cfm)
Sound Emission		61 dB A	62 dB A	62 dB A
Light Intensity		>1115 Lux (>104 foot-candles)	>1107 Lux (>103 foot-candles)	>1082 Lux (>99 foot-candles)
Construction Material	Main Body	1.2 mm (0.05") 18 gauge electro-galvanized steel with white oven-baked epoxy-polyester Isocide antimicrobial powder coated finish		
	Side Wall	Tempered glass		
	Work Top	1.5 mm (0.06") 16 gauge stainless steel, type 304, with 4B finish		
Electrical (220-240 V AC, 50Hz, 1Φ)		ADC-3E1	ADC-4E1	ADC-5D1
	Max Power	350 W	350 W	550 W
	Outlet Amp	5 A	5 A	5 A
	FLA	7 A	7 A	8 A
	BTU/Hr	714	714	1122
Electrical (110-120 V AC, 50Hz, 1Φ)		ADC-3E2	ADC-4E2	ADC-5D2
	Max Power	350 W	385 W	450 W
	Outlet Amp	5 A	5 A	5 A
	FLA	8.5 A	8.5 A	9 A
	BTU/Hr	714	785	918
Electrical (220-240 V AC, 60Hz, 1Φ)		ADC-3E3	ADC-4E3	ADC-5D3
	Max Power	350 W	350 W	550 W
	Outlet Amp	5 A	5 A	5 A
	FLA	7 A	7 A	8 A
	BTU/Hr	714	714	1122
Net Weight		175 kg (386 lbs.)	225 kg (496 lbs.)	245 kg (540 lbs.)
Shipping Weight		205 kg (452 lbs.)	261 kg (575 lbs.)	300 kg (661 lbs.)
Shipping Dimension		1130 x 840 x 1750 mm 44.5" x 33.0" x 68.9"	1410 x 840 x 1750 mm 55.5" x 33.0" x 68.9"	1730 x 840 x 1750 mm 68.1" x 33.0" x 68.9"
Shipping Volume		1.66 m^3(58.6 cu.ft)	2.07 m^3(73.1 cu.ft)	2.51 m^3(88.6 cu.ft)

Code	Name	Application
A	Standard	All common laboratory chemicals, especially with organics. When no specific requirements are present, or when more than one type of chemical is used.
B	Acid	Applications involving sulphur dioxide, hydrofluoric acid fumes. Removes inorganic/organic acid vapors and fumes.
C	Mercury	Highly effective for removal of mercury vapor and compounds. (Stable, non-volatile mercuric sulphide filter media).
D	Sulphur	Removal of sulphur compounds.
E	Halogen	Removal of halogen compounds like Chlorine, Fluorine, Iodine, Bromine, Astatine etc.
F	Aldehyde	Formaldehyde applications or when aldehydes are present. Hospital pathology and endoscopy applications.
G	Ammonia/Amines	High performance removal of ammonia/amines by chemisorption.

APPENDIX

Note:
1. Power supply 220-240VAC, 50Hz/60Hz, single phase
2. 8uF Capacitor for 50Hz
3. 10uF Capacitor for 60Hz

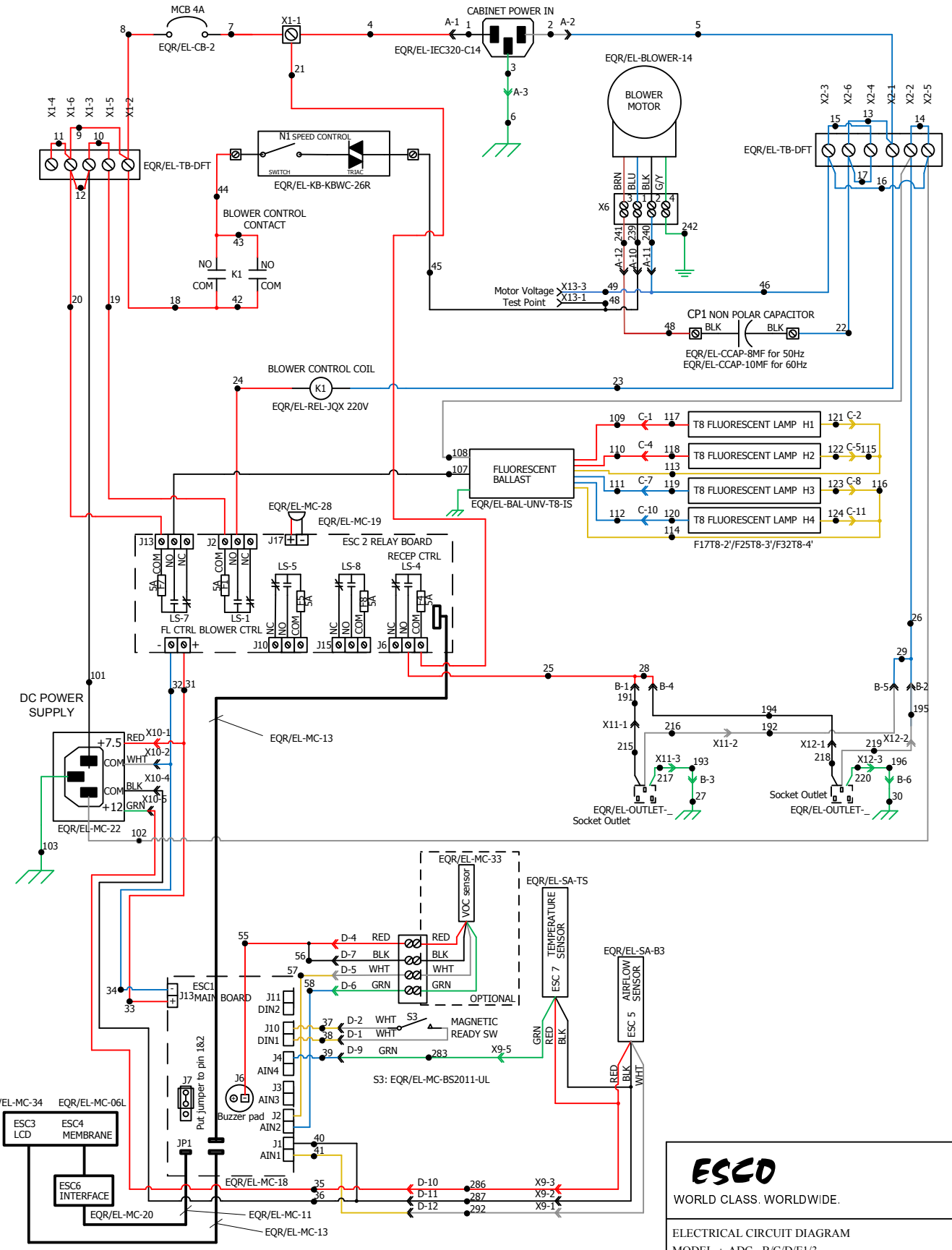

MODEL: ADC-2B1, ADC-3B1, ADC-4B1, ADC-5B1, ADC-6B1
ADC-2C1, ADC-3C1, ADC-4C1, ADC-5C1, ADC-6C1
ADC-2D1, ADC-3D1, ADC-4D1, ADC-5D1, ADC-6D1
ADC-2E1, ADC-3E1, ADC-4E1, ADC-5E1, ADC-6E1
ADC-2B3, ADC-3B3, ADC-4B3, ADC-5B3, ADC-6B3
ADC-2C3, ADC-3C3, ADC-4C3, ADC-5C3, ADC-6C3
ADC-2D3, ADC-3D3, ADC-4D3, ADC-5D3, ADC-6D3
ADC-2E3, ADC-3E3, ADC-4E3, ADC-5E3, ADC-6E3

ESCO
WORLD CLASS. WORLDWIDE.

ELECTRICAL CIRCUIT DIAGRAM
MODEL : ADC-_B/C/D/E1/3

DWG TITLE : EP – P – ADC-_X1/3

REV	DRAWN	CHECKED	REL. DATE	REMARK
2	INDRA W	INDRA S	2009-03-18	Wire Labeling, add page and combined drawing for 50Hz and 60Hz
3	INDRA W	INDRA S	2010-02-04	Change Blower and Capacitor for 2ft
4	INDRA W	INDRA S	2010-12-24	Add VOC Sensor as Optional

Page 1/2

NO	COLOR	AWG
1	Black	14
2	White	14
3	G/Y	14
4	Red	14
5	Blue	14
6	G/Y	14
7	Red	14
8	Red	14
9	Red	14
10	Red	14
11	Red	14
12	Red	14
13	Blue	14
14	Blue	14
15	Blue	14
16	Blue	14
17	Blue	14
18	Red	16
19	Red	16
20	Red	16
21	Red	16
22	Blue	16
23	Blue	16
24	Red	16
25	Red	16
26	Blue	16
27	G/Y	16
28	Red	16
29	Blue	16
30	G/Y	16
31	Red	18
32	Blue	18
33	Red	18
34	Blue	18
35	Red	18
36	Black	18
37	Yellow	18
38	Yellow	18
39	Blue	18
40	Black	18
41	Yellow	18
42	Red	16
43	Red	16
44	Red	16
45	Black	16
46	Blue	16
47	Brown	16
48	Black	18
49	Blue	18
50*	G/Y	14
51*	G/Y	14
52*	G/Y	14
53*	G/Y	14
54*	G/Y	16
55	Red	18
56	Black	18
57	Yellow	18
58	Blue	18

SMPS

NO	COLOR	AWG
101	Black	18
102	White	18
103	Green	18

Fluorescent Ballast

NO	COLOR	AWG
107	Black	18
108	White	18
109	Red	18
110	Red	18
111	Blue	18
112	Blue	18
113	Yellow	18
114	Yellow	18
115	Yellow	18
116	Yellow	18
117	Red	18
118	Red	18
119	Blue	18
120	Blue	18
121	Yellow	18
122	Yellow	18
123	Yellow	18
124	Yellow	18

Socket Outlet

NO	COLOR	AWG
191	Black	16
192	White	16
193	Green	16
194	Black	16
195	White	16
196	Green	16
215	Black	16
216	White	16
217	Green	16
218	Black	16
219	White	16
220	Green	16

Motor Blower

NO	COLOR	AWG
239	Black	16
240	Blue	16
241	Brown	16
242	G/Y	16

Sensor

NO	COLOR	AWG
283	Green	22
286	Red	22
286	Black	22
292	White	22

* Ground Wires

Connector A, B, C, D

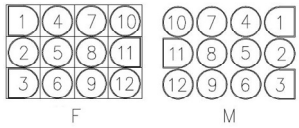

Connector X9, X10

Connector X11, X12, X13

ESCO

WORLD CLASS. WORLDWIDE.

ELECTRICAL CIRCUIT DIAGRAM
MODEL : ADC-_B/C/D/E1/3

DWG TITLE : EP – P – ADC-_X1/3

REV	DRAWN	CHECKED	REL. DATE	REMARK
2	INDRA W	INDRA S	2009-03-18	Wire Labeling, add page and combined drawing for 50Hz and 60Hz
3	INDRA W	INDRA S	2010-02-04	Change Blower and Capacitor for 2ft
4	INDRA W	INDRA S	2010-12-24	Add VOC Sensor as Optional

Note:
1. Power supply 220-240VAC, 50Hz/60Hz, single phase
2. 8uF Capacitor for 50Hz
3. 10uF Capacitor for 60Hz

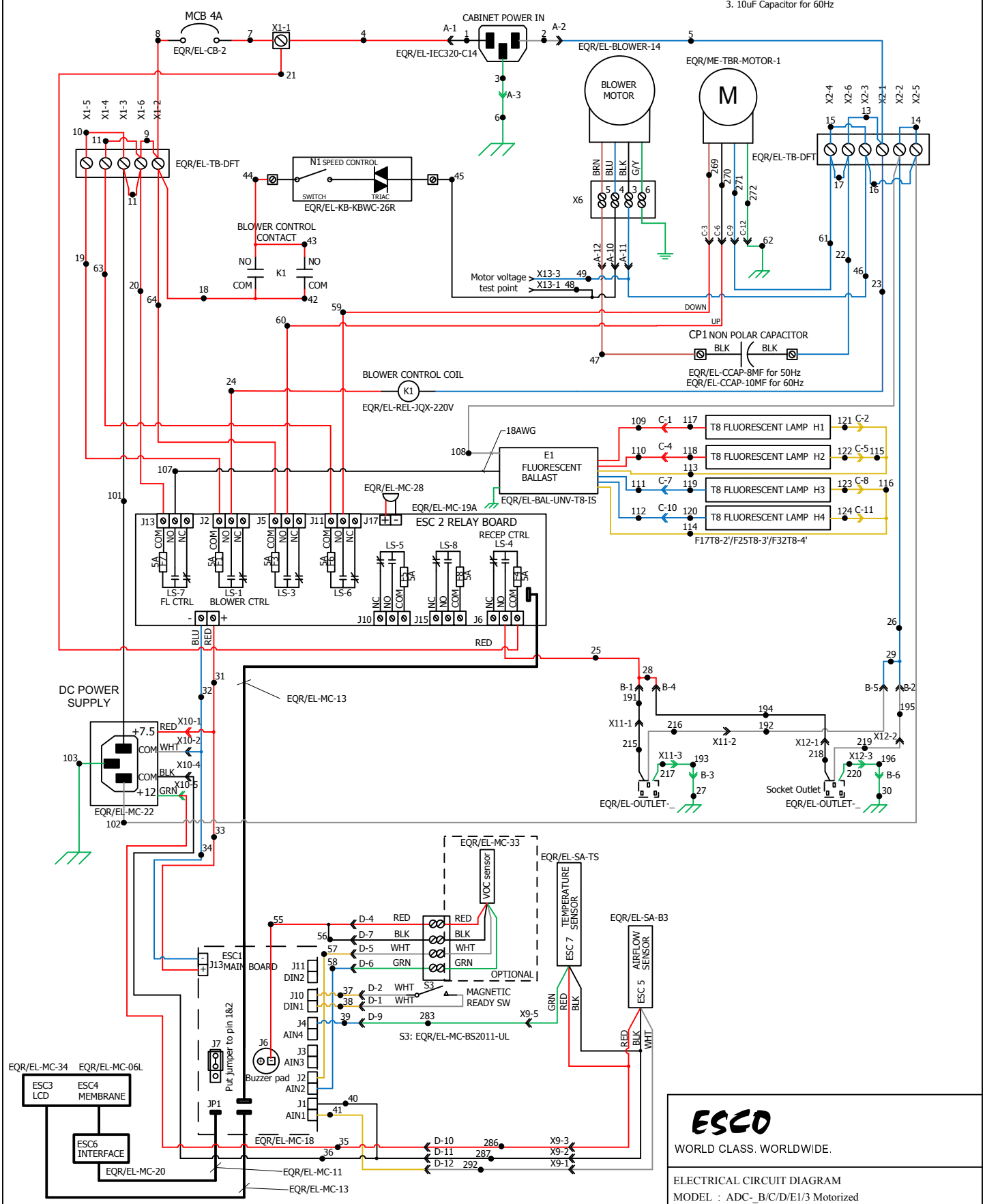

MODEL: ADC-3B1, ADC-4B1, ADC-5B1, ADC-6B1
ADC-3C1, ADC-4C1, ADC-5C1, ADC-6C1
ADC-3D1, ADC-4D1, ADC-5D1, ADC-6D1
ADC-3E1, ADC-4E1, ADC-5E1, ADC-6E1
ADC-3B1, ADC-4B1, ADC-5B1, ADC-6B1
ADC-3C1, ADC-4C1, ADC-5C1, ADC-6C1
ADC-3D1, ADC-4D1, ADC-5D1, ADC-6D1
ADC-3E1, ADC-4E1, ADC-5E1, ADC-6E1
With Motorized sash window

ESCO
WORLD CLASS. WORLDWIDE.

ELECTRICAL CIRCUIT DIAGRAM
MODEL : ADC-_B/C/D/E1/3 Motorized

DWG TITLE : EP-P-ADC-_X1/3-M

REV	DRAWN	CHECKED	REL. DATE	REMARK
1	INDRA W	INDRA S	2009-01-12	Combined drawing of B, C, D, E Model
2	INDRA W	INDRA S	2009-03-18	Wire Labeling, add page and combined drawing for 50Hz and 60Hz
3	INDRA W	INDRA S	2010-12-24	Add VOC Sensor as Optional

Page 1/2

NO	COLOR	AWG
1	Black	14
2	White	14
3	G/Y	14
4	Red	14
5	Blue	14
6	G/Y	14
7	Red	14
8	Red	14
9	Red	14
10	Red	14
11	Red	14
12	Red	14
13	Blue	14
14	Blue	14
15	Blue	14
16	Blue	14
17	Blue	14
18	Red	16
19	Red	16
20	Red	16
21	Red	16
22	Blue	16
23	Blue	16
24	Red	16
25	Red	16
26	Blue	16
27	G/Y	16
28	Red	16
29	Blue	16
30	G/Y	16
31	Red	18
32	Blue	18
33	Red	18
34	Blue	18
35	Red	18
36	Black	18
37	Yellow	18
38	Yellow	18
39	Blue	18
40	Black	18
41	Yellow	18
42	Red	16
43	Red	16
44	Red	16
45	Black	16
46	Blue	16
47	Brown	16
48	Black	18
49	Blue	18
50*	G/Y	14
51*	G/Y	14
52*	G/Y	14
53*	G/Y	14
54*	G/Y	16
55	Red	18
56	Black	18
57	Yellow	18
58	Blue	18

NO	COLOR	AWG
59	Red	16
60	Red	16
61	Blue	16
62	G/Y	16
63	Red	16
64	Red	16

SMPS

NO	COLOR	AWG
101	Brown	18
102	Blue	18
103	G/Y	18

Fluorescent Ballast

NO	COLOR	AWG
107	Black	18
108	White	18
109	Red	18
110	Red	18
111	Blue	18
112	Blue	18
113	Yellow	18
114	Yellow	18
115	Yellow	18
116	Yellow	18
117	Red	18
118	Red	18
119	Blue	18
120	Blue	18
121	Yellow	18
122	Yellow	18
123	Yellow	18
124	Yellow	18

Socket Outlet

NO	COLOR	AWG
191	Black	16
192	White	16
193	Green	16
194	Black	16
195	White	16
196	Green	16
215	Black	16
216	White	16
217	Green	16
218	Black	16
219	White	16
220	Green	16

Motor Blower

NO	COLOR	AWG
239	Black	16
240	Blue	16
241	Brown	16
242	G/Y	16

Motorized

NO	COLOR	AWG
269	Brown	18
270	Black	18
271	Blue	18
272	G/Y	18

Sensor

NO	COLOR	AWG
283	Green	22
286	Red	22
286	Black	22
292	White	22

* Ground Wires

Connector A, B, C, D

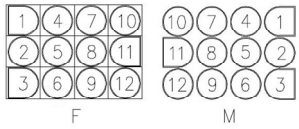

Connector X9, X10

Connector X11, X12, X13

ESCO

WORLD CLASS. WORLDWIDE.

ELECTRICAL CIRCUIT DIAGRAM
MODEL : ADC-_B/C/D/E1/3 Motorized

DWG TITLE : EP-P-ADC-_X1/3-M

REV	DRAWN	CHECKED	REL. DATE	REMARK
1	INDRA W	INDRA S	2009-01-12	Combined drawing of B, C, D, E Model
2	INDRA W	INDRA S	2009-03-18	Wire Labeling, add page and combined drawing for 50Hz and 60Hz
3	INDRA W	INDRA S	2010-12-24	Add VOC Sensor as Optional

Power supply 110-120VAC, 60HZ, single phase

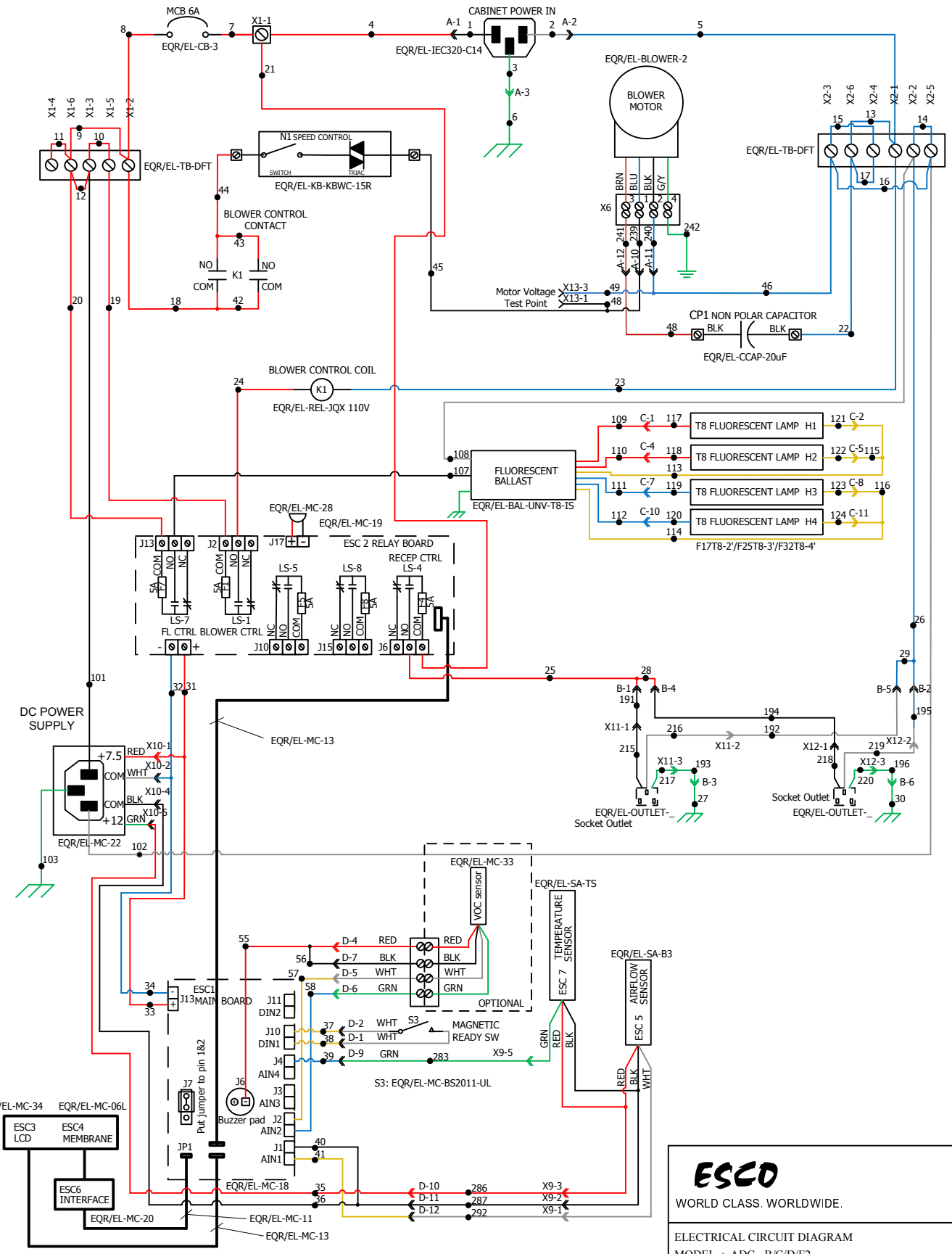

ESCO

WORLD CLASS. WORLDWIDE.

ELECTRICAL CIRCUIT DIAGRAM
MODEL : ADC-_B/C/D/E2

DWG TITLE : EP – Q – ADC-_X2

REV	DRAWN	CHECKED	REL. DATE	REMARK
3	INDRA W	INDRA S	2009-03-20	Wire Labeling and add page
4	INDRA W	INDRA S	2010-02-04	Change Blower and Capacitor for 2ft
5	INDRA W	INDRA S	2011-01-27	Add VOC Sensor as Optional

Page 1/2

MODEL: ADC-2B2, ADC-3B2, ADC-4B2, ADC-5B2, ADC-6B2
ADC-2C2, ADC-3C2, ADC-4C2, ADC-5C2, ADC-6C2
ADC-2D2, ADC-3D2, ADC-4D2, ADC-5D2, ADC-6D2
ADC-2E2, ADC-3E2, ADC-4E2, ADC-5E2, ADC-6E2

NO	COLOR	AWG
1	Black	14
2	White	14
3	G/Y	14
4	Red	14
5	Blue	14
6	G/Y	14
7	Red	14
8	Red	14
9	Red	14
10	Red	14
11	Red	14
12	Red	14
13	Blue	14
14	Blue	14
15	Blue	14
16	Blue	14
17	Blue	14
18	Red	16
19	Red	16
20	Red	16
21	Red	16
22	Blue	16
23	Blue	16
24	Red	16
25	Red	16
26	Blue	16
27	G/Y	16
28	Red	16
29	Blue	16
30	G/Y	16
31	Red	18
32	Blue	18
33	Red	18
34	Blue	18
35	Red	18
36	Black	18
37	Yellow	18
38	Yellow	18
39	Blue	18
40	Black	18
41	Yellow	18
42	Red	16
43	Red	16
44	Red	16
45	Black	16
46	Blue	16
47	Brown	16
48	Black	18
49	Blue	18
50*	G/Y	14
51*	G/Y	14
52*	G/Y	14
53*	G/Y	14
54*	G/Y	16
55	Red	18
56	Black	18
57	Yellow	18
58	Blue	18

SMPS

NO	COLOR	AWG
101	Black	18
102	White	18
103	Green	18

Fluorescent Ballast

NO	COLOR	AWG
107	Black	18
108	White	18
109	Red	18
110	Red	18
111	Blue	18
112	Blue	18
113	Yellow	18
114	Yellow	18
115	Yellow	18
116	Yellow	18
117	Red	18
118	Red	18
119	Blue	18
120	Blue	18
121	Yellow	18
122	Yellow	18
123	Yellow	18
124	Yellow	18

Socket Outlet

NO	COLOR	AWG
191	Black	16
192	White	16
193	Green	16
194	Black	16
195	White	16
196	Green	16
215	Black	16
216	White	16
217	Green	16
218	Black	16
219	White	16
220	Green	16

Motor Blower

NO	COLOR	AWG
239	Black	16
240	Blue	16
241	Brown	16
242	G/Y	16

Sensor

NO	COLOR	AWG
283	Green	22
286	Red	22
286	Black	22
292	White	22

* Ground Wires

Connector A, B, C, D

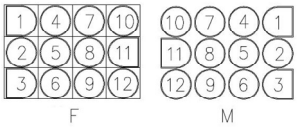

Connector X9, X10

Connector X11, X12, X13

ESCO

WORLD CLASS. WORLDWIDE.

ELECTRICAL CIRCUIT DIAGRAM
MODEL : ADC-_B/C/D/E2

DWG TITLE : EP – Q – ADC-_X2

REV	DRAWN	CHECKED	REL. DATE	REMARK
3	INDRA W	INDRA S	2009-03-20	Wire Labeling and add page
4	INDRA W	INDRA S	2010-02-04	Change Blower and Capacitor for 2ft
5	INDRA W	INDRA S	2011-01-27	Add VOC Sensor as Optional

Power supply 110-120VAC, 60HZ, single phase

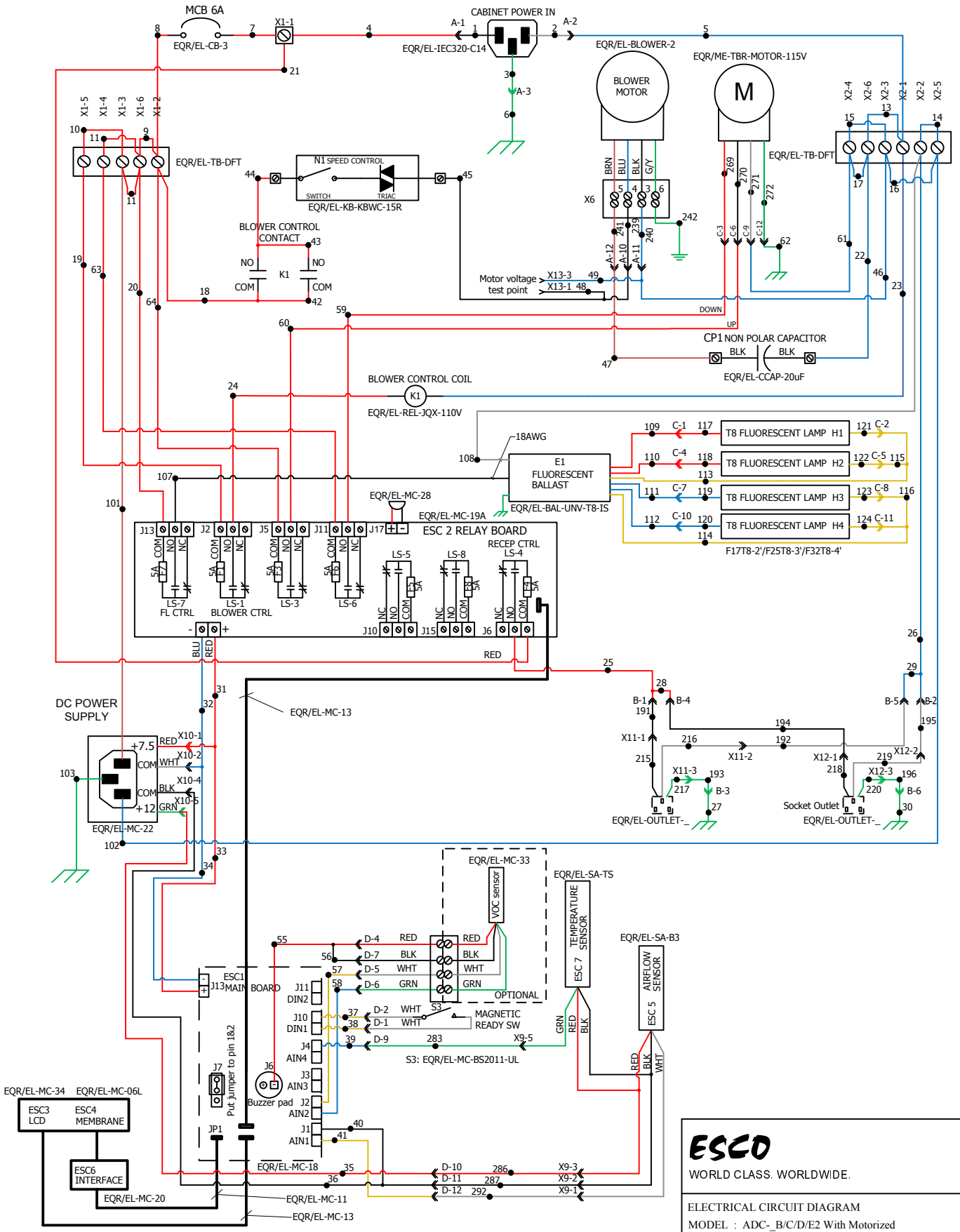

MODEL: ADC-3B2, ADC-4B2, ADC-5B2, ADC-6B2
ADC-3C2, ADC-4C2, ADC-5C2, ADC-6C2
ADC-3D2, ADC-4D2, ADC-5D2, ADC-6D2
ADC-3E2, ADC-4E2, ADC-5E2, ADC-6E2

ESCO
WORLD CLASS. WORLDWIDE.

ELECTRICAL CIRCUIT DIAGRAM
MODEL : ADC-_B/C/D/E2 With Motorized

DWG TITLE : EP-Q-ADC-_X2-M

REV	DRAWN	CHECKED	REL. DATE	REMARK
2	INDRA W	INDRA S	2009-03-11	Combined drawing of B, C, D, E Model
3	INDRA W	INDRA S	2009-03-18	Wire Labeling and add page
4	INDRA W	INDRA S	2011-01-27	Add VOC Sensor as Optional

Page 1/2

NO	COLOR	AWG
1	Black	14
2	White	14
3	G/Y	14
4	Red	14
5	Blue	14
6	G/Y	14
7	Red	14
8	Red	14
9	Red	14
10	Red	14
11	Red	14
12	Red	14
13	Blue	14
14	Blue	14
15	Blue	14
16	Blue	14
17	Blue	14
18	Red	16
19	Red	16
20	Red	16
21	Red	16
22	Blue	16
23	Blue	16
24	Red	16
25	Red	16
26	Blue	16
27	G/Y	16
28	Red	16
29	Blue	16
30	G/Y	16
31	Red	18
32	Blue	18
33	Red	18
34	Blue	18
35	Red	18
36	Black	18
37	Yellow	18
38	Yellow	18
39	Blue	18
40	Black	18
41	Yellow	18
42	Red	16
43	Red	16
44	Red	16
45	Black	16
46	Blue	16
47	Brown	16
48	Black	18
49	Blue	18
50*	G/Y	14
51*	G/Y	14
52*	G/Y	14
53*	G/Y	14
54*	G/Y	16
55	Red	18
56	Black	18
57	Yellow	18
58	Blue	18

NO	COLOR	AWG
59	Red	16
60	Red	16
61	Blue	16
62	G/Y	16
63	Red	16
64	Red	16

SMPS

NO	COLOR	AWG
101	Brown	18
102	Blue	18
103	G/Y	18

Fluorescent Ballast

NO	COLOR	AWG
107	Black	18
108	White	18
109	Red	18
110	Red	18
111	Blue	18
112	Blue	18
113	Yellow	18
114	Yellow	18
115	Yellow	18
116	Yellow	18
117	Red	18
118	Red	18
119	Blue	18
120	Blue	18
121	Yellow	18
122	Yellow	18
123	Yellow	18
124	Yellow	18

Socket Outlet

NO	COLOR	AWG
191	Black	16
192	White	16
193	Green	16
194	Black	16
195	White	16
196	Green	16
215	Black	16
216	White	16
217	Green	16
218	Black	16
219	White	16
220	Green	16

Motor Blower

NO	COLOR	AWG
239	Black	16
240	Blue	16
241	Brown	16
242	G/Y	16

Motorized

NO	COLOR	AWG
269	Red	18
270	Black	18
271	White	18
272	G/Y	18

Sensor

NO	COLOR	AWG
283	Green	22
286	Red	22
286	Black	22
292	White	22

* Ground Wires

Connector A, B, C, D

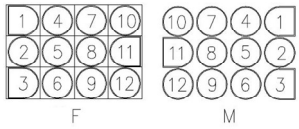

Connector X9, X10

Connector X11, X12, X13

ESCO

WORLD CLASS. WORLDWIDE.

ELECTRICAL CIRCUIT DIAGRAM
MODEL : ADC-_B/C/D/E2 With Motorized

DWG TITLE : EP-Q-ADC-_X2-M

REV	DRAWN	CHECKED	REL. DATE	REMARK
2	INDRA W	INDRA S	2009-03-11	Combined drawing of B, C, D, E Model
3	INDRA W	INDRA S	2009-03-18	Wire Labeling and add page
4	INDRA W	INDRA S	2011-01-27	Add VOC Sensor as Optional

LOG RECORD

Fume Hood : _____
Serial Number : _____
Person in Charge : _____

1. This log record should be used by the operator to record any new chemical that has been introduced to the cabinet during its operation, problems encountered, etc.
2. Any decontamination procedure performed by either the user or the technician should be recorded down as well.
3. Please also record any major maintenance procedure performed by the service technician, for example: filter changing, recertification, etc.

Date	Event	User Signature	Supervisor Signature

In case of emergencies, please call:
Name : _____
Cell Phone Number : _____
E-mail : _____