eppendorf

Register your instrument!
www.eppendorf.com/myeppendorf

CellXpert® C170

Operating manual

Copyright © 2018 Eppendorf AG, Germany. All rights reserved, including graphics and images. No part of this publication may be reproduced without the prior permission of the copyright owner.

Eppendorf® and the Eppendorf Brand Design are registered trademarks of Eppendorf AG, Germany.

CellXpert® and VisioNize® are registered trademarks of Eppendorf AG, Germany.

Registered trademarks and protected trademarks are not marked in all cases with ® or ™ in this manual.

6734 900.011-00/062018

Table of contents

1 Operating instructions . . . 7
1.1 Using this manual . . . 7
1.2 Danger symbols and danger levels . . . 7
1.2.1 Danger symbols . . . 7
1.2.2 Danger levels . . . 7
1.3 Symbols used . . . 8

2 Safety . . . 9
2.1 Intended use . . . 9
2.2 User profile . . . 9
2.3 Personal protective equipment . . . 9
2.4 Application limits . . . 10
2.4.1 Description of ATEX Guideline 94/9EC . . . 10
2.5 Information on product liability . . . 10
2.6 Warnings for intended use . . . 11
2.6.1 Personal injury and damage to device . . . 11
2.7 Warning signs on the device . . . 14
2.8 Name plate . . . 15

3 Product description . . . 17
3.1 Product overview . . . 17
3.1.1 CellXpert C170 . . . 17
3.1.2 Inside the chamber . . . 19
3.1.3 Inner door . . . 20
3.1.4 Segmented inner doors (options) . . . 20
3.1.5 Connectivity . . . 22
3.2 Delivery package . . . 22

4 Installation . . . 23
4.1 Utilities requirements . . . 23
4.2 Selecting the location . . . 23
4.3 Positioning the incubator . . . 24
4.4 Initial setup . . . 26
4.4.1 Leveling the incubator . . . 26
4.4.2 Fixing the incubator . . . 26
4.5 Making connections . . . 28
4.5.1 Electrical connection . . . 28
4.5.2 Gas connection . . . 29
4.5.3 Ethernet connection . . . 30
4.6 BMS relay contact alarm . . . 31
4.6.1 Incubator operating with and without alarm . . . 32

5 Operation . . . 35
5.1 Preparing for operation . . . 35
5.2 Functions and limitations . . . 36
5.2.1 Temperature management . . . 36
5.2.2 CO_2 . . . 36
5.3 Opening and closing doors . . . 36

5.3.1 Opening the inner and the outer door . . . 37
5.3.2 Closing the inner and the outer door . . . 37
5.4 Using the water tray . . . 37
5.5 Using the access ports . . . 38
5.6 Safety shutdown . . . 38
5.6.1 Temperature . . . 39
5.6.2 Gas . . . 39
5.7 Switching off the device . . . 39

6 Overview of operating controls . . . 41
6.1 Home screen overview . . . 41
6.2 Home screen in normal operation . . . 42
6.3 Menu . . . 42
6.4 Setting the parameter values . . . 43
6.4.1 Save the settings . . . 44
6.4.2 Exit without saving . . . 44
6.5 Getting device information . . . 45
6.6 Error notifications . . . 45

7 Maintenance . . . 47
7.1 Routine maintenance . . . 47
7.1.1 General . . . 47
7.1.2 Daily checks . . . 47
7.1.3 Weekly checks . . . 47
7.1.4 Monthly checks . . . 47
7.2 Exterior cleaning . . . 48
7.3 Disinfection/Decontamination . . . 48
7.3.1 Preparing the disinfection/decontamination . . . 49
7.3.2 Disinfecting the exterior . . . 49
7.3.3 Disassembling the interior equipment . . . 49
7.3.4 Disinfecting/Decontaminating the interior . . . 50
7.3.5 Reassembling the interior equipment . . . 50
7.3.6 Putting into operation . . . 52
7.4 High-temperature disinfection (HTD) . . . 52

8 Troubleshooting . . . 55
8.1 General errors . . . 55

9 Transport, storage and disposal . . . 61
9.1 Transport . . . 61
9.1.1 Conditions of transport . . . 61
9.2 Storage . . . 61
9.3 Decontamination before shipment . . . 61
9.4 Disposal . . . 62

10 Technical data . . . 63
10.1 Weight/dimensions . . . 63
10.1.1 Equipment dimensions . . . 63
10.1.2 Internal dimensions . . . 63
10.1.3 Floor space required . . . 64

10.1.4 Transporting dimensions . . . 64
10.1.5 Shelves . . . 64
10.1.6 Stacked CellXpert C170 . . . 65
10.2 Power supply . . . 66
10.3 Interfaces . . . 66
10.4 Ambient conditions . . . 66
10.4.1 Temperature management . . . 66
10.4.2 High-temperature disinfection . . . 66
10.4.3 CO_2 control . . . 67
10.4.4 Humidity . . . 67
10.4.5 Calibration . . . 67

11 Ordering information . . . 69
11.1 Shelves and shelf rack . . . 69
11.2 Gas system . . . 69
11.3 Electrics . . . 69
11.4 Connectivity . . . 69
11.5 Housing . . . 70
11.6 Accessories . . . 70
11.7 Upgrade options . . . 70

Index . . . 71

1 Operating instructions

1.1 Using this manual

- Read this operating manual thoroughly before using the device for the first time. Also observe the instructions for use of the accessories.
- This operating manual is part of the product. It must always be kept easily accessible.
- Enclose this operating manual when transferring the device to third parties.
- You will find the current version of the operating manual for all available languages on our website at www.eppendorf.com/manuals.

1.2 Danger symbols and danger levels

The safety instructions of this operating manual indicate the following danger symbols and danger levels:

1.2.1 Danger symbols

	Hazard point		**Hot surface**
	Electric shock		**Material damage**
	Explosion		**Heavy load**
	Inhalation		**Danger of cuts**
	Biohazard		**Magnetic fields**

1.2.2 Danger levels

DANGER	*Will* lead to severe injuries or death.
WARNING	*May* lead to severe injuries or death.
CAUTION	May lead to light to moderate injuries.
NOTICE	May lead to material damage.

1.3 Symbols used

Depiction	Meaning
1. 2.	Actions in the specified order
▸	Actions without a specified order
•	List
Text	Display or software texts
ⓘ	Additional information

2 Safety

2.1 Intended use

The CellXpert C170 CO_2 incubator is designed to and serve to provide a stable and homogeneous atmosphere required for cell culture by controlling temperature and carbon dioxide for cultivating samples and cells from biological laboratories. It is intended exclusively for use indoors and for operation by qualified staff for research purposes only.

CAUTION! Lack of safety due to incorrect accessories or spare parts

- Accessories and spare parts that are not recommended by Eppendorf compromise the safety, functions, and precision of the device. Eppendorf cannot be held liable or accept any liability for damage resulting from the use of non-recommended accessories and spare parts.
- Only use accessories and original spare parts recommended by Eppendorf.

2.2 User profile

The device and accessories may only be operated by trained and skilled personnel.

Before using the device, read the operating manual carefully and familiarize yourself with the device's mode of operation.

CAUTION! Risk of personal injury or damage to equipment due to misappliance of equipment

- The equipment must be operated as described in this manual. If operational guidelines are not followed, equipment damage and personal injury can occur.
- Do not use the equipment in a hazardous atmosphere or with hazardous materials for which the equipment was not designed.
- Eppendorf is not responsible for any damage to the equipment that may result from the use of an accessory not manufactured by Eppendorf.

2.3 Personal protective equipment

Personal protective equipment protects your life and your health.

- Always wear protective clothing, protective gloves, and safety boots.
- If additional protective equipment is required, this is indicated above the respective instruction.
- Always wear the personal protective equipment required for the biosafety level and by the laboratory regulations.

2.4 Application limits

2.4.1 Description of ATEX Guideline 94/9EC

DANGER! Explosion hazard

- Do not operate the device in areas where work is completed with explosive substances.
- Do not use this device to process any explosive or highly reactive substances.
- Do not use this device to process any substances which could create an explosive atmosphere.

DANGER! Explosion hazard

- Use gases in this equipment only within the range between their lower explosion limit (LEL) and their upper explosion limit (UEL).
- If your process requires or produces gases, be sure to verify their LEL and UEL concentration range (available online or ask your gas supplier).

CAUTION! Lack of safety due to incorrect use of materials

- Do not use this device to process any flammable materials, or use materials where the transfer of mechanical energy to glass apparatus could lead to breakage.

Due to its design and the ambient conditions in its interior, the device is not suitable for use in potentially explosive atmospheres.

The device may only be used in a safe environment, e.g., the open atmosphere of a ventilated lab.

The use of substances which may contribute to a potentially explosive atmosphere is not permitted.

The final decision regarding the risks associated with using these types of substances is the user's responsibility.

2.5 Information on product liability

In the following cases, the designated protection of the device may be affected. Liability for any resulting damage or personal injury is then transferred to the owner:

- The device is not used in accordance with the operating manual.
- The device is used outside of its intended use.
- The device is used with accessories or consumables that are not recommended by Eppendorf.
- The device is maintained or repaired by persons not authorized by Eppendorf AG.
- The user makes unauthorized changes to the device.

2.6 Warnings for intended use

Before using the device, read the operating manual and observe the following general safety instructions.

2.6.1 Personal injury and damage to device

DANGER! Unconsciousness and death by elevated levels of CO_2
Elevated levels of CO_2 may be found in the operating area of the CO_2 incubator.

- Wear personal protective equipment.
- If the laboratory is not properly ventilated, use a CO_2/O_2 alarm system.
- Check the tube connection system with a leakage test.
- Read the *Information on performing a risk assessment for the operation of incubators with CO_2 and N_2* from Eppendorf AG.

WARNING! Lack of safety due to incorrect gas installation or insufficient ventilation

- Only trained personnel may install and connect the gas tubing.

WARNING! Risk of suffocation

- Observe the national guidelines on handling gases and on the equipment and operation of laboratories.
- Prevent a too high concentration of CO_2 in breathing air while working in the laboratory.

WARNING! Risk of personal injury
Burns due to hot surface.

- Do not touch the equipment during the high-temperature disinfection cycle.
- Do not open the doors during the cycle.
- Do not open the doors after a system crash or a mains/power outage during the high temperature disinfection.

WARNING! Risk of personal injury
Scalding due to hot water.

- Remove water from the water tray before starting the high-temperature disinfection cycle.

WARNING! Damage to health due to infectious liquids and pathogenic germs.

- When handling infectious liquids and pathogenic germs, observe the national regulations, the biological security level of your laboratory, the safety data sheets, and the manufacturer's application notes.
- Wear your personal protective equipment.
- Consult the "Laboratory Biosafety Manual" (source: World Health Organization, Laboratory Biosafety Manual, in its respective current valid version).

WARNING! Damage to health due to toxic, radioactive or aggressive chemicals.

- Wear your personal protective equipment.
- Observe the national regulations for handling these substances.
- Observe the safety data sheets and manufacturer's application notes.

WARNING! Electric shock due to damage to device or mains/power cord.

- Only switch on the device if the device and the mains/power cord are undamaged.
- Only use devices that have been properly installed or repaired.
- In case of danger, disconnect the device from the mains supply. Disconnect the mains/power plug from the device or the earth/grounded socket. Use the isolating device intended for this purpose (e.g., the emergency switch in the laboratory).

WARNING! Danger due to strong magnetic field
Magnetic fields may affect pacemakers and defibrillators. Pacemakers may be reset.

- Keep a distance of at least 20 cm from the magnet.

WARNING! Risk of personal injury

- Do not open the device!
- Do not operate a broken device! (*E.g.* if the exterior is damaged)
- Do not modify the device!

WARNING! Risk of personal injury and equipment damage
The incubator or incubators may topple, if they are not fixed with a safety latch.

- Each incubator or stack of two incubators on a stacking stand must be fixed to the wall with a safety latch.

CAUTION! Risk of personal injury

- At least 4 people are required to safely lift the incubator.
- The incubator has a high center of gravity. Make sure that it does not topple over when it is moved.

CAUTION! Risk of personal injury

- Observe the safety standards of your lab.
- Use your personal protective equipment.

CAUTION! Risk of personal injury

- Before closing the glass door, make sure that the shelves are properly installed inside the chamber. Slamming the glass door against the shelf could cause broken glass and injury.

NOTICE! Material damage from incorrect connections.

- Only electrical connections may be made to devices described in the operating manual.
- Other connections are permitted only with the agreement of Eppendorf AG.
- Only connect devices that meet the safety requirements defined in IEC 60950-1.

NOTICE! Damage to the incubator
Lifting the incubator by the door will cause permanent damage to the incubator.

- Lift the incubator only by the lifting handles.
- Never lift the incubator by its door.

NOTICE! Damage to door latch and hinge

- Do not lean on the door.
- Do not put any items on the door.

NOTICE! Risk of material damage

- Never put any liquid material on the top of the incubator. Spilled liquid could cause a short circuit. This will cause permanent damage to the incubator.

NOTICE! Risk of material damage

- To avoid possible damage to the CO_2 sensor due to condensation, never leave water in the water tray while the incubator is switched off, or when a high temperature disinfection cycle is initiated.

NOTICE! Risk of material damage
The gas tubing and in-line gas filter will burst or crack due to high pressure.

- Incoming CO_2 gas pressure must not exceed 0.15 MPa (1.5 bar, 21.8 psi).

NOTICE! Risk of material damage

- The instrument or equipment, and its external connections, to be used inside the chamber should be specified as suitable for use in a humid environment, and at 37 °C. If in doubt, consult with the manufacturer of the equipment.
- Always ensure that the connections are properly and securely made.
- Instruments transfer heat into the chamber. Do not allow too much heat to be transferred into the chamber. Too much heat will affect the temperature control or activate the temperature limiter; this could cause the loss of sample.

NOTICE! Risk of material damage

- Do not modify the device; this could cause the loss of sample.

NOTICE! Damage due to overheating

- Do not place the device close to sources of heat (e.g., radiator, drying cabinet).
- Do not expose the device to direct sunlight.
- Ensure that all sides of the device are in an adequate distance from the wall and adjacent devices to guarantee unobstructed air circulation.

The mains/power switch and cutting unit of the mains/power line must be easily accessible during operation (e.g., residual current circuit breaker).

If high temperature settings are used, be aware of heated parts, when touching the incubator or coming into contact with interior parts.

2.7 Warning signs on the device

Symbol	Meaning	Location
	Hazard point ▸ Observe the operating manual	On the name plate at the rear of the device
	Risk of burns from hot surfaces	Top left and right on the door panel, visible when outer door is opened
	Read the operating manual	Right side, next to the mains/ power switch
	Warning Strong magnetic fields produced by the magnets used for door locking	Top left and top right on the front panel, visible when outer door is opened. Right side next to the door closing magnets (left side when door hinge is on the right side).

2.8 Name plate

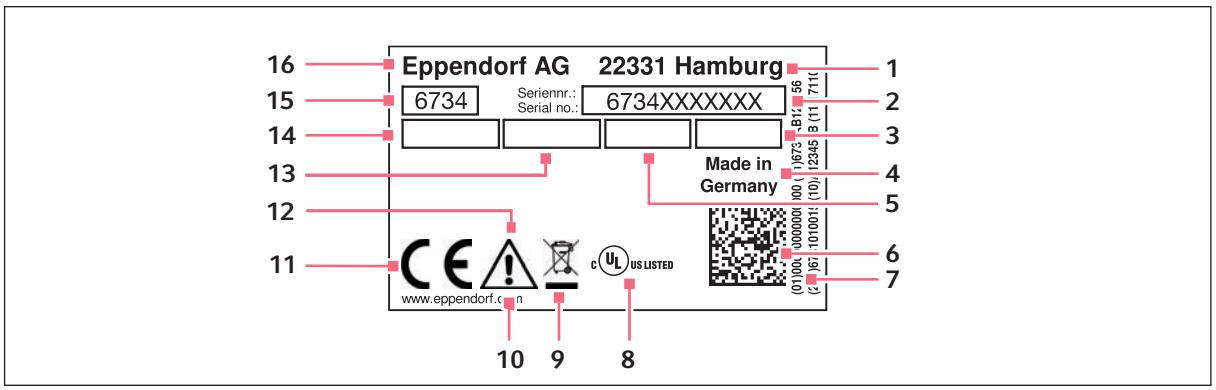

Fig. 2-1: Name plate

1	Manufacturer address
2	Serial number
3	Power consumption
4	Place of origin
5	Current consumption
6	Data matrix code
7	Content of the data matrix code
8	UL certification mark
9	Waste Electrical and Electronic Equipment Directive
10	Manufacturer web address
11	CE certification mark
12	Caution: Hazard point Read the manual which refers to the hazard points.
13	Frequency
14	Voltage
15	Device number
16	Manufacturer

3 Product description

3.1 Product overview

3.1.1 CellXpert C170

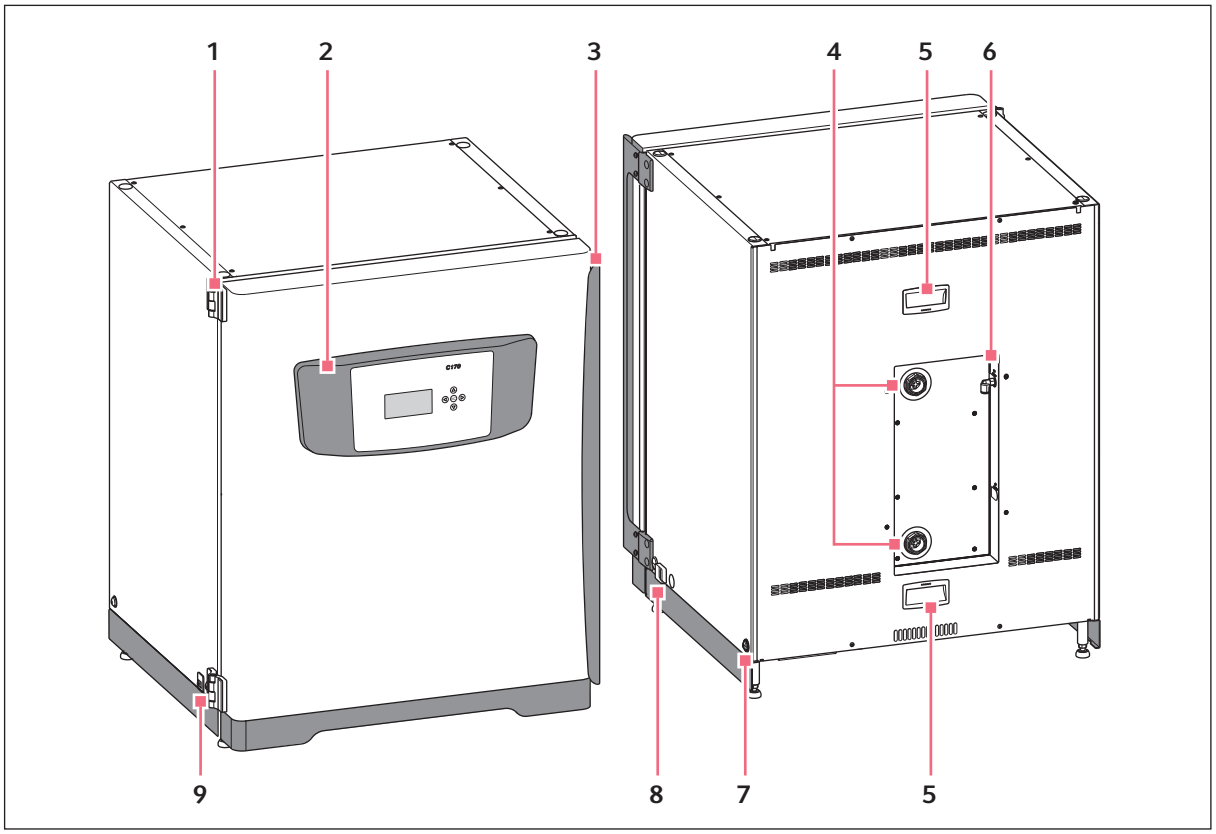

Fig. 3-1: CellXpert C170: Front and rear view

1 **Door hinge**

2 **Control panel**

3 **Door handle**

4 **Access ports**

5 **Molded recesses**
(only for service technician)

6 **CO_2 gas connection**

7 **Hole for installing the lifting handle**
(4)

8 **Mains/power switch**

9 **Service interface**

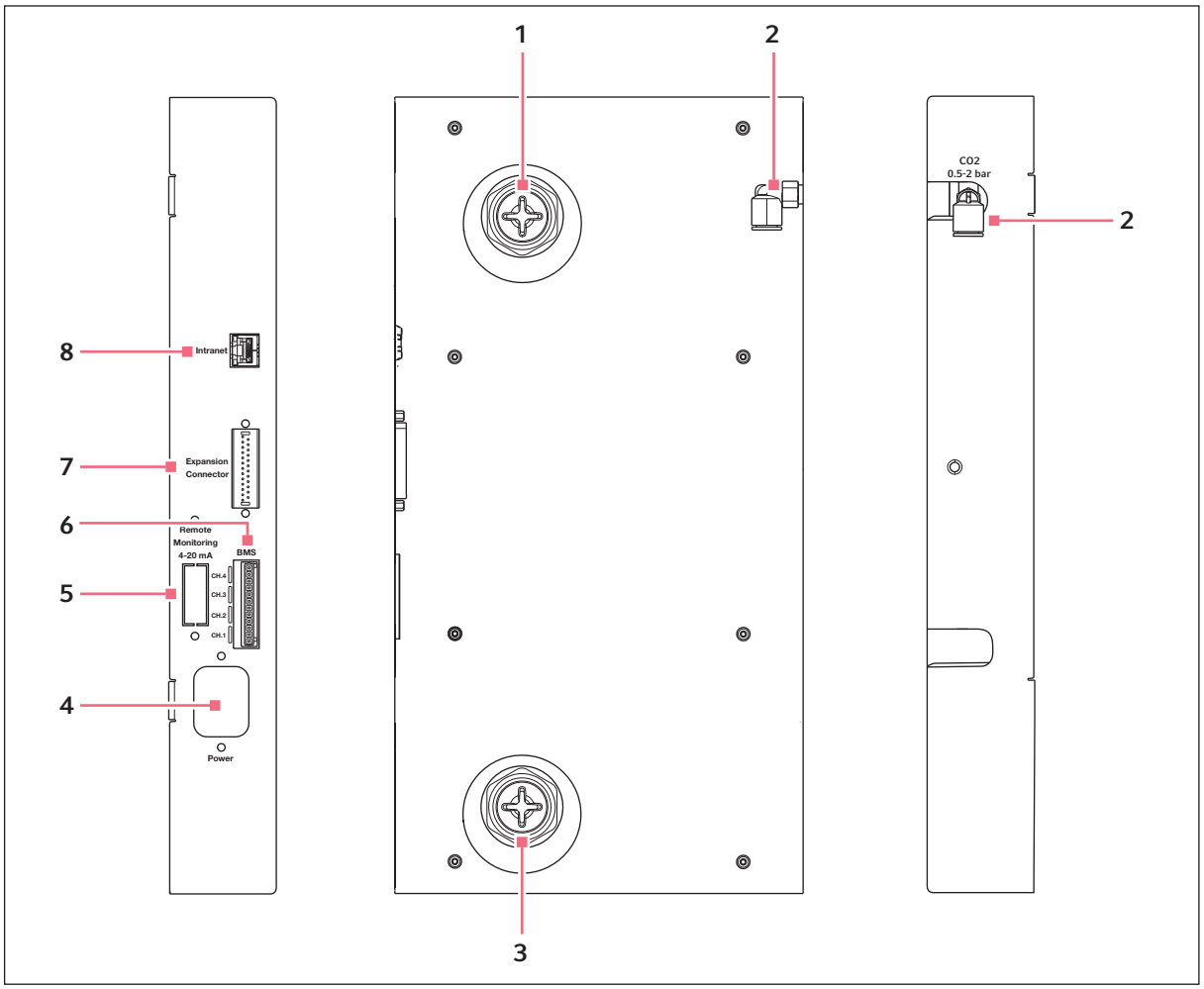

Fig. 3-2: CellXpert C170: Connections at the rear of the device

1 **Upper access port**

2 **CO_2 tube connector**

3 **Lower access port**

4 **Mains/power cord socket**

5 **Connection for remote monitoring (4-20 mA interface)**
(option)

6 **Connection for Building Management System (BMS)**
4 channels

7 **Expansion connector**
(option)

8 **Connection for intranet**

3.1.2 Inside the chamber

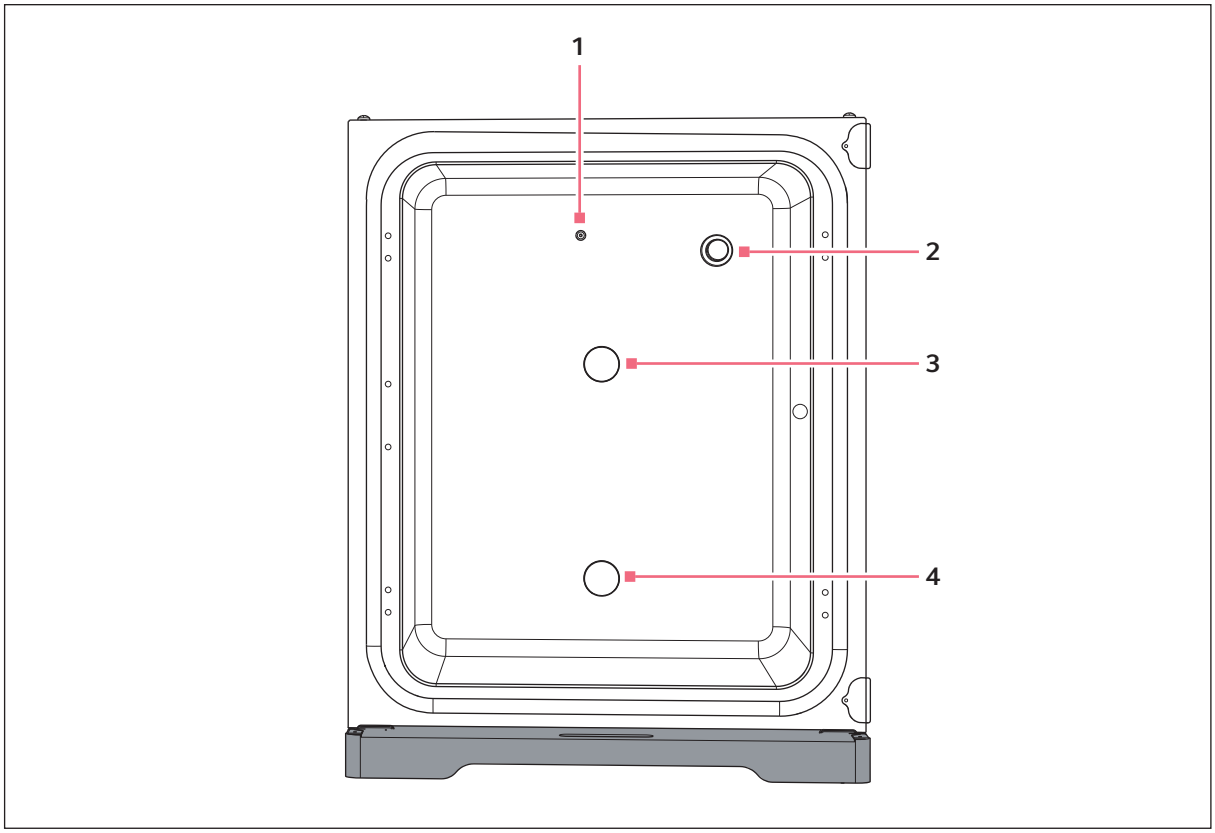

Fig. 3-3: CellXpert C170: Inside the chamber

1 Inlet for CO_2 gas

2 CO_2 sensor

3 Upper access port

4 Lower access port

3.1.3 Inner door

The standard CellXpert C170 is delivered with a non-segmented inner door.

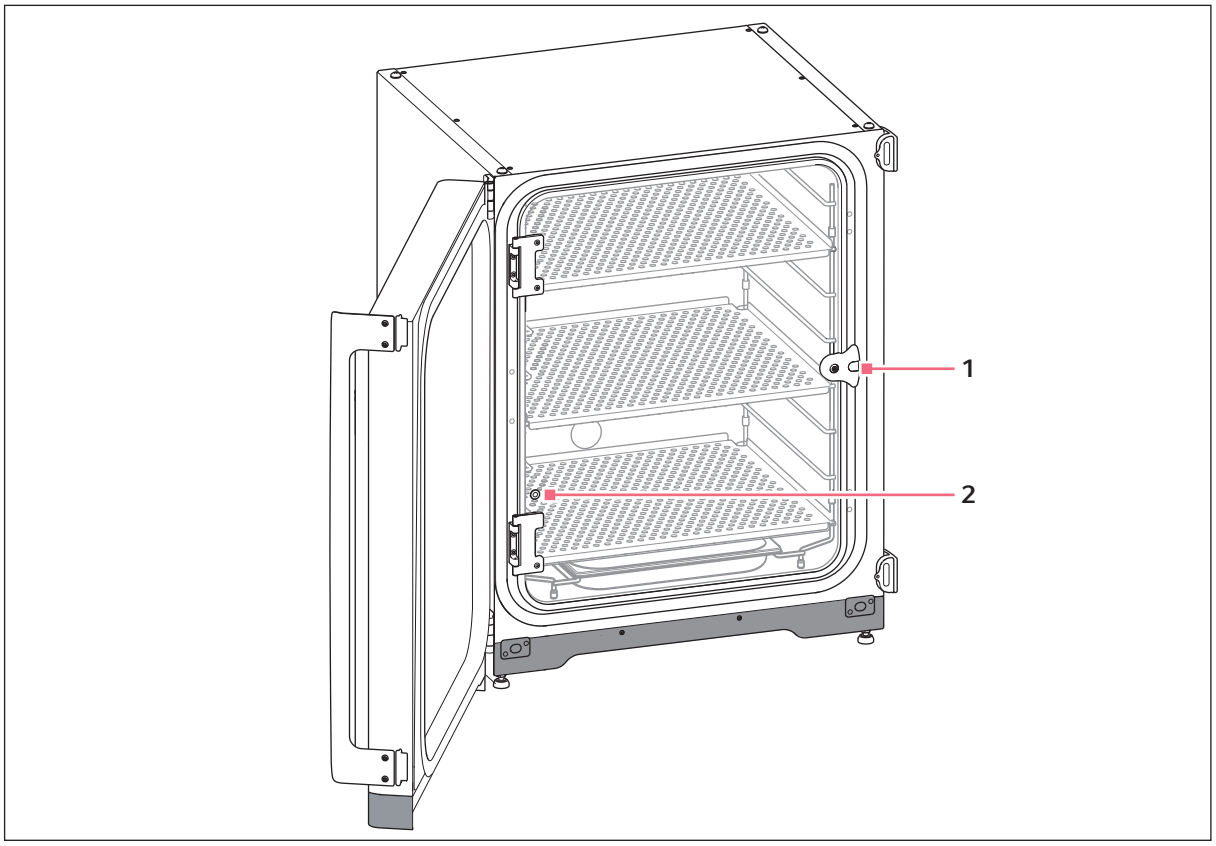

Fig. 3-4: Non-segmented inner door

1 Inner door latch

2 Sample port

3.1.4 Segmented inner doors (options)

There are two options available:

- Inner door with 4 door segments
- Inner door with 8 door segments

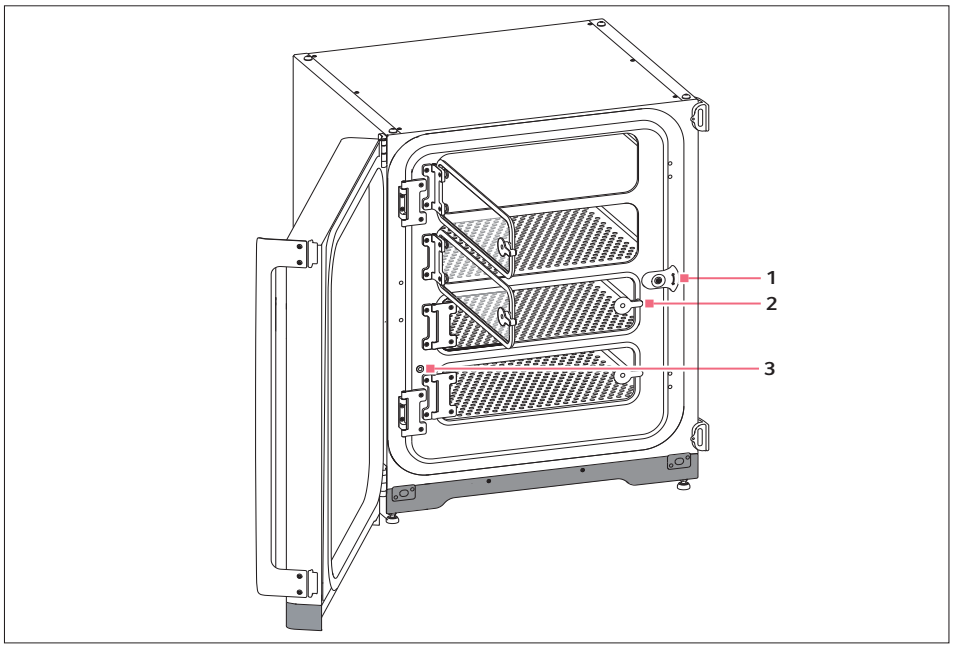

Fig. 3-5: Inner door with 4 door segments

1 Inner door latch
2 Door segment handle
3 Sample port

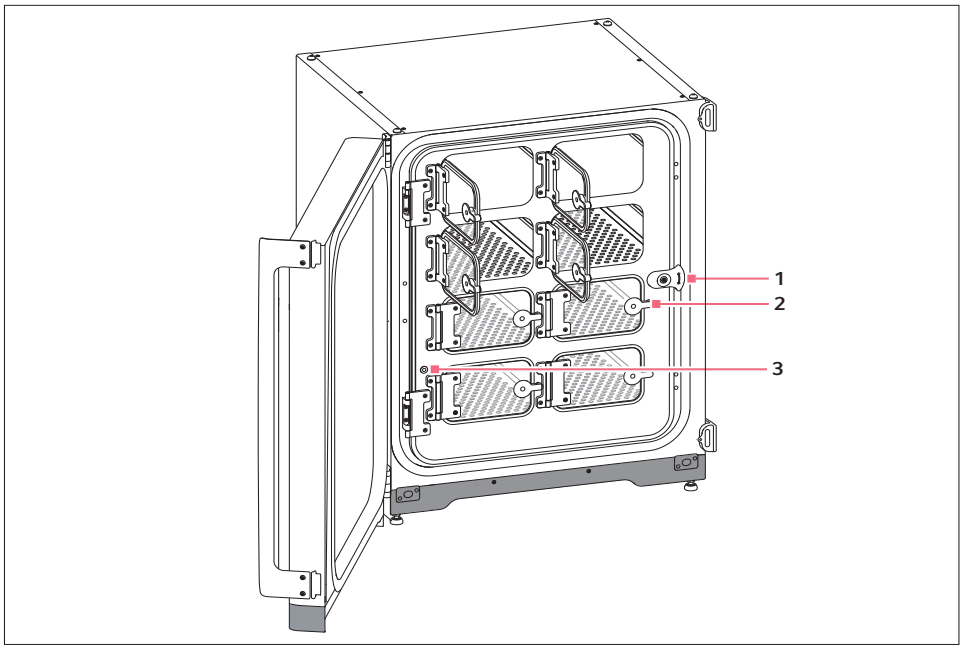

Fig. 3-6: Inner door with 8 door segments

1 Inner door latch
2 Door segment handle
3 Sample port

3.1.5 Connectivity

CellXpert C170 can be integrated into the Eppendorf connectivity solution: VisioNize® allows you to manage connected devices. It enables remote monitoring of device performance and notification of important events by e-mail. Detailed information regarding VisioNize can be found on the website www.eppendorf.com.

Accessories are required for connecting to VisioNize (see *Connectivity on p. 69)*.

3.2 Delivery package

- Check the delivery for completeness.
- Inspect all items for damage that may have occurred during delivery.
- To safely transport and store the device, keep the transport box and packing material.

Report any damage to the carrier and to your local Eppendorf sales order department immediately.

Quantity	Description	Notes
1	Device	Provided
1	Operating manual	Provided
1	Information on performing a risk assessment for the operation of incubators with CO_2 and N_2	Provided
3	Non-tip perforated shelf	Installed
1	Shelf rack	Installed
1	Water tray	Installed
2	Plug for access port	Installed
1	Mains/power cord	Packed in box inside outer carton
1	10 mm (0.4 in) outer diameter tubing with 6.5 mm (0.2 in) inner diameter with in-line gas filter Length: 3 m	Packed in accessory kit
4	Lifting handle	Packed in accessory kit
4	Cover caps	Packed in accessory kit
3	Spare shelf rack foot	Packed in accessory kit
3	Spare shelf rack spacer	Packed in accessory kit
4	Silicone foot	Packed in accessory kit
1	Safety fastening kit	Packed in accessory kit
1	BMS plug	Packed in accessory kit
2	Open-end wrench for adjusting the feet (8 mm and 13 mm)	Packed in accessory kit
4	Non-slipping cap for adjustable feet	Packed in accessory kit

4 Installation

4.1 Utilities requirements

The following utilities requirements are needed for operation:

Utility	Requirement
Electricity	Use an earthed/grounded mains/power supply which corresponds to the electrical prerequisites on the name plate. The mains/power supply has to be equipped with a residual current circuit breaker.
Mechanical	Use the safety fastening kit for fixing the incubator or 2 stacked incubators to the wall.
CO_2 gas	Cylinder with 100 % CO_2 vapor withdrawal, together with a two-stage regulator for pressure control between 0.05 MPa and 0.15 MPa (7.2–21.8 psi, 0.5–1.5 bar)

Keep the packing and the transport securing device for later transport or storage.

4.2 Selecting the location

CAUTION! Lack of safety due to humid storage and transport conditions

- Evaluate the device for condensation, when received and unpacked for installation.
- If condensation due to storage and transport in humid conditions has occurred, allow the device to dry out for 12 hours in an environment of 18–28 °C and 20–80 % relative humidity. Only with a drying-out process is the device able to meet safety requirements.

NOTICE! Damage due to overheating

- Do not place the device close to sources of heat (e.g., radiator, drying cabinet).
- Do not expose the device to direct sunlight.
- Ensure that all sides of the device are in an adequate distance from the wall and adjacent devices to guarantee unobstructed air circulation.

The mains/power switch and cutting unit of the mains/power line must be easily accessible during operation (e.g., residual current circuit breaker).

The main gas valve must be easily accessible during operation.

Do not place the incubator directly on the floor as it will aspirate dust.

The CellXpert C170 fits on the workbench, under a workbench or it can be double-stacked to save space. Select a level surface capable of withstanding the operating weight of the incubator. The actual operating weight depends on both the options installed, and the material stored in the incubator.

Minimum floor space required
- Width: 81 cm (31.9 in)
- Depth: 60 cm (23.6 in)
- Height: 95 cm (37.4 in)

Optimal distance
- 15 cm (6 in) at the door hinge side (opening of 90°)
- 10 cm (4 in) at the opposite side for mounting the lifting handles

The correct location features
- a minimum ventilation clearance of 5 cm (2 in) to the left and to the right
  a minimum ventilation clearance of 5 cm (2 in) upward
  a minimum ventilation clearance of 3 cm (1.2 in) at the rear side
- a minimum clearance of 5 cm (2 in) on the right side to use the mains/power switch
- protection from direct sunlight
- protection from vibrations
- a clear distance to heat sources, e.g., heaters, autoclaves, or drier compartments
- a clear distance to airflow of heating, air-conditioning ducts, or other drafts
- a clear distance to cold sources, e.g., ultra-low temperature freezers
- an even, stable ground to avoid the device falling down

The electrical connections feature
- a matching of the mains/power connection with the specifications on the name plate
- access to the cutting unit of the power system circuit (to unplug the mains/power cord) during operation

Unplug the device to completely disconnect it from the power source. Install the device in a way that allows easy access to the mains/power plug in case of emergency.

4.3 Positioning the incubator

WARNING! Danger due to strong magnetic field
Magnetic fields may affect pacemakers and defibrillators. Pacemakers may be reset.

- Keep a distance of at least 20 cm from the magnet.

CAUTION! Risk of injury from lifting and carrying heavy loads

- At least 4 people are required to safely lift the incubator.
- Use a transport aid for transporting the incubator.

CAUTION! Risk of personal injury

- The incubator has a high center of gravity. Make sure that it does not topple over when it is moved.

NOTICE! Damage to the incubator
Lifting the incubator by the door will cause permanent damage to the incubator.

- Lift the incubator only by the lifting handles.
- Never lift the incubator by its door.

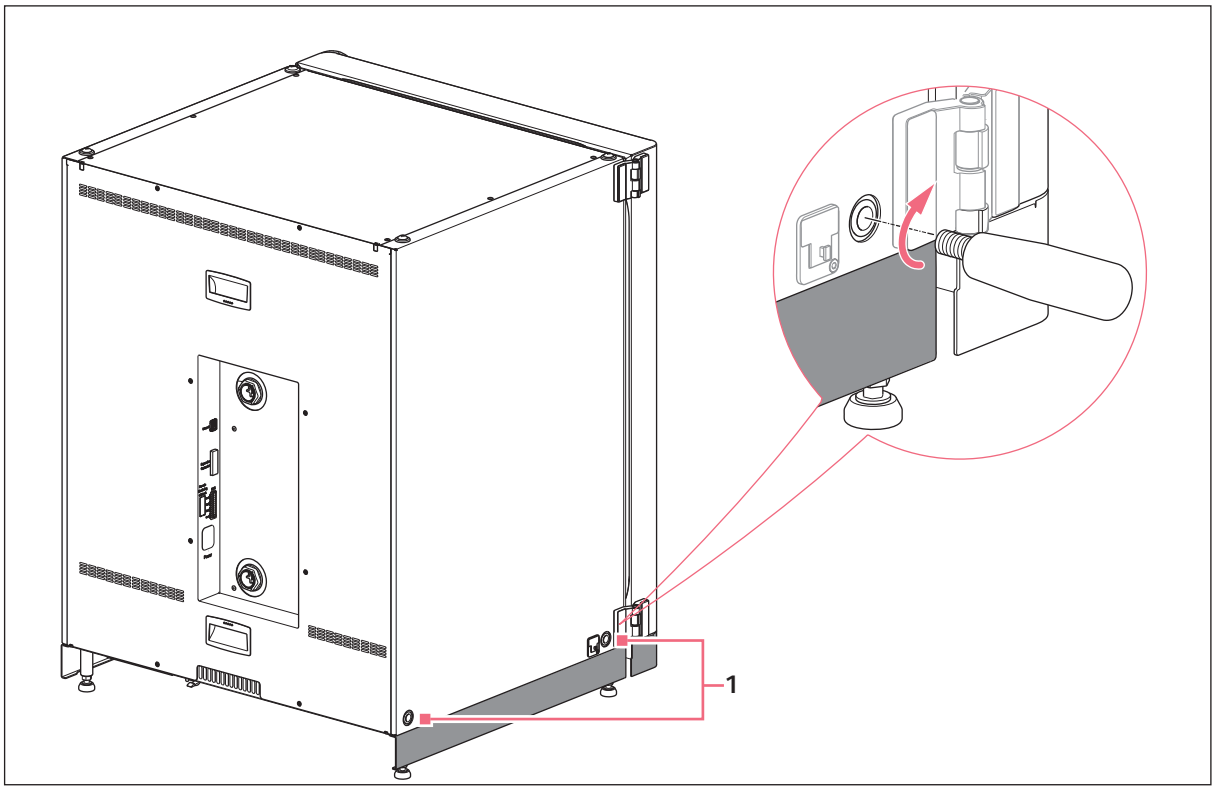

1 Holes for lifting handles

1. Install the 4 lifting handles into the tapped holes.
2. Carefully move the incubator to the operational location using the lifting handles.
3. Check to ensure that the door cable is not pinched and may be moved.

For non-slip application use the supplied non-slipping caps:

1. Lift the incubator on one side with the lifting handles.
2. Place a non-slipping cap under each of the 2 incubator feet.

3. Repeat the procedure on the other side of the incubator.
4. Remove the lifting handles and store them for further use.
5. Install the cover caps into the tapped holes on both sides of the incubator.

4.4 Initial setup

4.4.1 Leveling the incubator

Prerequisites

A spirit level with the ends facing to the left and to the right is placed on one shelf.

Do not place the spirit level on the housing.

NOTICE! Risk of material damage
Due to an unleveled device, it is possible that not all cells are covered with the medium. This could cause the loss of sample.

- Level the device by adjusting its feet.

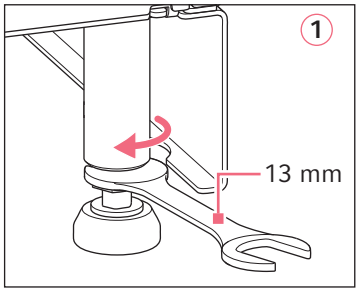

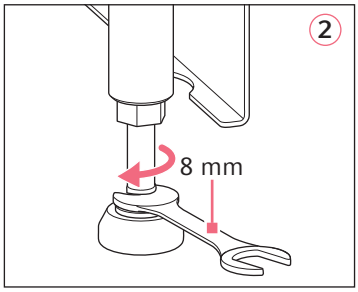

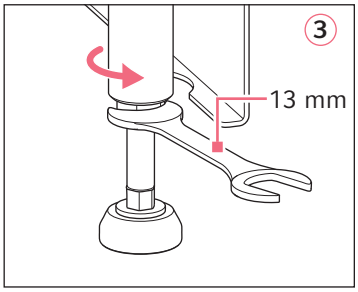

1. Loosen the lock nut with the supplied wrench of 13 mm.
2. Adjust the leveling feet with the wrench of 8 mm until the incubator is level and stable.
3. Turn the spirit level so that the ends face forward and rearward.
4. Level the incubator by adjusting the height of the feet.
5. Place the spirit level on other shelves. Adjust the height of the feet if necessary.
6. Lock the leveling feet by tightening the locking nuts on each foot with the wrench of 13 mm.

4.4.2 Fixing the incubator

WARNING! Risk of personal injury and equipment damage
If the incubator is not fixed with a safety latch, it may topple.

- Each incubator or stack of two incubators on a stacking stand must be fixed to the wall with a safety latch.

1. Disconnect the upper and the lower part of the magnetic safety latch by pushing them aside from each other.

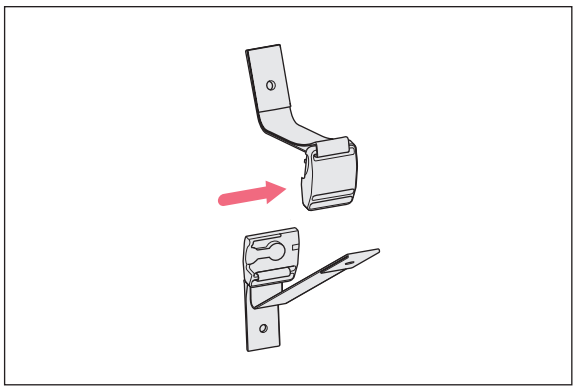

2. To attach the lower part of the safety latch to the top side of the incubator, use the spare part screw M4x8, Torx 20, and a washer.

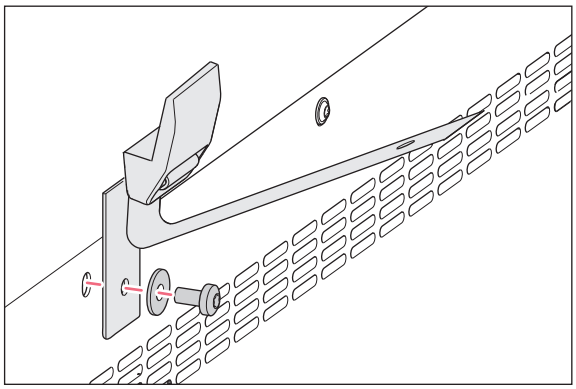

3. Attach the other part of the safety latch and a washer to the wall. The screw must have a pullout strength of at least 250 N (25 kg).

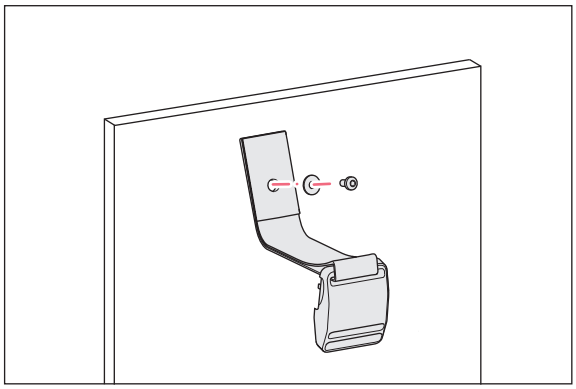

4. Click the two parts of the magnetic safety latch together.

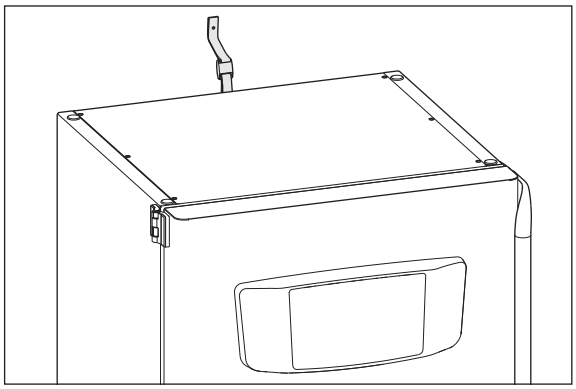

5. Fasten the belt. Do not fasten too tightly.

4.5 Making connections

4.5.1 Electrical connection

WARNING! Risk from incorrect voltage supply.

- Only connect the device to voltage sources which correspond with the electrical requirements on the name plate.
- Only use sockets with a protective earth conductor.
- Only use the mains/power cord supplied.

WARNING! High voltage

- Always make sure that this equipment is properly earthed/grounded.

Do not use a multiple socket extension cord.

- Make sure that the voltage requirements match the information on the name plate.
- Incubators with 100 V – 127 V: Connect only 1 device to 1 fuse.
- Incubators with 220 V – 240 V: Connect up to 2 devices to 1 fuse.
- Use the mains/power cord supplied to connect the incubator to the correct mains/power supply voltage.

4.5.2 Gas connection

DANGER! Unconsciousness and death by elevated levels of CO_2
Elevated levels of CO_2 may be found in the operating area of the CO_2 incubator.

- Wear personal protective equipment.
- If the laboratory is not properly ventilated, use a CO_2/O_2 alarm system.
- Check the tube connection system with a leakage test.
- Read the *Information on performing a risk assessment for the operation of incubators with CO_2 and N_2* from Eppendorf AG.

WARNING! Lack of safety due to incorrect gas installation or insufficient ventilation

- Only trained personnel may install and connect the gas tubing.

WARNING! Risk of suffocation

- Observe the national guidelines on handling gases and on the equipment and operation of laboratories.
- Prevent a too high concentration of CO_2 in breathing air while working in the laboratory.

NOTICE! Risk of material damage
The gas tubing and in-line gas filter will burst or crack due to high pressure.

- Incoming CO_2 gas pressure must not exceed 0.15 MPa (1.5 bar, 21.8 psi).

The main gas valve must be easily accessible during operation.

Do not bend the gas tubing.

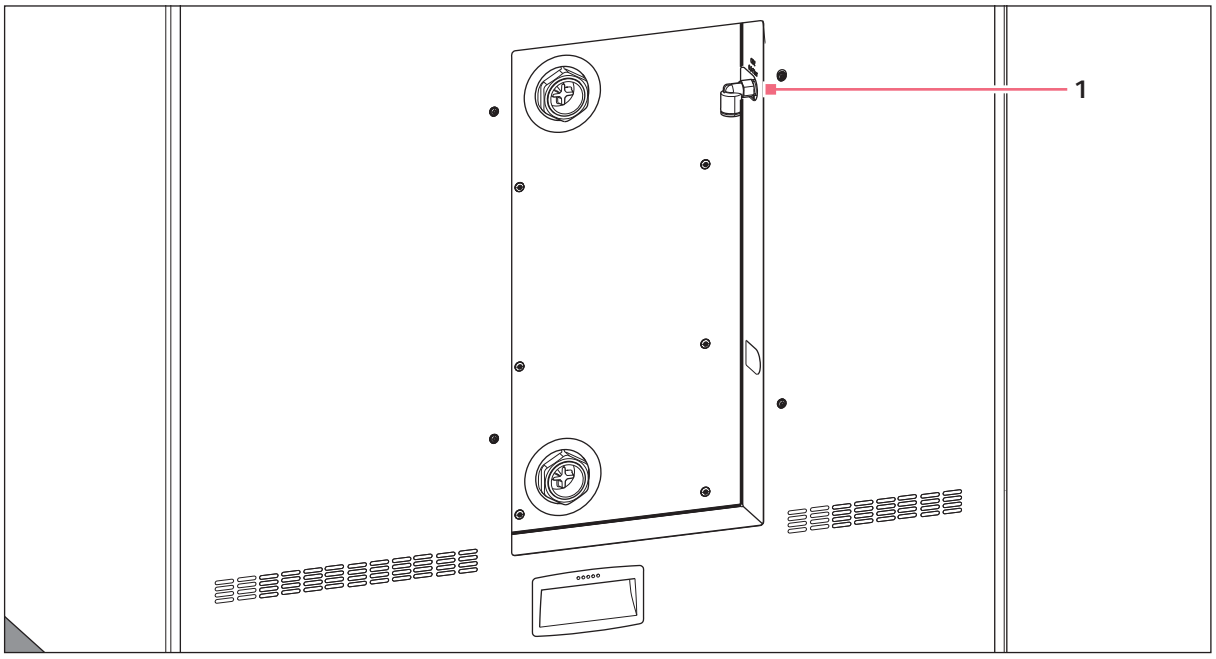

Fig. 4-1: Connection at the rear of CellXpert C170

1 CO_2 tube connector

1. Attach the supplied gas tubing with the in-line gas filter to the CO_2 tube connector at the rear of the incubator and to the pressure regulator outlet. Push the gas tubing into the tube connector until it stops. Check if the gas tubing is fixed by lightly pulling on it. It must not move. Secure the connected end at the pressure regulator.
2. A large-size cylinder of CO_2 with vapor withdrawal is required to supply the incubator. The cylinder controls primary gas pressure. Fitting a two-stage CO_2 pressure regulator is recommended.
3. Check the pressure settings of the CO_2 connections.

   A default pressure setting for CO_2 of 0.1 MPa (14.5 psi, 1 bar) or in the range of 0.05–0.15 MPa (7.2–21.8 psi, 0.5–1.5 bar) is recommended, (see *Preparing for operation on p. 35)*.

4. To disconnect the gas tubing, switch off the gas pressure and press down the small ring of the tube connector and pull out the gas tubing.

4.5.3 Ethernet connection

Only connect devices that meet the safety requirements defined in IEC 60950-1.

The device is equipped with an Ethernet interface. The interface allows you to connect the device to an external monitoring system, e.g., a building management system or a laboratory management system. The interface provides data about the current status and the identity of the device. Contact your local Eppendorf

partner for more technical information. Connections must have a double or reinforced insulation, according to DIN EN 61010-1.

Use CAT 5 STP with shielded RJ45 connectors as network cable. The cable must be connected to a grounded RJ45 jack.

4.6 BMS relay contact alarm

Only connect devices that meet the safety requirements defined in IEC 60950-1.

The connection to the BMS (Building Management System) allows the centralized monitoring of the device. Alarm sources are programmable in the menu.

The system is activated by alarm conditions:

- temperature alarm
- CO_2 alarm
- warnings
- errors
- power failure

If mains/power supply voltage fails or the device is being switched off, all relays switch to alarm: Common and normally open contacts are connected.

The system is connected via a 12-pin connector at the rear of the incubator. The matching plug is provided.

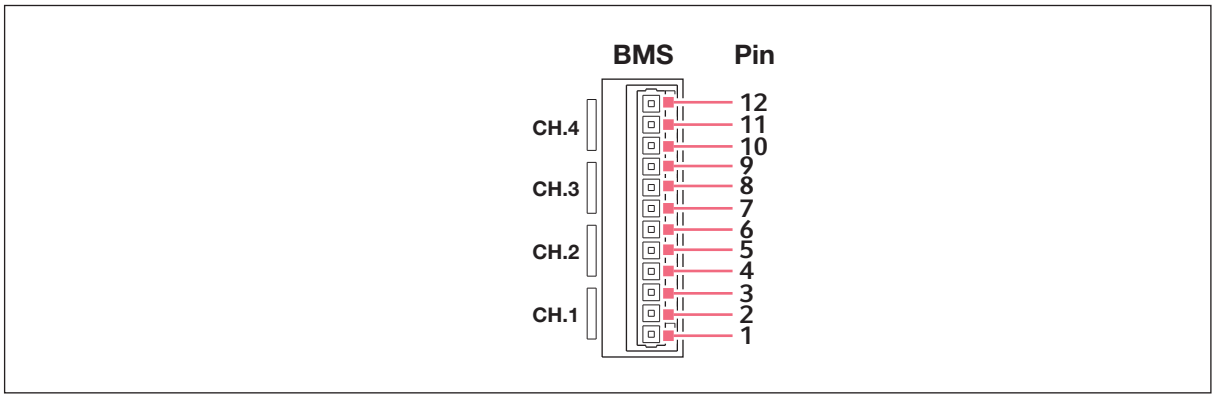

Fig. 4-2: BMS connector

Pin	Designation
1	Channel 1 common
2	Channel 1 normally closed
3	Channel 1 normally open
4	Channel 2 common

Pin	Designation
5	Channel 2 normally closed
6	Channel 2 normally open
7	Channel 3 common
8	Channel 3 normally closed
9	Channel 3 normally open
10	Channel 4 common
11	Channel 4 normally closed
12	Channel 4 normally open

The relays must not be operated at more than 2 A and 30 V DC/AC.

Tab. 4-1: Default settings are:

Channel 1 (relay 1)	All temperature alarms
Channel 2 (relay 2)	All CO_2 alarms
Channel 3 (relay 3)	All warnings
Channel 4 (relay 4)	All errors

The alarm sources for the channels cannot be changed.

4.6.1 Incubator operating with and without alarm

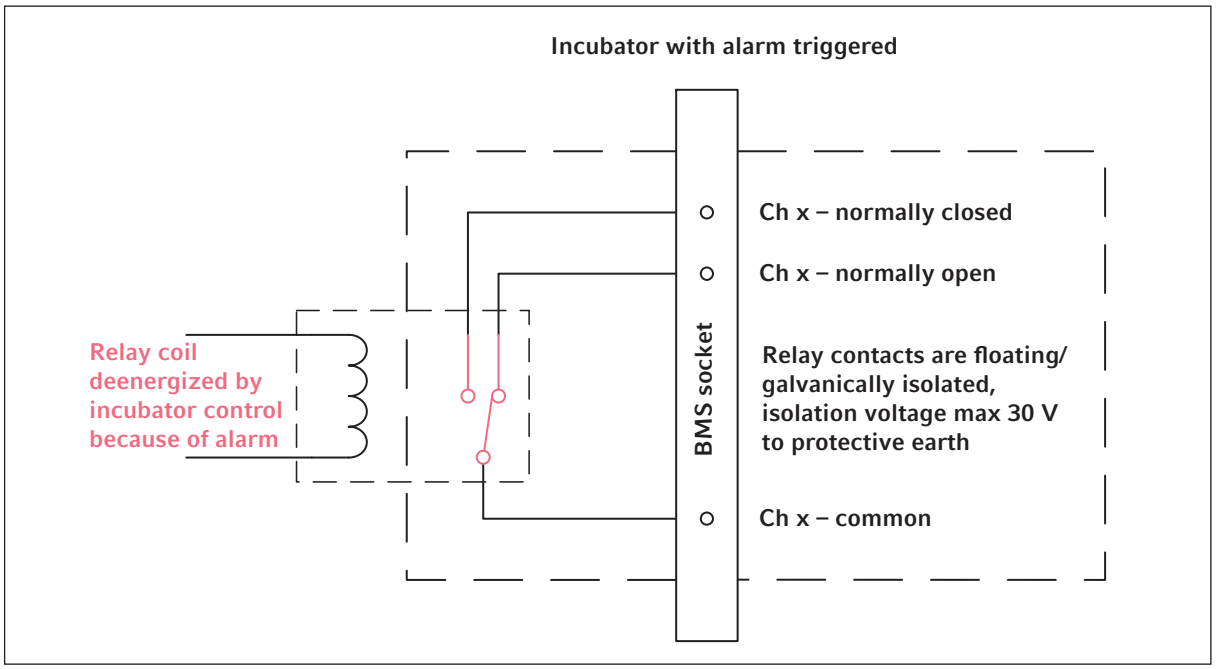

Fig. 4-3: Incubator operating with alarm

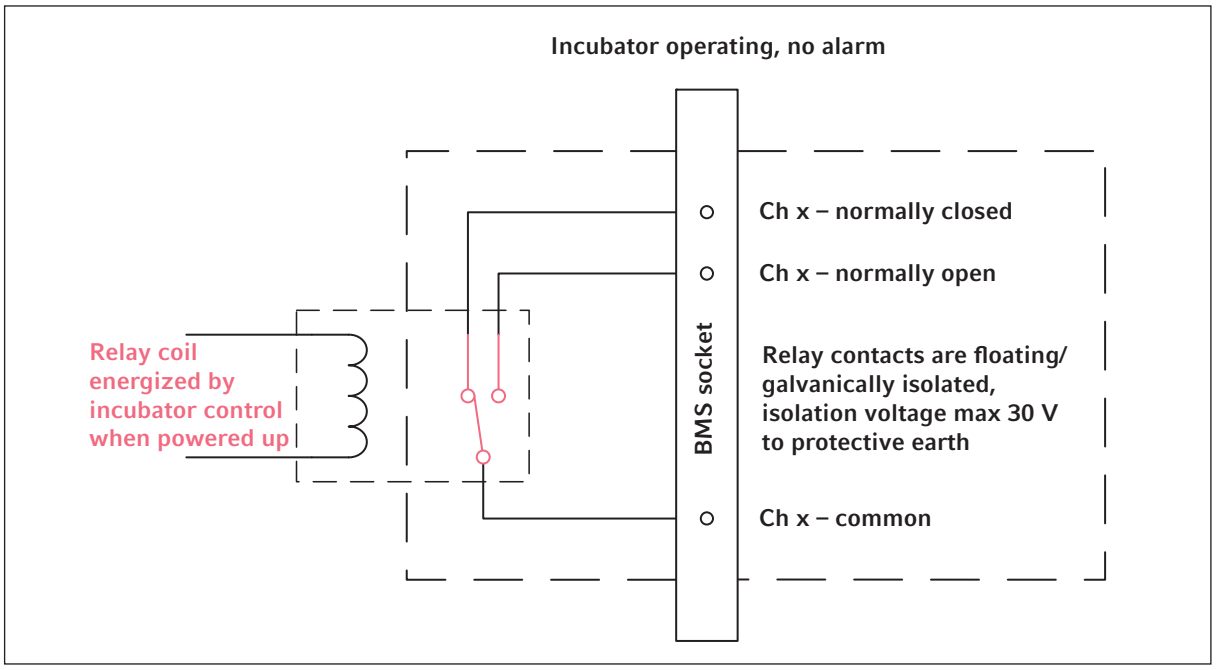

Fig. 4-4: Incubator operating without alarm

5 Operation

5.1 Preparing for operation

DANGER! Unconsciousness and death by elevated levels of CO_2
Elevated levels of CO_2 may be found in the operating area of the CO_2 incubator.

- Wear personal protective equipment.
- If the laboratory is not properly ventilated, use a CO_2/O_2 alarm system.
- Check the tube connection system with a leakage test.
- Read the *Information on performing a risk assessment for the operation of incubators with CO_2 and N_2* from Eppendorf AG.

NOTICE! Damage to electronic components due to condensation
Condensate can form in the device after it has been moved from a cool environment to a warmer environment.

- After installing the device, wait for at least 12 hours. Only then connect the device to the mains/power supply.

NOTICE! Risk of material damage
The gas tubing and in-line gas filter will burst or crack due to high pressure.

- Incoming CO_2 gas pressure must not exceed 0.15 MPa (1.5 bar, 21.8 psi).

After switching on the incubator, sensors have to initialize. It may take a few minutes until values are displayed.

1. Using the mains/power cord provided, connect the incubator to an earthed/grounded mains/power supply.
2. Turn on the CO_2 gas supply with the pressure regulator. Set the gas pressure to 0.1 MPa (1 bar, 14.5 psi).

   The CO_2 gas pressure range is adjustable between 0.05 MPa (flow pressure; 0.5 bar; 7.2 psi) and 0.15 MPa (pressure at rest; 1.5 bar; 21.8 psi).
   Open the stop valve completely to ensure an adequate volume flow.
   Ensure that the gas pressure and the volumetric gas flow rate are sufficient, especially if more than one device is connected to the CO_2 gas source.
3. The chamber setpoints are pre-programmed at 37 °C and 5 % CO_2.

   - The CO_2 sensor needs 30 minutes for initialization after the switch-on of the device. No process value is displayed during the initialization phase.
   - If power is interrupted to the incubator long enough for the temperature to drop below the setpoint, the CO_2 valve is deactivated until the temperature setpoint is achieved again. (The deactivation serves to avoid spurious CO_2 readings while the incubator is below its temperature setpoint).
4. Switch on the incubator using the on/off switch at the right side of the device. Leave the incubator on until the set chamber temperature and CO_2 concentration have been reached.

5. To allow conditions to stabilize, leave the incubator running for at least 2 hours (preferably overnight).

CO_2 sensors are calibrated at the factory to control accurately at 5 % CO_2 and 37 °C. Changing the temperature or the CO_2 setpoint leads to deviations in accuracy.

5.2 Functions and limitations

5.2.1 Temperature management

The temperature is adjustable from 22 °C to 50 °C. Incubators are meant to operate with 4 °C above ambient temperature at minimum. If the setpoint is below 4 °C above ambient temperature, the incubator tries to adjust the temperature. It is possible that a sensor error occurs after a certain period. Restart the incubator and adjust another setpoint.

Avoid condensation and reduce the temperature setpoint by:
- cooling down the incubator as fast as possible by opening the doors
- emptying and refilling the water tray with water with a maximum temperature of the new setpoint

5.2.2 CO_2

The CO_2 concentration is adjustable from 0.1 % to 20 %. It is possible to deactivate the gas control and to operate with temperature control only.

If you want to reduce the setpoint for the CO_2 concentration during the operation, let CO_2 escape by opening the outer and the inner door.

The sensors have to reinitialize after a switch-on of the device or after a high temperature disinfection took place. The status *Initializing Sensor* is described in the function areas. It is not possible to adjust a setpoint during this period.

5.3 Opening and closing doors

WARNING! Danger due to strong magnetic field
Magnetic fields may affect pacemakers and defibrillators. Pacemakers may be reset.

- Keep a distance of at least 20 cm from the magnet.

CAUTION! Cuts due to broken glass
A damaged glass door leads to cuts on the hands.

- Remove the broken glass with a suitable tool.

CAUTION! Risk of personal injury

- Before closing the glass door, be sure that the shelves are properly installed inside the chamber. Slamming the glass door against the shelf could cause broken glass and potential injury.

5.3.1 Opening the inner and the outer door

1. To open the outer door, pull the door handle.
   The hint "Door open" is displayed on the screen.
2. To open the inner door, pull on the inner door latch.

5.3.2 Closing the inner and the outer door

1. Close the inner door until it is fixed by the magnet.

   An incorrectly closed door could cause condensation.

2. Close the outer door until it is fixed by the magnets.

5.4 Using the water tray

NOTICE! Risk of material damage

- To avoid possible damage to the CO_2 sensor, never leave water in the water tray while the incubator is switched off, or when a high temperature disinfection cycle is initiated.

NOTICE! Risk of material damage due to spilled water
Spilled water could cause corrosion.

- To avoid possible damage to the device, observe the maximum capacity of the water tray.
- Do not move the device when the water tray is filled.

- Always leave the water tray in place.
- Use warm, distilled, sterile water only in the water tray. The usage of any other types of water including deionized water may cause corrosion inside the incubator.

1. Fill the water tray with 1.5–2.5 liters of warm, distilled, sterile water.
2. The usage of any biocide in the water tray is not recommended. To reduce the possibility of contamination, empty the tray every 7–14 days, clean it with a solution of 70 % isopropyl alcohol and 30 % distilled water, and then refill it with 1.5–2.5 liters of warm distilled, sterile water.

   The humidity level within the chamber is not adjustable. The chamber reaches between 85 % and 95 % relative humidity at 37 °C (depending on ambient humidity) with the water tray.

5.5 Using the access ports

It is possible to insert components, e.g., sensors, into the chamber via the access ports.

Prerequisites

- The component, e.g., sensor, with wire is placed in the chamber.
- Both of the access ports are closed with the blind plugs.
- Make sure that the component is not bigger than the inner diameter of 25 mm (0.98 in) of the access port.

1. Remove one of the blind plugs.
2. Pull the component wire through the open access port.
3. For optimal gas tightness, make a cut into the cover of the blind plug. Wrap the component wire around the plug.

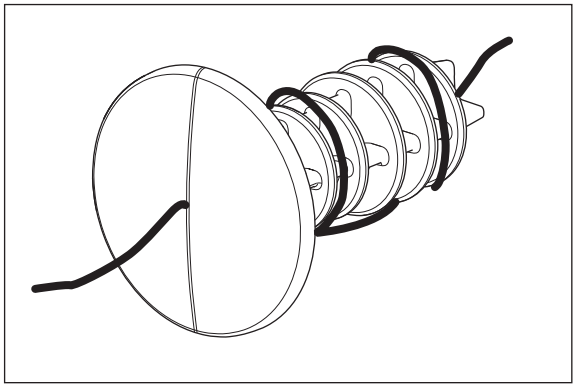

Fig. 5-1: Wire wrapped around the blind plug

4. Refit the blind plug. Make sure that the plug is securely fixed and flush with the rear panel.
5. Put the end of the wire on the top of the incubator.

Make sure that the access port is cleaned and dried before reinstallation of the plug.

5.6 Safety shutdown

NOTICE! Risk of material damage
The gas tubing and in-line gas filter will burst or crack due to high pressure.

- Incoming CO_2 gas pressure must not exceed 0.15 MPa (1.5 bar, 21.8 psi).

5.6.1 Temperature

The CellXpert C170 features a shutdown at 10 K over the setpoint of one heat circuit or 5 K below the setpoint according to standard **DIN 12880** (temperature limiter class 1).

- Restart the device.
- If the error occurs again, contact Eppendorf Service.

5.6.2 Gas

The inlet gas valve switches off above 2 bar.

5.7 Switching off the device

1. Switch off the device.
2. Disconnect the power cord.
3. Switch off the gas pressure.
4. Disconnect the pressure tube.
5. Empty the water tray.
6. Clean the device.
7. Let the incubator dry with opened doors.
8. Let the incubator cool down.

6 Overview of operating controls

6.1 Home screen overview

The display shows the temperature, the CO_2 percentage, and additional information.

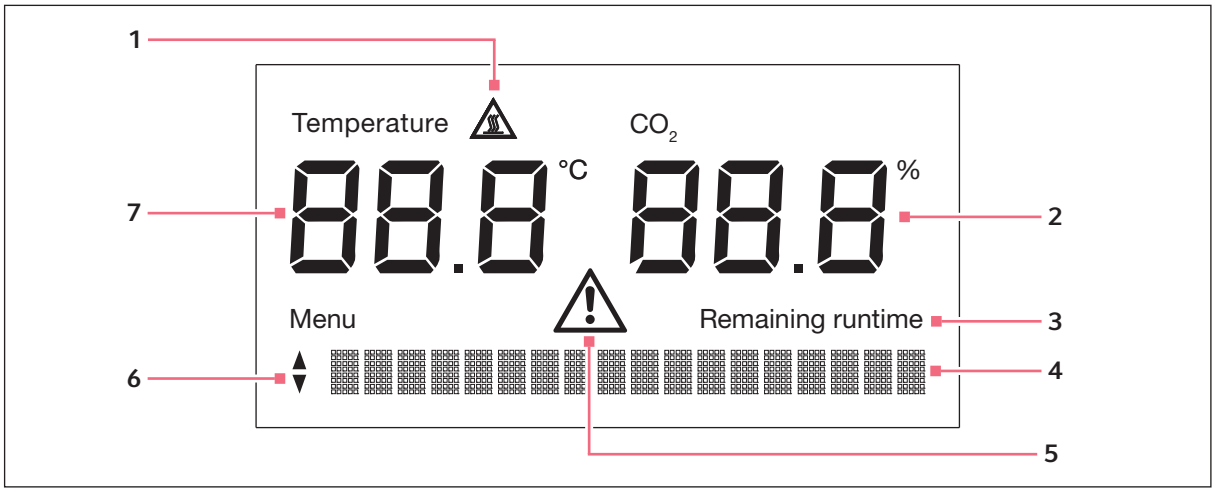

1 **Warning symbol for high-temperature disinfection (HTD)**
active above 50 °C

2 **CO_2 value in %**

3 **Estimated remaining run time**
active when using the HTD

4 **Display of menu or settings or error messages**

5 **Warning symbol**
active when error messages occur

6 **Up-down arrow for menu**

7 **Temperature value in °C**

6.2 Home screen in normal operation

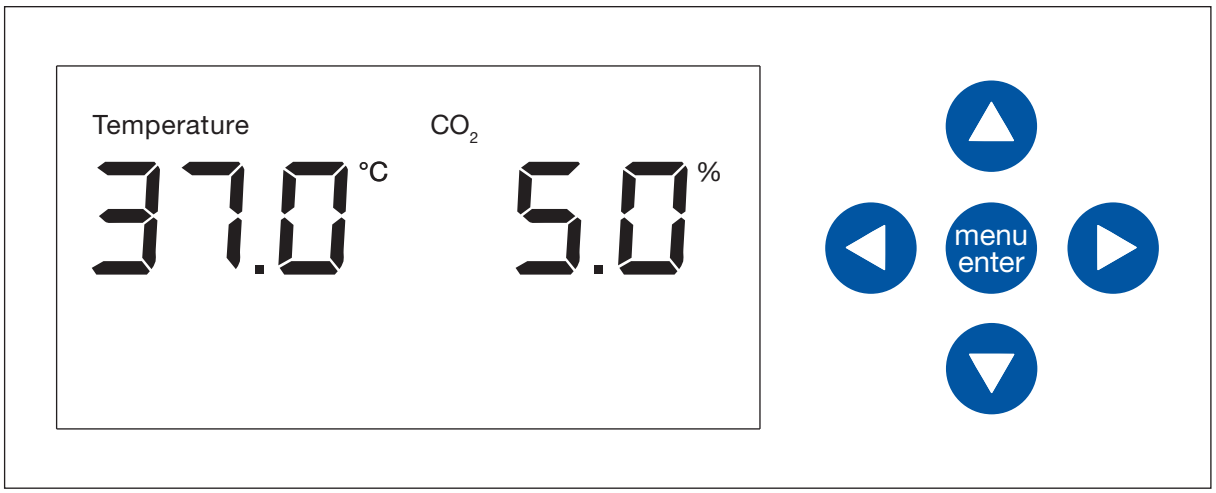

Fig. 6-1: Home screen and menu arrow keys

The display shows the temperature and the CO_2 percentage. The arrow keys are not usable during normal operation.

6.3 Menu

In the *Menu* area, you can adjust the settings for temperature and CO_2 concentration, and you can start the high-temperature disinfection.

Prerequisites
The *Home* screen is displayed.

- Press the menu/enter softkey.

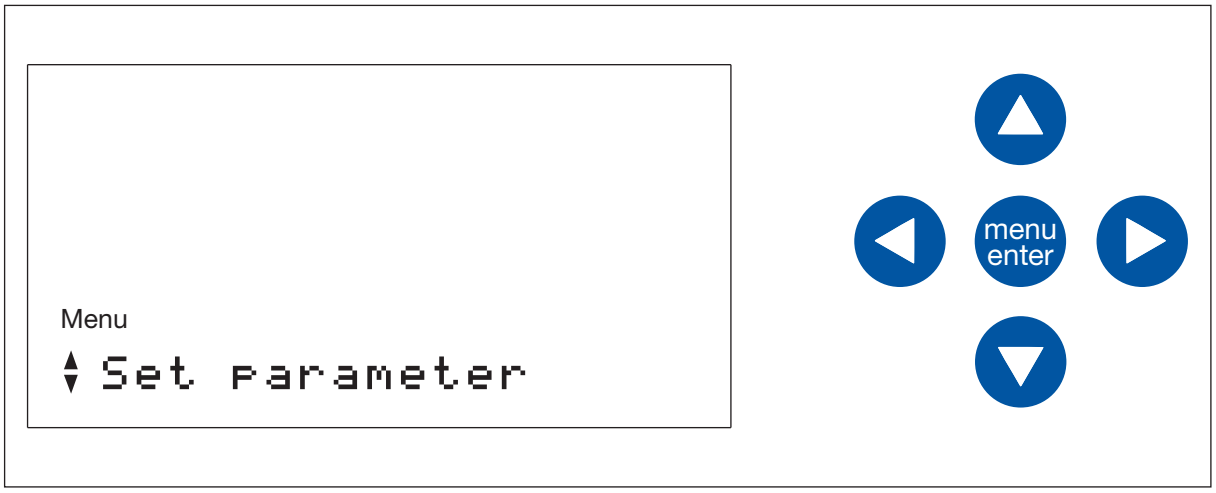

The first menu item *Set parameter* is displayed. You can navigate in the menu with the up and down arrow keys, indicated by the up-down arrows on the display.

Select your menu item with the menu/enter softkey.

The menu items are:
- Set parameter
- Disinfect
- About this device
- Service login
- Back

The menu item *Service login* is reserved for authorized service only.

To leave the *Menu* and get back to the *Home* screen, select the menu item *Back* with the arrow keys and the menu/enter softkey.

Alternatively, you can quit every menu item with the left arrow key.

6.4 Setting the parameter values

Prerequisites

The *Home* screen is displayed.

1. Press the menu/enter softkey.

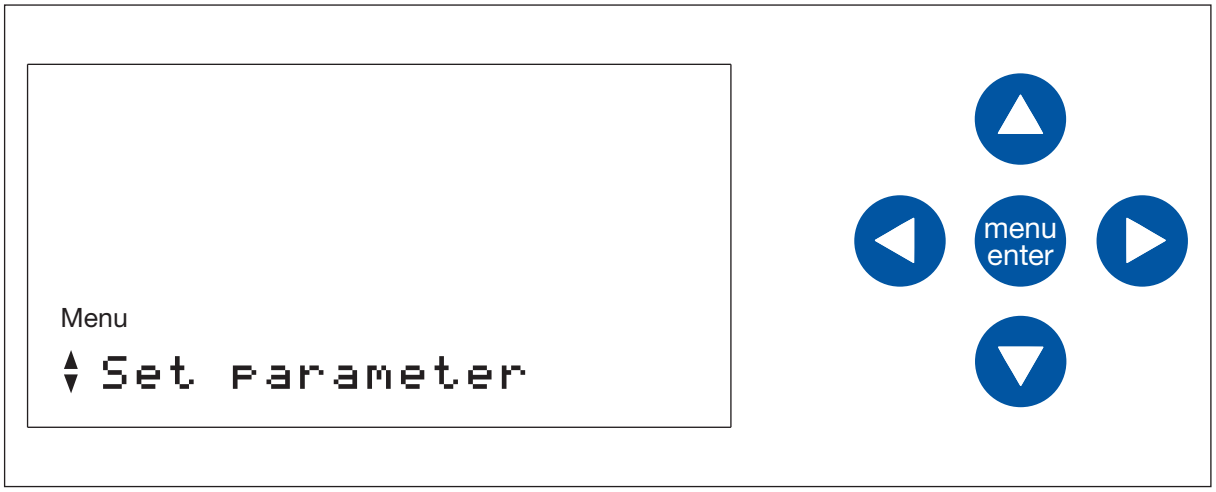

2. Press the menu/enter softkey.

The parameters are displayed. The adjustable parameter is blinking. To change the value, use the up or the down arrow key.

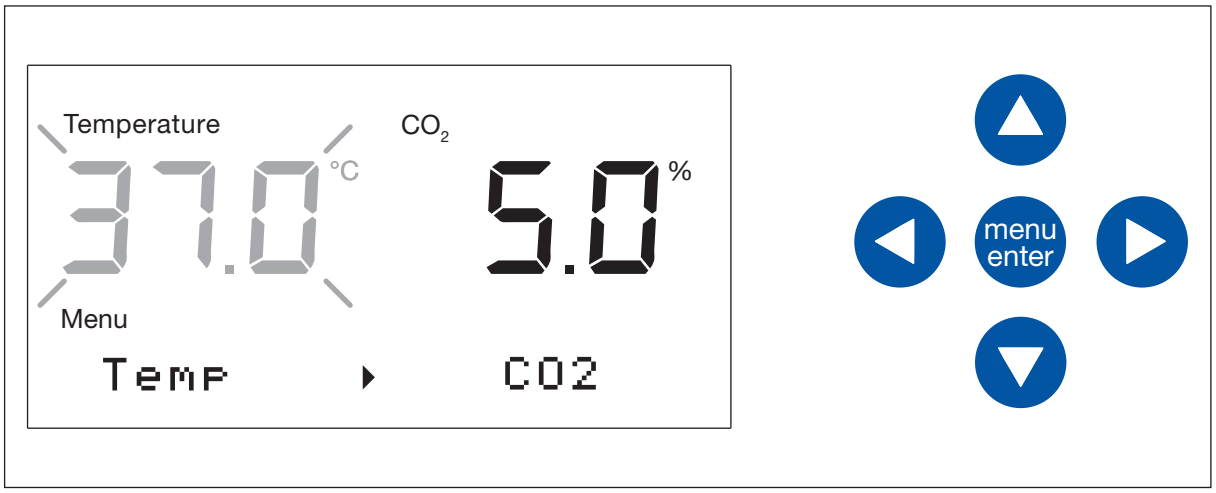

- The right arrow on the screen indicates that you can change to the parameter on the right by using the right menu arrow key.
- By using the up-down arrow keys, you can set the value.

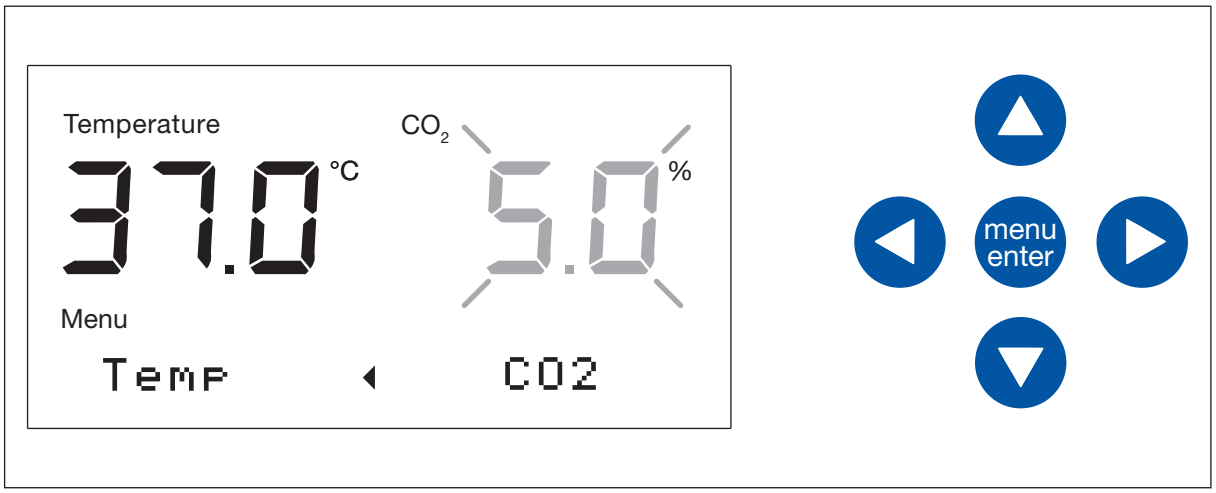

- The left arrow on the screen indicates that you can change to the parameter on the left by using the left menu arrow key.
- By using the up-down arrow keys, you can set the value.

6.4.1 Save the settings

▸ Press the menu/enter softkey.
The *Home* screen is displayed.

6.4.2 Exit without saving

▸ Press the left arrow key.
The *Home* screen is displayed.

6.5 Getting device information

1. To switch to the *Menu*, press the menu/enter softkey.
2. Press the down arrow key 3 times.

   "About this device" appears on the screen.
3. Press the menu/enter softkey.
4. To navigate through the menu items, use the up-down arrow keys:

   Serial number of the device
   Software version of the device
   Name of the device
   Back
5. To quit the menu, select the menu item *Back* and press the menu/enter softkey. Alternatively, you can quit with the left arrow key.

   The *Home* screen appears.

6.6 Error notifications

If there are several events at the same time, the most important event notification is displayed. After the confirmation of the first notification, the next notification is displayed. Up to 10 event notifications can be saved.

- To confirm the first displayed notification, press the menu/enter softkey.
- To confirm the second displayed notification, press the menu/enter softkey.
- If, for example, the notification "E292:CO2 pressure..." blinks and a warning sign is displayed: Confirm the notification.

An error notification is displayed until the error is resolved.

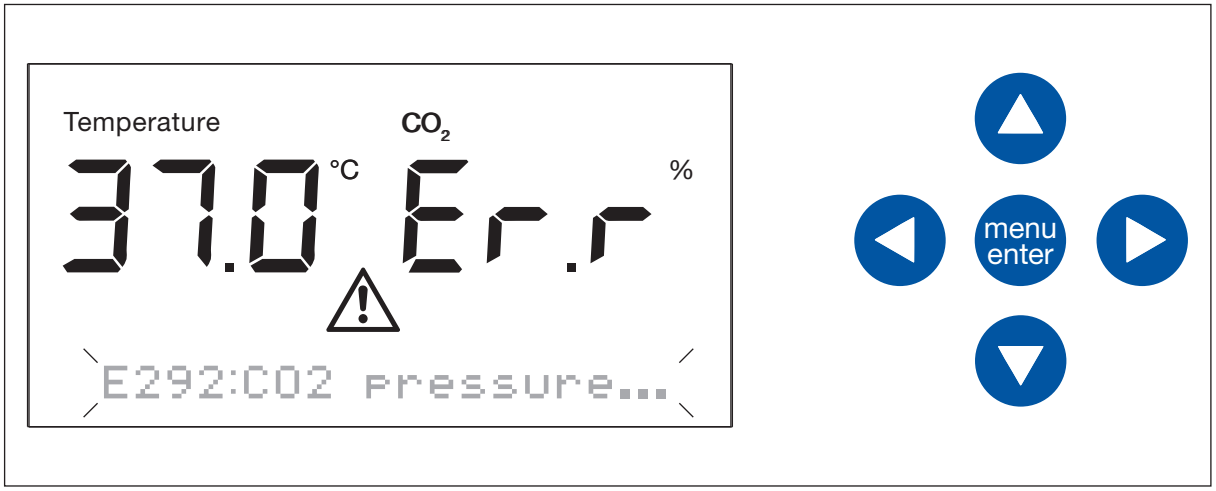

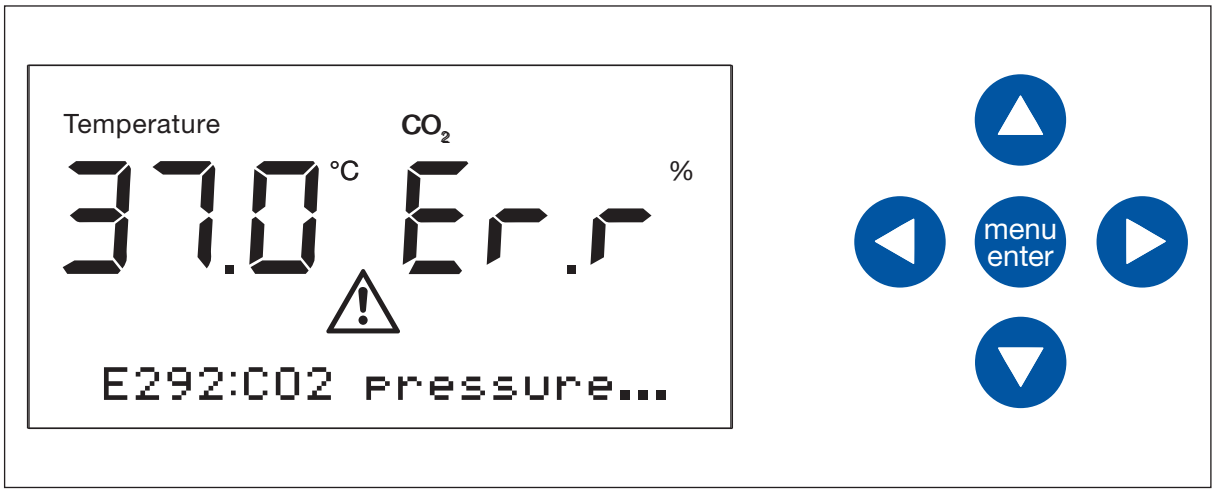

If you confirm an error notification, but the error is not resolved, a general error hint is displayed:

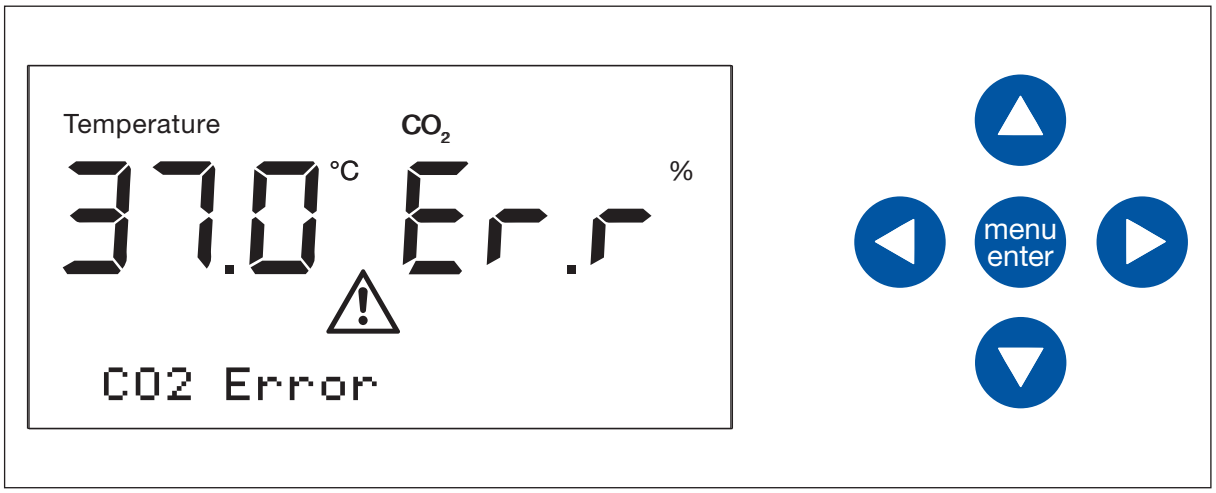

7 Maintenance

7.1 Routine maintenance

7.1.1 General

WARNING! Risk of injury to personnel or damage to equipment!

- Do not move 2 stacked incubators for maintenance or cleaning.

WARNING! Risk of injury to personnel or damage to equipment!

- While moving the incubator, ensure that the door is closed.
- Two trained persons are needed for moving an incubator.
- Risk of the device falling due to its high center of gravity.

WARNING! Risk of injury to personnel or damage to equipment

- While cleaning or disinfecting/decontaminating the chamber, take care not to break small sensors/other parts or destroy your protective gloves by wiping with too much force.

To ensure that chamber conditions remain stable, minimize the length of time that the door is open. When you open the door, wipe off any condensation that may have formed at the inner seal to avoid condensation build-up.

7.1.2 Daily checks

1. Check if the temperature level and the CO_2 level are within the specification.
2. Check the reserve pressure in the CO_2 cylinder (normally 725 psi (50 bar) when full). The design of the incubator ensures low consumption of CO_2. If there is a significant drop at the cylinder pressure, it means that the cylinder is almost empty and should be replaced. Make sure that there are no leaks at any of the connections. This helps to increase the lifetime of the CO_2 supply and to avoid accidentally running out of CO_2.
3. Clean any spills in the chamber immediately.
4. Routinely check the screen for any alarms or events that may have occurred.

7.1.3 Weekly checks

Clean and refill the water tray with an appropriate amount of warm, distilled, sterile water. The use of warm water will ensure a rapid return to optimum chamber conditions.

7.1.4 Monthly checks

Clean the exterior and interior of the device.

7.2 Exterior cleaning

DANGER! Risk of electric shock from spilled liquid

- Switch off the device and disconnect it from the mains/power supply before starting cleaning or disinfecting work.
- Do not allow any liquids to penetrate the inside of the housing.
- Do not spray the housing.
- Only connect the device to the mains/power supply, if it is completely dried.

NOTICE! Damage due to aggressive cleaning agent or sharp objects
Incorrect cleaning agents can damage the display, surfaces, and printing.

- Do not use corrosive cleaning agents, aggressive solvents, or abrasive polishes.
- Do not incubate the accessories in aggressive cleaning agents or disinfectants for an extended period of time.
- Do not use sharp objects to clean the device.

1. Clean the exterior of the incubator by wiping it over with a soft cloth, moistened with soapy water.
2. Wipe the exterior surfaces again with a rinsed cloth.

7.3 Disinfection/Decontamination

WARNING! Danger due to contact with decontamination agent.

- Wear protective equipment, gloves, and protective goggles during the cleaning process.
- Wear respiratory protection when aerosolization is suspected.

WARNING! Risk of personal injury or damage to equipment due to spilled infectious material

- Immediately decontaminate the exterior and the interior of the device, if infectious material was spilled.

WARNING! Risk of personal injury or damage to equipment

- While cleaning or disinfecting/decontaminating the chamber, take care not to break small sensors/other parts or destroy your protective gloves by wiping with too much force.

NOTICE! Corrosion due to aggressive cleaning agents and disinfectants.

- Do not use corrosive cleaning agents, aggressive solvents or abrasive polishes.
- Do not incubate the accessories in aggressive cleaning agents or disinfectants for a longer period of time.

NOTICE! Risk of material damage

- Never use any of the following substances to clean the stainless steel, it will result in damage: sodium azide, aqua regia, iodine, ferric chloride, or sulphuric acid.

NOTICE! Risk of material damage

- Do not spray disinfecting agent inside the chamber. Spraying will lead to sensor damage.

7.3.1 Preparing the disinfection/decontamination

The recommended disinfecting agent for use with the incubator is a solution of 70 % Isopropanol or Ethanol with 30 % sterile distilled water.

If you have any further questions regarding the cleaning and disinfection or decontamination or regarding the cleaning fluid to be used, contact the Eppendorf AG Application Support. The contact details are provided on the back of this manual.

7.3.2 Disinfecting the exterior

It is not necessary to switch off and disconnect the device, when cleaning and disinfection are part of the software-guided process of high-temperature disinfection.

1. Switch off the incubator.
2. Unplug the incubator from the mains/power supply.
3. Dampen a clean cloth with the alcoholic solution and wipe down all external surfaces, taking care to keep the alcoholic solution from coming into contact with any mains/electrical outlets or assemblies.

7.3.3 Disassembling the interior equipment

1. Remove the water tray from the chamber.
2. Remove the shelves, bottom to top.
3. Remove the tie rod from the shelf racks.
4. Remove the shelf racks.

7.3.4 Disinfecting/Decontaminating the interior

It is not necessary to switch off and disconnect the device, when cleaning and disinfection are part of the software-guided process of high-temperature disinfection.

1. Switch off the incubator.
2. Unplug the incubator from the mains/power supply.
3. Clean the water tray by rinsing it in sterile water, wiping it down with the alcoholic solution, and then rinsing it again with sterile water.

   To avoid liquid come into contact with the sensor or the sensor connection, wring out the cloth.

4. Wipe down the inside of the chamber with the alcoholic solution, and leave it to dry completely.
5. Wipe the internal components of the chamber twice with the alcoholic solution. Wipe off excess liquid and leave it to dry.
6. Wipe the inner door seal with the alcoholic solution, rinse, and leave it to dry.

7.3.5 Reassembling the interior equipment

1. Place the shelf racks inside the chamber. Ensure that the shelf rack spacers fit snugly to the side walls.

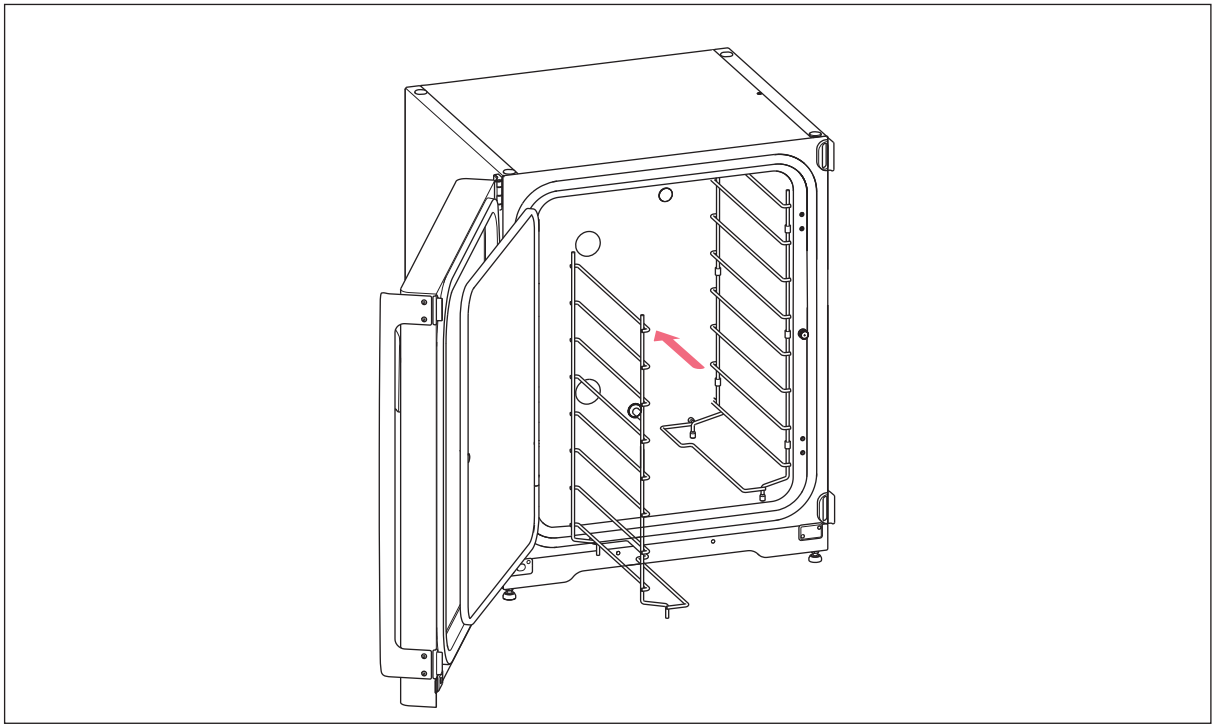

2. To stabilize the shelf rack, install the tie rod.

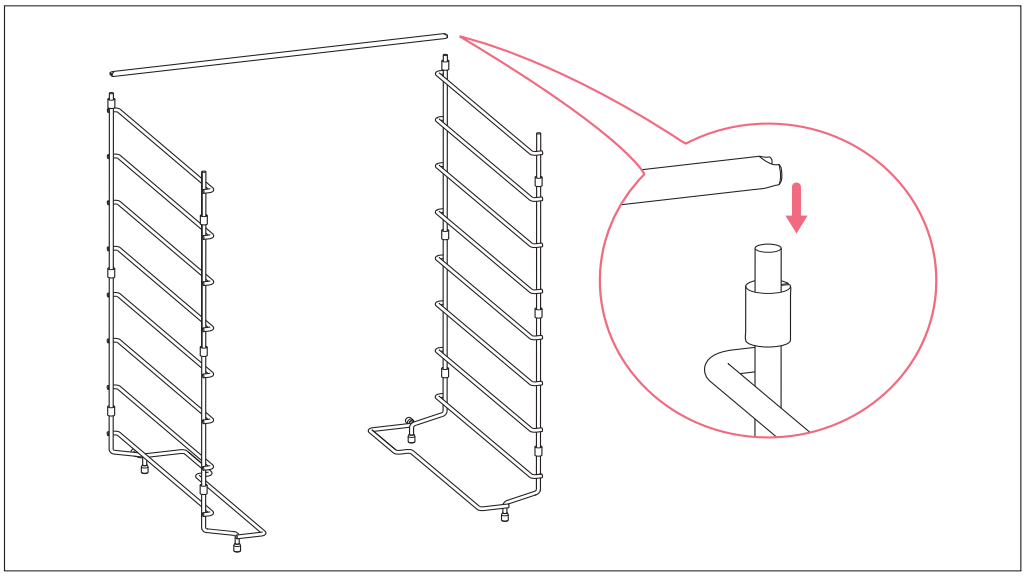

Do not forget to mount the tie rod. Shelves can wobble and samples can be lost, especially when using just one or two shelves.

3. Install the shelves, top to bottom. Ensure that each shelf's anti-tip groove is properly inserted (faced downward and to the rear of the incubator) onto each of the shelf rack guides.
4. Refill the water tray. Slide the water tray onto the lowest shelf rack support. Ensure that the water tray is pushed fully back.

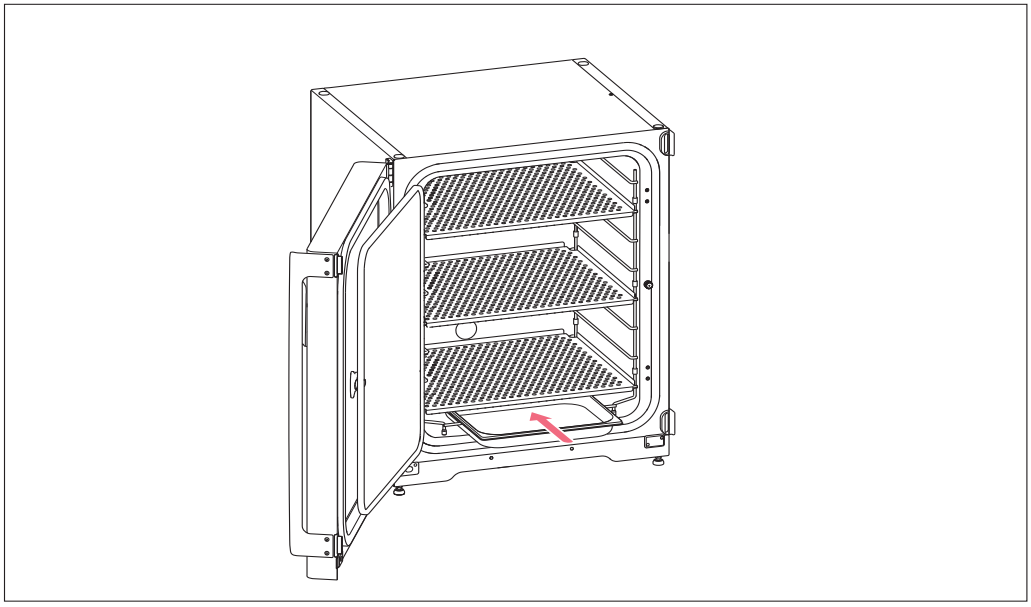

7.3.6 Putting into operation

1. Plug in the incubator and switch it on.
2. To allow conditions to stabilize, leave the incubator on for at least 2 hours (preferably overnight).

7.4 High-temperature disinfection (HTD)

WARNING! Risk of personal injury
Burns due to hot surface.

- Do not touch the equipment during the high-temperature disinfection cycle.
- Do not open the doors during the cycle.
- Do not open the doors after a system crash or a mains/power outage during the high temperature disinfection.

WARNING! Risk of personal injury
Scalding due to hot water.

- Remove water from the water tray before starting the high-temperature disinfection cycle.

WARNING! Risk of injury to personnel or damage to equipment

- While cleaning or disinfecting/decontaminating the chamber, take care not to break small sensors/other parts or destroy your protective gloves by wiping with too much force.

NOTICE! Risk of material damage

- Never let electrical equipment come into contact with the alcoholic solution.

NOTICE! Risk of material damage

- To avoid possible damage to the CO_2 sensor due to condensation, never leave water in the water tray while the incubator is switched off, or when an HTD cycle is initiated.

When using HTD for the first time, it may cause a smell to develop. Make sure that the location is ventilated.

To work contamination-free, clean and decontaminate the CO_2 incubator regularly.

Prerequisites

The samples have been taken out of the device.

The device is ready to operate.

The *Home* screen is displayed.

In order to obtain a successful result, keep the incubator doors closed until the HTD process is completed.
If doors are opened during an HTD, you are asked whether to continue or to cancel the process.

The estimated time remaining may vary depending on the target temperature and ambient conditions.

The incubator starts with heating up to 140 °C. The device holds the temperature for 2 hours. When exceeding 50 °C, the additionally warning symbol *Hot surfaces* is displayed. The display shows the estimated remaining run time. The HTD cycle takes approximately 13 hours.

1. Press the menu/enter softkey.
2. Press the down arrow key.

   The menu item *Disinfect* appears.
3. To select the menu item, press the menu/enter softkey.
4. To get to the next wizard screen, use the right arrow key. To get back to the *Home screen* use the left arrow key.
5. Empty the water tray.
6. Clean the chamber and all inserted parts.
7. To get to the next wizard screen, use the right arrow key. To get back to the last wizard screen, use the left arrow key.
8. To start the disinfection cycle, press the menu/enter softkey.
9. To finish the disinfection cycle and to confirm the message, press the menu/enter softkey.

   The *Home screen* appears.
10. Make sure that the water tray is filled with 1.5–2.5 L handwarm, sterile, destilled water.
11. To stop the HTD, press the menu/enter softkey. Answer the question “Quit: Yes/No” by choosing “Yes”. Opening the door also stops or aborts HTD.

8 Troubleshooting

8.1 General errors

Technical faults may be triggered by faults such as a power failure or power fluctuations. Therefore, it is sufficient to switch off the device briefly and switch it on after approximately 10 seconds. Check the cable connections if necessary.

If the suggested troubleshooting measures fail repeatedly, please contact your local Eppendorf partner. You can find the addresses on the webpage www.eppendorf.com/worldwide.

If there are several events, the most important event is displayed. After acknowledging the first event by pressing the menu/enter softkey, the next event is displayed. Up to 10 events can be held available.

Tab. 8-1: Door

Problem	Possible cause	Solution
Door alarm Door alarm is displayed with the alarm sign	Door is open longer than 30 seconds.	Close the door. Press the menu/enter softkey to switch off the sound.
W50: Long door ope...	Door is open longer than 5 minutes.	Close the door. Quit the warning note. The warning note for *Door open* will not be shown again.

Tab. 8-2: Temperature

Problem	Possible cause	Solution
Temp Low Alarm is displayed with the alarm sign	Door is opened too long.	Check the door opening time.
	Door was opened too often.	Check how often the door was opened throughout a day.
	Due to high impact of cold samples, the temperature setpoint could not be reached in a specific time span.	Use a prewarmed medium. Use a smaller number of cold samples.
	(Permanent) airflow due to open window or open door or air condition device.	Relocate the incubator to a more suitable place. Relocate the air condition. Stop the airflow.

Problem	Possible cause	Solution
Temp High Alarm is displayed with the alarm sign	Temperature setpoint was decreased without opening doors.	To let the incubator cool down, open the outer and the inner door.
	Due to high impact of hot samples, the temperature setpoint could not be reached in a specific time span.	Use a colder medium. Use a smaller number of hot samples.
	(Permanent) airflow due to open window or open door or air condition device.	Relocate the incubator to a more suitable place. Relocate the air condition. Stop the airflow.
	Another hot device is too close to the incubator.	Relocate the incubator to a more suitable place. Relocate the heat emitting device. Check the distance between the devices. Increase the distance if necessary.
	A heat emitting device was inserted into the incubator and generates too much heat.	Take out the heat emitting device. Increase the upper alarm limit.
Temp error	The temperature control has recognized an error and is deactivated.	Wait or change the temperature setpoint. Restart the device. Contact your local Eppendorf partner.
E102:Call service	Temperature information error.	Restart the device. Contact your local Eppendorf partner.
E107:Restart device	The incubator is located in a cold room < 16 °C.	Let the incubator acclimate at least 12 h after shipment.
	Sensor defect.	Contact your local Eppendorf partner.
W108:Setpoint not...	Ambient temperature is close to the temperature setpoint (less than 4 °C difference). Ambient temperature is above the temperature setpoint.	Change the setpoint to a higher temperature (>= 4 °C above ambient temperature). Reduce the ambient temperature to >= 4 °C to the temperature setpoint, e.g., by venting the room.
W109:Temp not rea...	Technical fault.	Restart the device.
E110:Restart device	The temperature setpoint for the HTD was not reached in time.	Check environment conditions. Switch off and restart the device.
	The water tray is not empty.	Empty the water tray. Restart the HTD.
	Technical fault.	Contact your local Eppendorf partner.

Problem	Possible cause	Solution
E111:Restart device	The incubator features a shutdown at 10 K above the setpoint of a heat circuit according to standard DIN 12880. (Temperature limiter class 1).	Restart the device. Increase the temperature setpoint to >= 4 °C above ambient temperature. Reduce the ambient temperature to >= 4 °C to the temperature setpoint, e.g., by venting the room. Contact your local Eppendorf partner.
E112:Call service	The incubator features a shutdown at 5 K under the setpoint of a heat circuit according to standard DIN 12880. (Temperature limiter class 1).	Restart the device. Contact your local Eppendorf partner.

Tab. 8-3: CO_2

Problem	Possible cause	Solution
" ini " No CO_2 value displayed	**" ini "** is displayed after (re-)starting the incubator or after high temperature disinfection.	Wait until the incubator is running in the normal mode.
CO2 High Alarm is displayed with the alarm sign	CO_2 set parameter decreased. CO_2 cannot pass off the incubator.	Open the outer and the inner door to let CO_2 pass off the incubator.
CO2 Low Alarm is displayed with the alarm sign	CO_2 set parameter increased.	CO_2 concentration cannot recover in time: Check the pressure supply.
CO2 error	CO_2 control has detected an error. CO_2 control is deactivated.	Wait or change the CO_2 setpoint. Restart the device. Contact your local Eppendorf partner.
W202:CO2 sensor h...	CO_2 sensor has been switched off due to high temperature. The incubator was restarted with a too high residual temperature after the HTD has been interrupted.	Let the incubator cool down to <50 °C before restarting the HTD.
E203:Call service	The initialization of the CO_2 sensor failed after switching on the incubator.	Restart the device. Contact your local Eppendorf partner.
E204:Call service	The measured CO_2 value is above the allowed range or the measured CO_2 value is below the allowed range.	Restart the device. Contact your local Eppendorf partner.

Problem	Possible cause	Solution
W205:CO2 sensor s... or **W205:CO2 sensor s...** or **W205:CO2 sensor z...** or **W205:CO2 sensor r...**	CO_2 sensor settings not saved.	Restart the device. Contact your local Eppendorf partner.
W212:Open inn.door	CO_2 set parameter decreased. CO_2 cannot pass off the incubator.	Open the outer and the inner door to let CO_2 pass off the incubator.
W213:CO2 control... or **E213:Call service**	CO_2 control loop took too long or CO_2 control loop aborted.	Check gas supply for leakage. Check if access port is closed. Restart the device. Contact your local Eppendorf partner.
E214:Call service	CO_2 value error.	Check gas supply for leakage. Check if access port is closed. Restart the device. Contact your local Eppendorf partner.
E215:Call service	CO_2 recovery timeout.	Check gas supply for leakage. Check if access port is closed. Restart the device. Contact your local Eppendorf partner.
W291:CO2 <0.04 MPa	CO_2 pressure below warning level of 0.04 MPa. CO_2 cylinder is almost empty.	Check CO_2 supply. Exchange CO_2 cylinder and adjust gas supply to 0.1 MPa (or range of 0.05 MPa to 0.15 MPa). Check gas connection on disconnection or leakage, e.g., in-line gas filter, gas connection.
	The volumetric flow rate is too low.	Increase the volumetric flow rate, e.g. by opening the CO_2 gas stop valve.
E292:CO2 <0.02 MPa	CO_2 pressure below warning level of 0.02 MPa. CO_2 cylinder is empty or disconnected.	Check CO_2 supply. Exchange CO_2 cylinder and adjust gas supply to 0.1 MPa (or range of 0.05 MPa to 0.15 MPa). Check gas connection on disconnection or leakage, e.g., in-line gas filter, gas connection. Ventilate the room, if necessary.
	The volumetric flow rate is too low.	Increase the volumetric flow rate, e.g. by opening the CO_2 gas stop valve.

Problem	Possible cause	Solution
E293:CO2 >0.18 MPa	CO_2 pressure above alarm level of 0.18 MPa. The inlet valve is closed due to the high pressure.	Reduce the CO_2 pressure to 0.1 MPa (14.5 psi, 1 bar) or to the range of 0.05–0.15 MPa (7.2–21.8 psi, 0.5–1.5 bar). Release the pressure from the gas tubing leading to the incubator. To disconnect the gas tubing, switch off the gas pressure, press down the small ring of the tube connector, and pull out the gas tubing.

Tab. 8-4: High temperature disinfection (HTD)

Problem	Possible cause	Solution
E110:Restart device	Temperature for HTD not reached in time.	Check environment conditions. Switch off and restart the incubator. Restart the HTD.
	The water tray is not empty.	Empty the water tray.
	Technical fault.	Contact your local Eppendorf partner.
W202:CO2 sensor h...	CO_2 sensor has been switched off due to high temperature. The incubator was restarted with a too high residual temperature after the HTD has been interrupted.	Let the incubator cool down to <50 °C before restarting the HTD.
E750:HTD error...	Error occurred during the HTD.	Restart the device. Contact your local Eppendorf partner.
E751:HTD interrup...	HTD interrupted due to power loss.	Restart the device. Contact your local Eppendorf partner.
W753:Door has bee...	Door has been opened during HTD. HTD was interrupted or aborted.	Restart the HTD. Wait until temperature has decreased to normal value.

Tab. 8-5: Technical errors

Problem	Possible cause	Solution
W600 – W699	Technical fault.	Contact your local Eppendorf partner.
W700:Check power	Voltage fluctuation.	Check mains/power supply. Contact your local Eppendorf partner.
E701:Wrong voltage	Incorrect mains/power voltage range.	Check mains/power supply.
E702:Wrong voltage	Unknown mains/power voltage range.	Check mains/power supply.

Problem	Possible cause	Solution
E703:Sensor error	A sensor is out of order or a sensor is not connected correctly.	Contact your local Eppendorf partner.
E704:Restart device	Technical fault.	Contact your local Eppendorf partner.
W921 – E999	Technical fault.	Restart the device. Contact your local Eppendorf partner.

Tab. 8-6: General errors

Problem	Possible cause	Solution
Sample is partially dry	Shelves are not properly leveled.	Level the incubator by placing a spirit level on a shelf: • aligned left to right • aligned front to rear Add more medium to the cells.
	No water in the water tray.	Check the water tray weekly. Refill it or clean and refill it weekly.
Sample evaporation	Low humidity due to empty water tray.	Check the water tray weekly. Refill it or clean and refill it weekly.
Circular cell growth in cell-culture dish	Vibrations from other devices result in sample vibrations.	Check if vibration generating elevators or devices like freezers or centrifuges are too close to the incubator, see *Installation*.
Sample contaminated	Consistent contamination.	Perform an HTD.
	Contamination of sample.	Check your sample handling. Check for contamination during your application steps.

9 Transport, storage and disposal

9.1 Transport

CAUTION! Risk of injury from lifting and carrying heavy loads

- At least 4 people are required to safely lift the incubator.
- Use a transport aid for transporting the incubator.

CAUTION! Risk of tipping over
Stacked incubators may topple during transport.

- Do not move 2 stacked incubators.

NOTICE! Damage as a result of incorrect packing.
Eppendorf AG is not liable for damage caused by improper packing.

- The device may only be stored and transported in its original packing.

NOTICE! Damage to the incubator
Lifting the incubator by the door will cause permanent damage to the incubator.

- Lift the incubator only by the lifting handles.
- Never lift the incubator by its door.

9.1.1 Conditions of transport

- Temperature: -25–60 °C
- Relative humidity: 10–95 %
- Atmospheric pressure: 30–106 kPa

9.2 Storage

- Temperature: -25–55 °C
- Relative humidity: 10–95 %
- Atmospheric pressure: 70–106 kPa

9.3 Decontamination before shipment

If you are going to ship the device to the authorized Technical Service for repairs or to your authorized dealer for disposal, note:

WARNING! Risk to health from contaminated device.

1. Observe the information on the decontamination certificate. You can find it as a PDF document on our webpage (www.eppendorf.com/decontamination).
2. Decontaminate all the parts you would like to dispatch.
3. Include the fully completed decontamination certificate in the package.

9.4 Disposal

If the product needs to be disposed of, the relevant legal regulations must be observed.

Information on the disposal of electrical and electronic devices in the European Community:

Within the European Community, the disposal of electrical devices is regulated by national regulations based on EU Directive 2012/19/EU pertaining to waste electrical and electronic equipment (WEEE).

According to these regulations, any devices supplied after August 13, 2005, in the business-to-business sphere, to which this product is assigned, may no longer be disposed of in municipal or domestic waste. To document this, they have been marked with the following marking:

Because disposal regulations may differ from one country to another within the EU, please contact your supplier if necessary.

10 Technical data

10.1 Weight/dimensions

10.1.1 Equipment dimensions

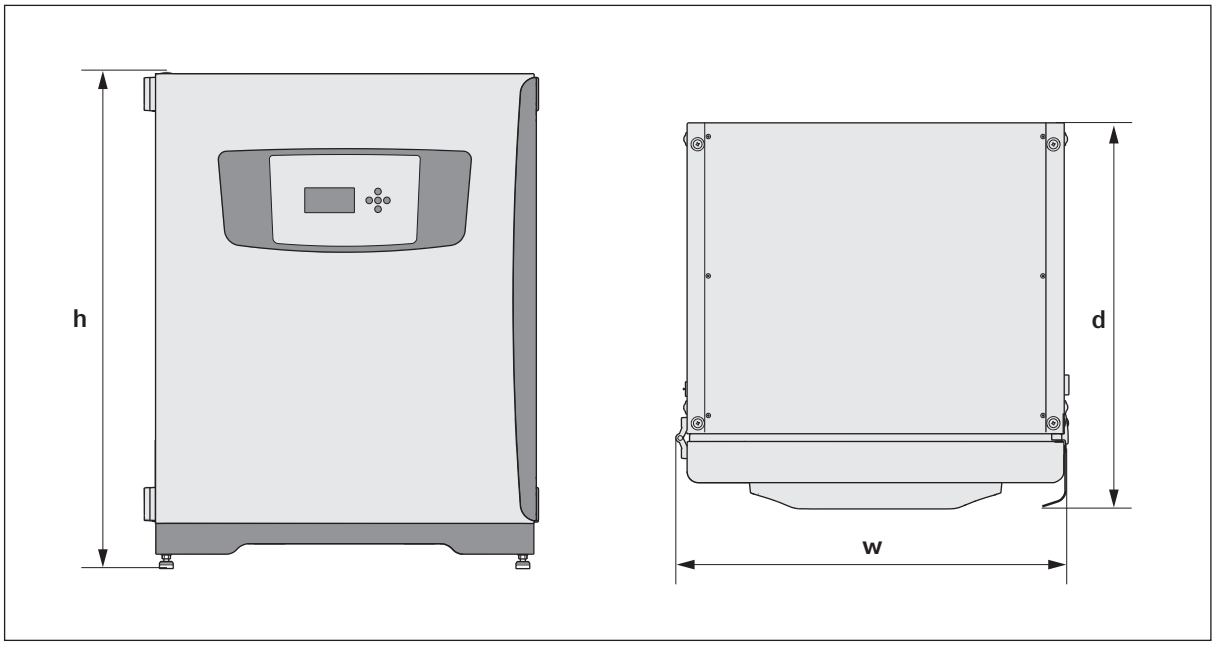

Fig. 10-1: Dimensions of CellXpert C170 (without safety latch)

Width (w)	71.8 cm (28.3 in)
Height (h)	90.0 cm (35.4 in)
Depth with outer door handle	70.0 cm (27,6 in)
Depth with control panel	70.5 cm (27.8 in)
Weight	81 kg (179 lb)

10.1.2 Internal dimensions

Width	53.9 cm (21.2 in)
Height	69.2 cm (27.2 in)
Depth	44.5 cm (17.5 in)
Volume (total)	167 L
Volume (useable, with 3 shelves)	127 L

10.1.3 Floor space required

Width	81 cm (31.9 in)
Depth	60 cm (23.6 in)
Height	95 cm (37.4 in)

10.1.4 Transporting dimensions

Width	120 cm (47.3 in), pallet included
Height	117.6 cm (46.3 in), pallet included
Depth	80 cm (31.5 in), pallet included
Weight	107 kg (236 lb)

10.1.5 Shelves

Polished stainless steel, perforated (standard)

Width	52.2 cm (20.6 in)
Depth	42.8 cm (16.9 in)
Number of shelves	3 standard; upgrade to 8 shelves
Flatness tolerance of shelf	1.5 mm
Thickness of shelf	1.5 mm
Max. load to the shelf (with 2 mm deflection)	7 kg
Max. load of the shelf rack	40 kg

10.1.6 Stacked CellXpert C170

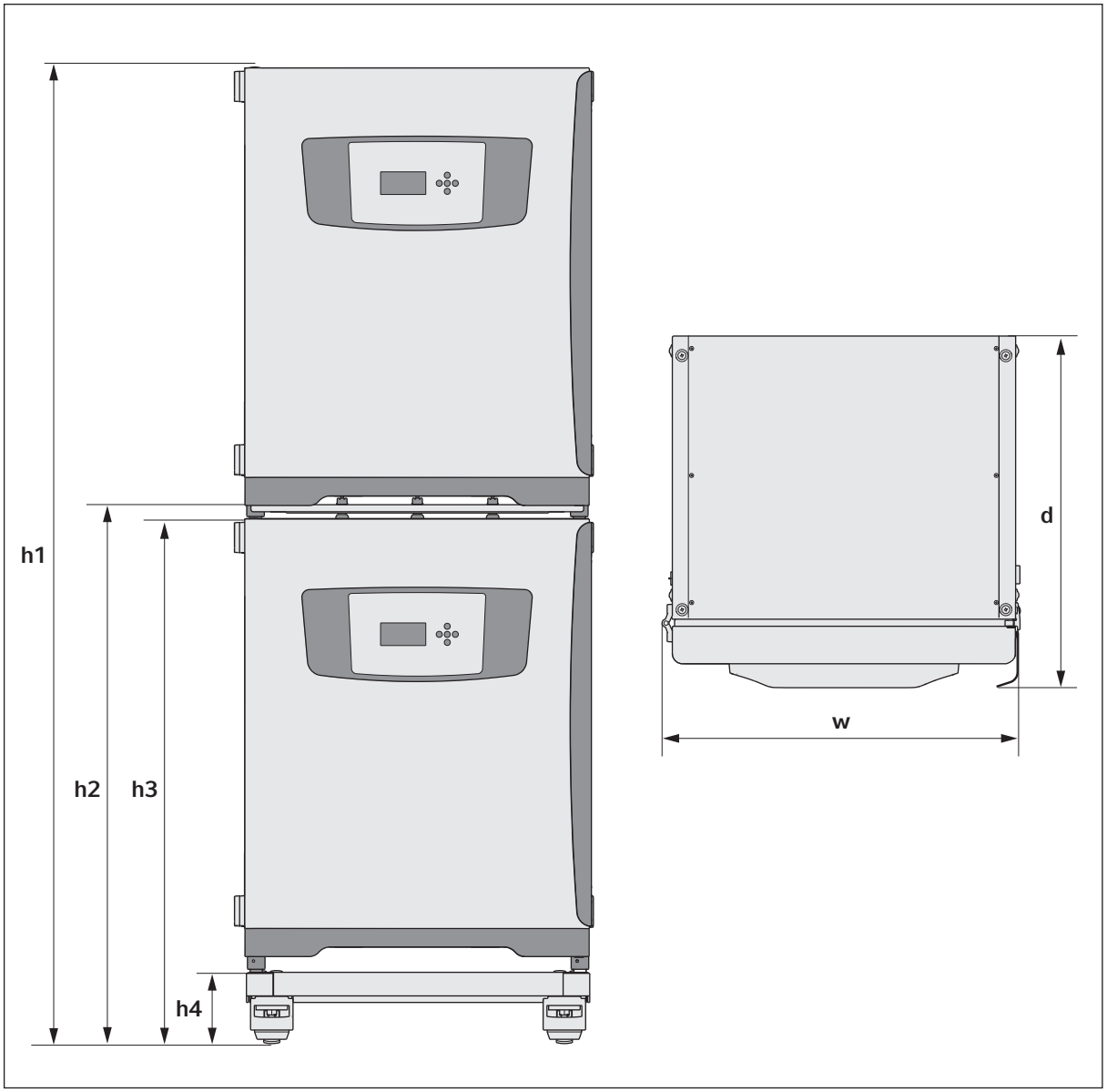

Fig. 10-2: Dimensions of 2 stacked CellXpert C170 (without safety latch)

Height				**Depth**	**Width**
h1	h2	h3	h4	d	w
194.6 cm	107.3 cm	104.5 cm	14.2 cm	70.5 cm	71.8 cm
(76.7 in)	(42.3 in)	(41.2 in)	(5.6 in)	(27.8 in)	(28.3 in)

10.2 Power supply

Mains/power connection	100–127 V ±10 %, 50–60 Hz 220–240 V ±10 %, 50–60 Hz
Power consumption for 100–127 V	1150 W
Power consumption for 220–240 V	1150 W
Overvoltage category	II (IEC 61010-1)
Protection class	I

Tab. 10-1: Connections

Ethernet	1 × user 1 × service

10.3 Interfaces

BMS relays	4
BMS max. current	2 A
BMS max. voltage	30 V DC/AC

10.4 Ambient conditions

Ambient temperature	18–28 °C
Relative humidity	20–80 %
Pollution degree	2
Atmospheric pressure	79.5–106 kPa (use up to a height of 2000 m above sea level)

10.4.1 Temperature management

Range	4 °C above ambient temperature to 50 °C
Control increment	0.1 °C
Accuracy	±0.4 °C (DIN 12880) at 37 °C and ambient 22 °C
Stability	±0.1 °C at 37 °C and ambient 22 °C
Uniformity	±0.3 °C at 37 °C and ambient 22 °C

10.4.2 High-temperature disinfection

Max. temperature	140 °C / 2 h
Approx. duration	12 h

10.4.3 CO_2 control

Range	0.1–20 %
Control increment	0.1 %
Accuracy	±0.3 % at 5 % CO_2 at specified relative humidity and at 37 °C and ambient 22 °C
Stability	±0.1 % at 5 % CO_2 at specified relative humidity and at 37 °C and ambient 22 °C
Uniformity	±0.1 % at specified relative humidity and at 37 °C and ambient 22 °C
Gas tubing	Inner diameter of 6.5 mm and outer diameter of 10 mm
Sensor type	NDIR sensor
Required gas pressure	0.1 MPa (1 bar, 14.4 psi), range 0.05–0.15 MPa (0.5–1.5 bar; 7.2–21.8 psi)

10.4.4 Humidity

Water tray capacity	2.5 Liters
Humidity control	95 % at 37 °C

The relative humidity attained could vary in the range of 92.5 ±2.5 % depending on the ambient humidity level and other factors.

10.4.5 Calibration

The maximum operating ambient temperature is 28 °C.
Factory calibration of the incubator is carried out at 37 °C, 5 % CO_2 and 90–95 % RH, in an ambient temperature of 20–25 °C with no heat-generating apparatus inside the chamber.

Software calibration adjustments are required to optimize performance if the incubator is being used outside the operating conditions. Performance specifications are also affected.

Contact Eppendorf Service for advice on calibration adjustments and relevant performance specifications. Be prepared with the model and serial number of your incubator and the complete details of your operating conditions.

Performance values represent the average of instruments checked in the factory under optimum conditions.

11 Ordering information

11.1 Shelves and shelf rack

Order no. (International)	Description
6710 859.009	**Shelves** for 170 L incubators, 2 pieces
P0628-6390	**Shelf rack** for 170 L incubators
P0628-6140	**Water tray** for 170 L incubators
6710 859.106	**Copper shelves** for 170 L incubators, 2 pieces
P0628-6260	**Copper water tray** for 170 L incubators

11.2 Gas system

Order no. (International)	Description
6731 070.107	**Gas tubing** 3 m, with in-line gas filter
6710 070.251	**In-line gas filter** 2 pieces

11.3 Electrics

Order no. (International)	Description
6731 070.069	**BMS connector**

11.4 Connectivity

Order no. (International)	Description
1006 000.009	**VisioNize box** with mains/power adapter
1006 072.000	**Mains/power adapter** VisioNize box
1006 073.006	**Cable** to connect devices with ethernet interface to VisioNize VisioNize box, Ethernet, length 5 m

11.5 Housing

Order no. (International)	Description
6731 070.034	**Plug for access port** 2 pieces
6731 070.093	**Stacking stand, lower frame** with castors
6731 070.085	**Stacking stand, upper frame**
6710 070.235	**Safety fastening kit**

11.6 Accessories

Order no. (International)	Description
P0628-5000	**Automatic gas cylinder change-over unit**
P0628-6150	**New Brunswick™ Galaxy® Gas Analyzer** CO_2
P0628-6831	**New Brunswick™ Galaxy® Gas Analyzer** CO_2, O_2
P0628-7890	**New Brunswick™ Galaxy® Gas Analyzer** CO_2, O_2, RH
P0628-7880	**Temperature probe 100 mm tip**
P0628-7881	**Temperature probe 5 mm tip**

11.7 Upgrade options

The following upgrade options are available:

- Connection for remote monitoring (4–20 mA interface)
- Inner door with 4 door segments
- Inner door with 8 door segments
- Reversal of door opening

Contact your local Eppendorf partner for ordering upgrade options.

Index

D

Daily checks 47

Disinfecting agent 49

Disinfection/Decontamination 48

Disposal 62

E

External sensor 38

F

Filling quantity 37

L

Location 24

M

Monthly checks 47

S

Safety latch 26

U

User requirement 9

Utilities requirements 23

W

Water tray 37

Weekly checks 47

Evaluate Your Manual

Give us your feedback.
www.eppendorf.com/manualfeedback

Your local distributor: www.eppendorf.com/contact
Eppendorf AG · Barkhausenweg 1 · 22339 Hamburg · Germany
eppendorf@eppendorf.com · www.eppendorf.com