CAPP®

DENMARK

CRR-08X

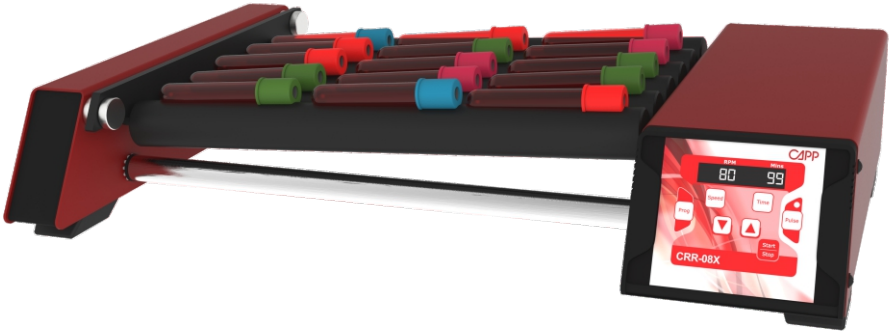

USER MANUAL

CONTENTS

1. Product Description..... 1

1.1 Introduction

1.2 Intended Use

1.3 Standard Accessories

1.4 Features

1.5 Technical Specifications

2. Safety Precautions..... 4

3. Installation..... 6

3.1 Location & Mounting

3.2 Connecting Power Adaptor

4. Standard Part Listing..... 7

5. User Interface and Display..... 8

6. Removing & Installing Rollers 9

7. Operation..... 10

7.1 Power ON the device

7.2 Setting Speed

7.3 Setting Time

7.4 Start / Stop Operation

7.5 Default Pulse Mode

7.6 Programmable Pulse Mode

7.7 Program Mode

8. Warranty Statement.....16

9. Product Disposal..... 18

1. PRODUCT DESCRIPTION

1.1 INTRODUCTION

This is a smart 6/10 digital Tube roller with programming feature. This Roller is equipped with a long life BLDC motor and a small footprint. The rolling motion also provides gentle rocking and offers pulse function for thorough mixing. Set up to 9 user defined programs with the digital display for accurate and easy setting. The removable rollers can be set to suit tubes and bottles of different diameters. The rollers can be easily removed and replaced for cleaning.

1.2 INTENDED USE

This tube roller is used in laboratories for mixing blood samples, viscous samples and for liquid-solid suspensions.

1.3 STANDARD ACCESSORIES

1. Power supply (adaptor)
2. Product user manual & warranty card

NOTE: *Before using the instrument, please read this user manual carefully. This user manual is intended to assist with the operation and care of the unit only and not its repair. For repair please contact the supplier.*

For you reference, make a note of serial number, date of purchase and supplier here.	
Serial No.:	*Purchase Date:*
Supplier:	

1. PRODUCT DESCRIPTION

1.4 FEATURES

1. Gentle rocking and rolling system for optimum mixing
2. Adjustable speed ranging from 10 to 80 RPM
3. Timer ranging from 1 min to 99 mins and infinite mode
4. Maintenance free brushless DC motor for quiet operation and long life
5. Removable rollers for proper cleaning & better contamination protection
6. Adjustable roller spacing to hold different diameters tubes
7. Clockwise rolling mechanism - pulse mode
8. Digital display for easy setting of values
9. Programmable pulse mode
10. Small footprint with 6/10 roller design
11. Suitable for mixing blood sample and viscous substances
12. Closed loop operation for exact speed control under varied load conditions
13. Low voltage instrument of 24VDC
14. Works with 80% humidity and 40 °C.

1. PRODUCT DESCRIPTION

1.5 TECHNICAL SPECIFICATIONS

Product	6 Tube Roller	10 Tube Roller
Motor Type	Brushless DC Motor	Brushless DC Motor
Rocking Motion	Rolling & Rocking	Rolling & Rocking
Number of tube roller	6 Rollers	10 Rollers
Speed Range	10 to 80 RPM	10 to 80 RPM
Speed Accuracy	± 5 RPM	± 5 RPM
Speed Steps	1 RPM	1 RPM
Tilt Angle	+/- 3°	+/- 3°
Operation Type	Continuous & Timed Operation	Continuous & Timed Operation
Max. Loading Capacity	2 Kg	2 Kg
Timer Range	0 to 99 mins & Continuous Mode	0 to 99 mins & Continuous Mode
Removable Rollers	Yes	Yes
Protection Class	IP 21	IP 21
Weight	6 Kg	7.5 Kg
Permissible Ambient Temp.	5°C to 40°C	5°C to 40°C
Permissible Relative Moisture	<80%	<80%
Air Pressure	80 to 106 kPa	80 to 106 kPa
Dimensions (W x D x H)	501 x 301 x 93 mm	500 x 448 x 93 mm
Input Voltage	100 - 240 VAC, 50 / 60 Hz	100 - 240 VAC, 50 / 60 Hz
Output Voltage	24VDC	24VDC
Power Consumption	6W	7.2W

2. SAFETY PRECATIONS

- Never use the instrument in any manner not specified in this manual.
- Equipment used in any manner not specified in this manual or by the manufacturer might result in the lapse of warranty.
- Do not try to stop the roller by blocking / holding it. Do not attempt to remove rollers during operation.
- Never move the instrument while the equipment is under operation.
- Repairs must only be performed by authorized service technician.
- Only use recommended original spare parts for best result & product safety.
- If liquids are spilled on the roller, the instrument must be cleaned carefully and properly before being used again.
- Prior to mixing, the tubes should be visually inspected for material damage. Damaged tubes must not be used as this can result in sample loss and the contamination of the product..
- The maximum capacity of 2 kg most not be exceeded.
- This product must be used for the specified applications only. It must not be operated in a hazardous or flammable environment and must not be used to mix explosive or highly reactive substances.

- Do not place the potential hazardous material within the clearance area/ envelope.
- Keep this user manual in a place where it is easily accessed by the user.
- Wear your personal protective equipment in accordance with the hazards category of the medium to be processed. There is risk of liquid splashing.
- Place the instrument on a flat, leveled and solid surface. Make sure the feet of the instrument are clean and undamaged.

2. SAFETY PRECATIONS

- Load the tubes safely between the rollers. Always distribute the samples evenly on the device.
- Do not move the instrument while it is operating or connected to the main power supply.
- Ensure that the hinges are properly locked before performing any operation.
- Do not apply any pressure to the hinges and it should be used only for locking and unlocking rollers.
- Remove the roller/s one after another. .
- Ensure that only closed tubes are used for mixing and rolling.
- Do not lean on the equipment. It may damage the equipment or harm the operator.
- Do not fill tubes near the device. Liquid spillage may harm the device.
- In the event of contamination caused by aggressive agents, the device must be cleaned immediately using a natural cleaning liquid. If any damage is seen, contact the service technician.
- The power adaptor given with unit is designed to be used for this particular unit. Do not use any other power adaptor.
- Only process media which will not react dangerously to the extra energy produce by mixing.
- Do not operate the appliance in explosive atmosphere with hazardous substance or under water.

3. INSTALLATION

Gently remove the upper packaging and take out the tube roller by holding it from the bottom. When this equipment is used for the first time, ensure that all the packaging accessories are removed from the product. Please keep all the packaging in safe storage for at least 2 years for warranty purposes.

3.1 LOCATION & MOUNTING

Place the device on a flat and leveled surface and ensure that all four feet stands on the surface firmly. Avoid installing on a slippery surface or surface prone to vibration.

1. Ideal ambient temperature is 20°C ± 5°C; avoid placing the device in direct sunlight.
2. Keep clearance of at least at least 30 cm from all sides to guarantee cooling efficiency.
3. Keep this away from heat or water to avoid sample temperature issues.
4. Do not place the device so such that it becomes difficult to operate the device.

3.2 CONNECTING THE POWER ADAPTOR

1. Connect one side of power adaptor to the rear side of device and other to the power supply as shown in the figure below.
2. Ensure the power switch is OFF while connecting the power adaptor.

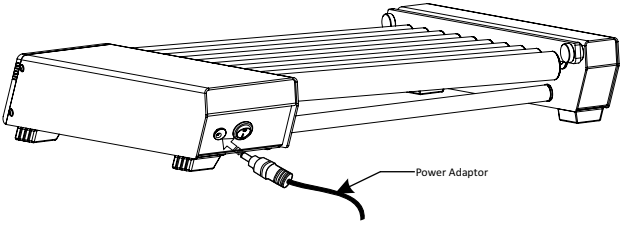

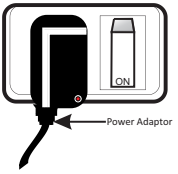

4. STANDARD PART LISTING

Front Side

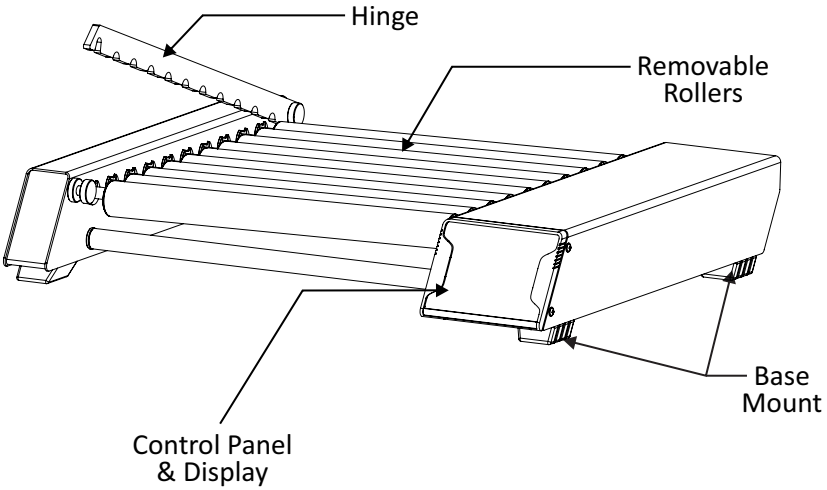

Back Side

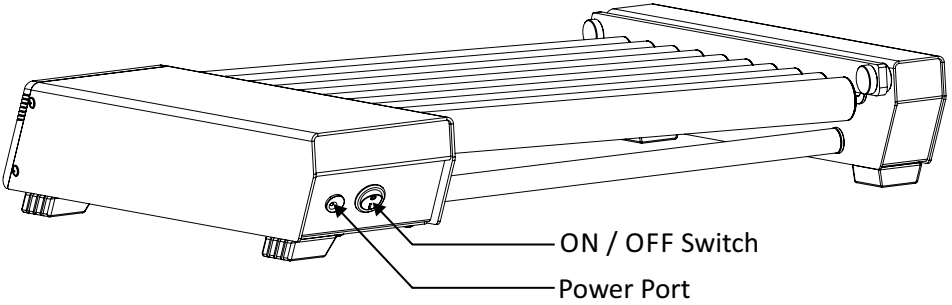

5. USER INTERFACE & DISPLAY

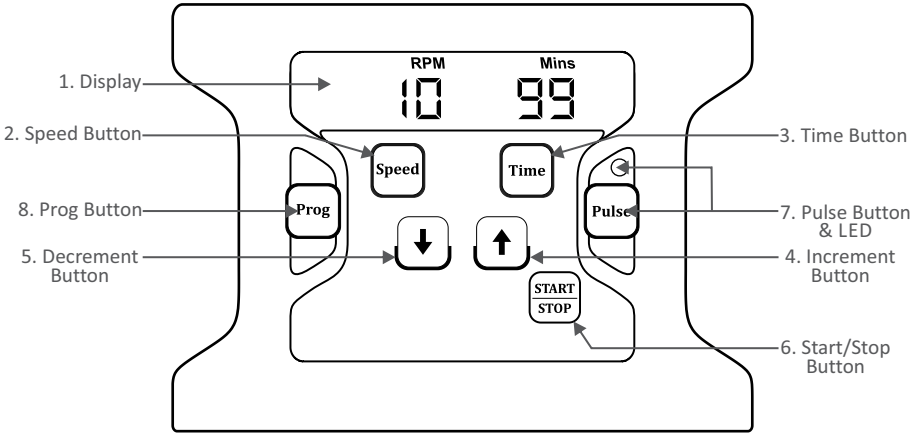

No.	Description
1. Display	The display show the set speed as well as the time value. It also display Selected Program when in Prog Mode
2. Speed	Press 'Speed' to select speed value and use increment or decrement button to set require speed
3. Time	Press 'Time ' to select time value and use increment or decrement button to set require run time
4 / 5. Increment / Decrement	Press ' Increment / Decrement ' to set require value of speed, time or program (Prog Mode)
6. Start/Stop	Press " Start/Stop " to start the operation or to stop the ongoing operation.
7. Pulse & LED	Press 'Pulse' once to start pulse operation and press it again to stop operation. Pulse LED will glow to indicate Pulse is activated. It can also be used for programmable pulse mode.
8. Prog	Hold down 'Prog" to enter in program mode and use other require buttons to set parameter for selected program.

6. REMOVING & INSTALLING ROLLERS

6.1 REMOVING ROLLERS

Device rollers can be removed / changed by a simple push up and pull process. First open the Hinge as shown in the below image and then remove the rollers. 1)Open hinge, 2) push the roller gently on hinge side, 3) pull the roller up, 4) Pull the rollrt out of the side opposite to the hinge..

Below image shows the process to remove rollers.

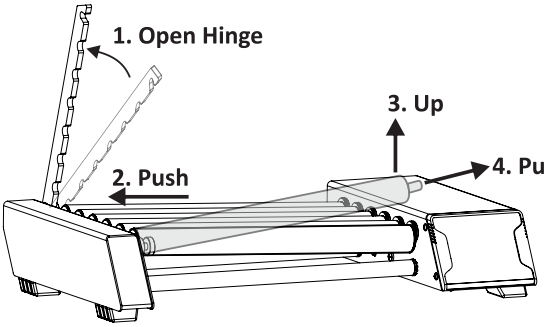

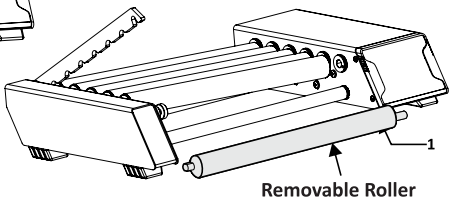

Always remove the rollers in order.

Remove the 1st roller then 2nd and so on..

User won't be able to remove the roller from between.

6.2 INSTALLING ROLLERS

Follow the exact reverse process to insert the roller back to tube roller. Below image shows the step by step procedure to insert the roller back in the unit.

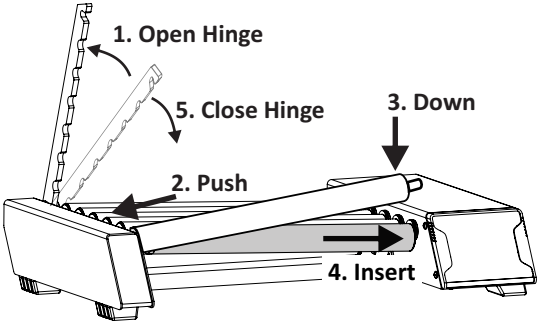

7. OPERATION

7.1 POWER ON THE DEVICE

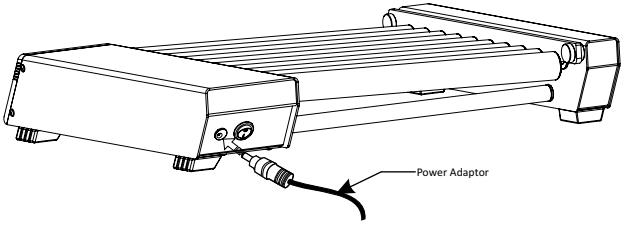

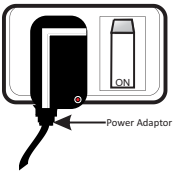

After connecting the power adaptor to back side of device, switch the main power supply to “ON” & then switch ON the device from rear side end. Make sure that tubes are loaded properly before use. Do not start the device if the hinge is open.

7.2 SETTING SPEED

Press ‘Speed’ to select speed value and then press ‘Increment / Decrement ’ to set required speed. The speed for operation ranges from 10 RPM to 80 RPM with incremental/decremental step of 1 RPM. Speed values are saved after blinking 5 times.

7.3 SETTING TIME

Press “Time” to select time value and use increment or decrement button to set run time. Run time for operation can be set between 1 minute to 99 minutes with incremental/decremental step of 1 minute. It can also be set for continuous or infinite mode indicated by ‘ ∞ ’ in time display. The value will be saved after 5 blinks. The timer is a countdown timer and will get activated as soon as the operation starts. Time cannot be modified when the unit is in operation.

7.4 START / STOP OPERATION

Once the required speed and time are set, press “Start / Stop” to START operation. Speed gradually increases from lower RPM to set RPM and time takes effect as soon as the operation starts.

Press “Start / Stop” again to STOP the ongoing operation at any time. Speed gradually decrease from set RPM to zero (0) and stops in a few seconds.

Note: *Speed and time cannot be changed/ modified in-between operation.*

7.5 DEFAULT PULSE MODE

Pulse mode is used for vigorous mixing of samples by rolling with a momentary pause every 30 seconds. Default cycle time set for pulse mode is 30 seconds.

Set required speed and total run time before activating pulse mode to guide the device to start pulse mode operation for that particular speed and total run time.

Once the speed and total run time are set, press “Pulse Button” to START pulse mode operation for that particular speed and total run time.

In pulse mode, pulse LED will glow indicating pulse mode operation is activated.

Example: Speed set to 50 RPM and total run time set to 2 minutes. Then pulse mode operation will have a speed of 50 RPM and total run time of 2 minutes. It means there will be rolling for 30 seconds (cycle time) with momentary pause in-between and then again rolling for 30 seconds (cycle time) for total of 2 minutes (total run time).

Press “Pulse” again to stop ongoing pulse mode operation. User can also Press “Start / Stop ” to STOP ongoing pulse mode operation.

7.6 PROGRAMMABLE PULSE MODE

User can also program the pulse mode and set it for alternating times from 30 secs to 90 secs.

First set the required speed and total run time for operation. Then hold down the “Pulse” button to select the cycle time of rolling. the cycle time value will appear on the right side display, “SEC” will appear in left side display and pulse LED will start blinking indicating that the user can now modify the cycle time. Use increment or decrement button to modify the cycle time between 30 seconds to

90 seconds. Once cycle time is modified, it will automatically save after 5 blinks. Press the “Pulse Button once” to START pulse mode operation with modified cycle time.

Press “Pulse” again to stop pulse mode operation. User can also Press “Start / Stop” to STOP ongoing pulse mode operation.

7.7 PROGRAM MODE

The program mode operation feature allows the user to save 9 programs which can have different speed and time parameters. User can use any of these programmed parameters by simply turning ON the program mode.

To turn ON the program mode, hold down “Prog” untill “Prog on” displays indicating program mode is activated.

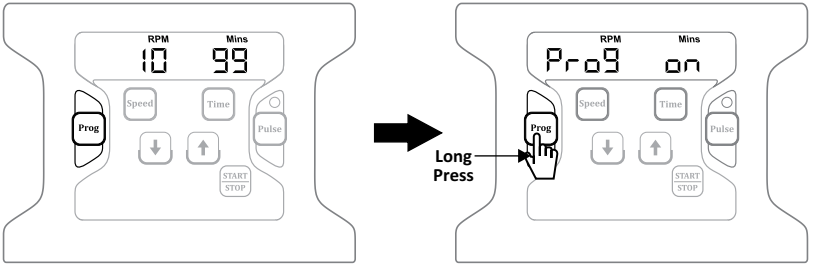

Default Mode

After a few seconds, the display will show “P1” and “speed & time value” alternatively. This shows that the current program is P1 with some RPM and time value.

7. OPERATION

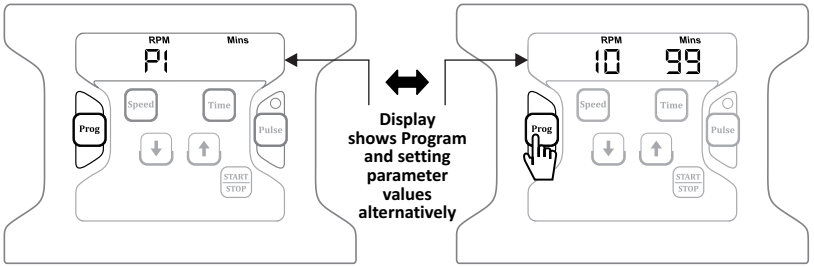

Press the “Program” button to select any program from “P1 to P9”. Programs can also be select by pressing “Increment or decrement” button. Once require program is selected, press the “speed button” to select and set speed value. Press “Time” to select and set time value.

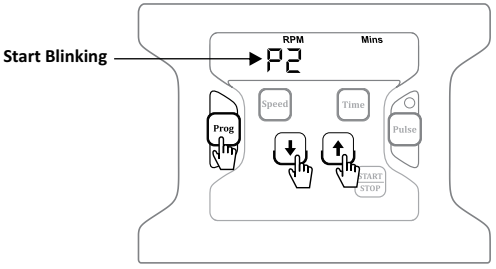

Selecting Program

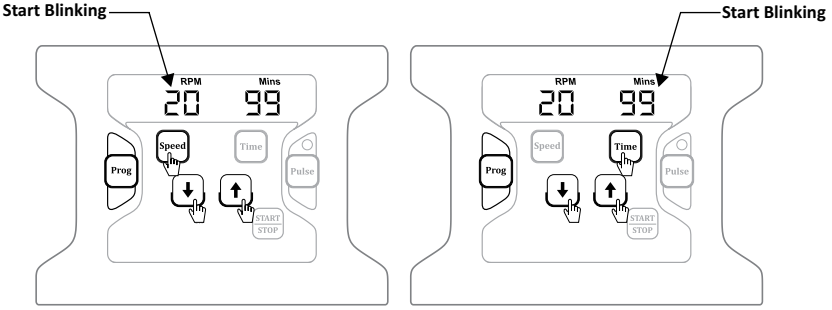

Setting Speed Value

Setting Timer

7. OPERATION

Speed and time value for that particular program is now saved. Press the “Start Button” to start the program mode operation. Once set RPM is reached, the program “Px” (with x = 1 to 9) and its “Speed” & “Time” value will display alternatively.

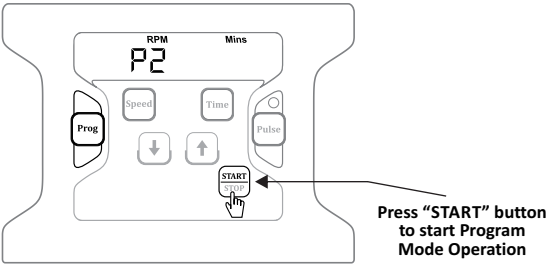

To stop operation, press “Stop”.

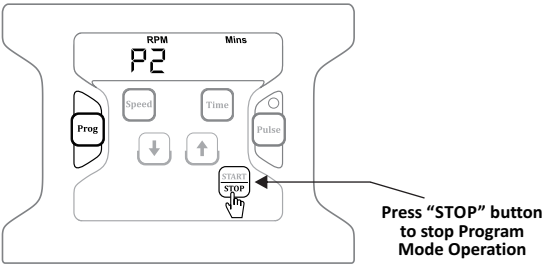

To leave Program mode, hol d down the “Program” button again to turn OFF the Program mode. It will display “Prog off” indicating program mode is off.

7. OPERATION

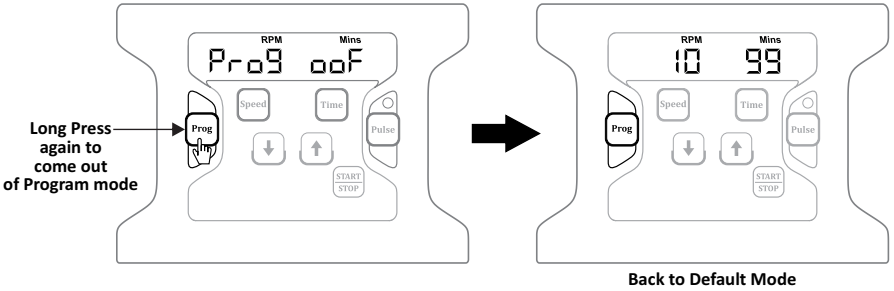

Note: *On every restart, the device automatically comes out of program mode. It shows the last run default speed and time value.*

POWER MODE

The fucntion of this particular feature is that in case of power failure, equipment saves the SPEED, TIME and other details as set by the user. When the power returns, equipment runs for the remaining time left with cycle time of +/- 5 mins. Equipment saves the run time every 5 minutes of operation.

To select this feature, long press “TIME” button. Unless and until this feature is not switched on, Tube Roller will not resume its operation after power failure.

Example: User has set RPM of 45, time of 35 mins. After completion of 23 mins, there was power cut and operation comes to a stand still. Just before the power cut, remaining time seen on the display was 23 mins. When the power returns, the tube roller will assume its operation from 25 mins with the set RPM and other operational values.

8. WARRANTY STATEMENT

This product is warranted to be free from defects in material and workmanship for a period of two (2) years from date of purchase. Your product will be duly repaired upon prompt notification in compliance with the following conditions :

• This warranty is valid only if the product is used for its intended purpose and within the guidelines specified in this instruction manual. This warranty does not cover damage caused by accident, neglect, misuse, improper service, natural forces or other causes not arising from defects in original material or workmanship. This warranty does not cover any incidental or consequential damages, commercial loss or any other damages from the use of this product.

• The warranty is invalidated by any non-factory modification, which will immediately terminate all liabilities on us for the products or damages caused by its use. The customer shall be responsible for the product or use of products as well as any supervision required for safety. If requested the products must be returned to the distributor in well packed and insured manner and all shipping charges must be paid.

Note: Some states do not allow limitation on the length of implied warranties or the exclusion or limitation of incidental or consequential damages. This warranty gives you specific legal rights. This warranty is given expressly in lieu of all other warranties, expressed or implied.

• The purchaser agrees that there is no warranty of merchantability or of fitness for any intended purpose and there are no other remedies or warranties, implied, which extend beyond the description on the face of the agreement. This warranty is only applicable to the original purchaser.

8. WARRANTY STATEMENT

- Products received without proper authorization will not be processed for warranty or service. All items returned for service should be sent with postage prepaid in the original packaging or other suitable packaging, padded to avoid damage. We will not be responsible for damage incurred by improper packaging.

Note: This warranty is valid only if the warranty is registered with the supplier within 30 days from the date of purchase.

9. PRODUCT DISPOSAL

In case the product is to be disposed of, the relevant legal regulations are to be observed.

Information on the disposal of electrical and electronic devices in the European Community

The disposal of electrical devices is regulated within the European Community by national regulations based on EU Directive 2012/19/EU on waste electrical and electronic equipment (WEEE). According to these regulations, any devices supplied after 13.06.05 in the business to business sphere, to which this product is assigned, may no longer be disposed off in municipal or domestic waste. They are marked with the following symbol to indicate this.

As disposal regulations within the EU may vary from country to country, please contact your supplier if necessary.

CAPP®

DENMARK

Landbrugsvej 10 | DK 5260 | Odense S | Denmark

Tlf +45 6613 6140 | Fax +45 6613 2770

www.capp.dk | info@capp.dk