VirTis SP SCIENTIFIC
Making Time for Science

FREEZE DRYER OPERATOR'S MANUAL

VIRTIS BENCHTOP PRO FREEZE DRYERS

FTS Systems • Genevac • Hotpack • Hull • PennTech • VirTis

Copyright © 2017 SP Scientific. All marks herein are used under license.
All brand or product names mentioned may be trademarks or registered trademarks of their respective companies.

Part Number: 100007682
Rev 004, 05/17

SP Scientific	3538 Main Street Stone Ridge, NY 12484 USA	935 Mearns Road Warminster, PA 18974 USA	815 State Route 208 Gardiner, NY 12525 USA
	(800) 251-1531 (845) 687-0071	(800) 523-2327 (215) 672-7800	(800) 431-8232 (845) 255-5000

SP Service (UK) **44 (0)1473 243000**
SP Service (US) **(877) 548-4666**
SP Service Email **service@spscientific.com**

Website **http://www.spscientific.com/**

This Freeze Dryer Operator's Manual contains confidential and proprietary information of SP Scientific and may be used only by a recipient designated by and for purposes specified by SP Scientific.

Reproduction of, dissemination of, modifications to, or the creation of derivative works from this Freeze Dryer Operator's Manual, by any means and in any form or manner, is expressly prohibited, except with the prior written permission of SP Scientific. Permitted copies of this document must retain all proprietary notices contained in the original.

The information in this document is subject to change without prior notice. Always confirm with SP Scientific that you are using the most current version of this document. SP Scientific is free to modify any of its products and services, in any manner and at any time, notwithstanding the information contained in this document.

THE CONTENTS OF THIS DOCUMENT SHALL NOT CONSTITUTE ANY WARRANTY OF ANY KIND, EITHER EXPRESSED OR IMPLIED, INCLUDING BUT NOT LIMITED TO THE IMPLIED WARRANTIES OF MERCHANTABILITY AND/OR FITNESS FOR A PARTICULAR PURPOSE OR GIVE RISE TO ANY LIABILITY OF SP SCIENTIFIC, ITS AFFILIATES OR ITS SUPPLIERS.

The terms and conditions governing the use of this Freeze Dryer Operator's Manual shall consist of those set forth in written agreements with SP Scientific.

Important Symbols

WARNING!
INJURY OR EVEN DEATH MAY RESULT IF A RECOMMENDATION MARKED WITH THIS SYMBOL IS NOT HEEDED.

CRUSH HAZARD. KEEP HANDS CLEAR WHEN OPERATING DOOR.

ELECTRIC SHOCK DANGER! USE APPROPRIATE CAUTION TO AVOID INJURY OR DEATH.

CORROSIVE CHEMICAL. WEAR SUITABLE GLOVES, SAFETY GLASSES, AND PROTECTIVE CLOTHING.

BURN DANGER! POTENTIALLY HOT SURFACE. USE APPROPRIATE CAUTION.

PROPERTY CAUTION! TO PREVENT DAMAGE TO CHAMBER EQUIPMENT AND/OR LOAD, ADHERE TO PROCEDURES MARKED BY THIS SYMBOL.

DO NOT STORE FLAMMABLE MATERIALS IN CHAMBER.

PRACTICAL OPERATING TIP. THESE RECOMMENDATIONS STREAMLINE UNIT OPERATION AND PREVENT COMMON OPERATOR ERRORS.

ALWAYS WEAR CERTIFIED PERSONAL PROTECTIVE EQUIPMENT (PPE) SUITED FOR THE TASK YOU ARE PERFORMING.

EXPLOSIVE MATERIALS HAZARD! KEEP OBJECTS AWAY FROM HEAT.

Freeze Dryer Safety Warnings

- ✓ *Do not freeze-dry explosive or highly flammable substances.*
- ✓ *Always assume that shelf, condenser and internal parts may be very cold or very hot. Wear protective equipment to avoid burns.*
- ✓ *Always ensure that only an authorized technician services the refrigeration, heat transfer, vacuum and electrical systems.*
- ✓ *Always ensure that refrigeration air intake is clear and clean.*
- ✓ *Always ensure vacuum pump exhaust is properly ventilated and/or contained.*
- ✓ *Always practice team lifting when moving heavy equipment.*
- ✓ *Always use a maximum one pound regulator if backfilling from an inert gas source.*
- ✓ *Always wear safety glasses when using glass flasks.*
- ✓ *Do carefully read the entire instruction manual before attempting to operate the freeze dryer.*
- ✓ *Do verify that the electric service and other utilities match the unit's requirements before connecting to power.*
- ✓ *Never allow hand or body contact with open vacuum ports.*
- ✓ *Never clean with solvents. Use mild detergent and water only.*
- ✓ *Never operate the unit without all covers in place.*
- ✓ *Never pressurize chambers. Laboratory freeze-drying systems are designed for vacuum only.*
- ✓ *Never use acrylic closures if they are cracked or crazed.*
- ✓ *Never use with toxic, corrosive, flammable or organic materials unless special precautions are in place to prevent injury to personnel or damage to equipment.*

© SP Scientific 2017

Warranty Information (VirTis Lyophilizers)

VirTis BenchTop Pro Lyophilizers are warranted by SP Scientific to be free of defects in material and workmanship when operated under normal conditions as specified in the instructions provided in this manual. Please take this opportunity to locate the serial tag on your new VirTis BenchTop Pro and record the information below for future reference. SP Scientific also recommends that you complete and return your unit's warranty registration card.

Model Number _____

Serial Number _____

Part Number _____

Limited Warranty

SP Scientific (the "Company") shall warrant each of its products against defects in material or workmanship for a period of 12 months from the date of installation or 15 months from the date of shipment (whichever comes first) provided that the product is used in a reasonable manner under appropriate conditions and consistent with the applicable operating instructions. In addition, the Company shall warrant the refrigeration system for a period of 24 months provided the system is used in a reasonable manner under appropriate conditions and consistent with the applicable operating instructions.

The obligation of the Company shall be, at its option, to repair or replace, without charge any parts that prove to be defective within the warranty period, if the purchaser notifies the Company promptly in writing of such defect. No product shall be returned to the Company without prior approval of the Company.

This limited warranty shall cover the costs of parts and labor to repair or replace all defective product(s) at the Seller's factory. For all products installed by the Company and located within the Company service travel areas, this warranty shall cover transportation charges to ship the product to and from the Company's factory and/or the costs of travel, room and board if the Company's employees conduct repair at the Buyer's location. In lieu of repair or replacement at the Company's factory, the Company may, in its discretion, authorize a third party to perform the repair or replacement at the Buyer's location, and at the Company's sole expense.

The Company shall not be responsible for labor charges payable with respect to persons other than Company employees. Replacement or repair of parts pursuant to this warranty shall not in any way extend the original warranty period. The Company shall not be responsible for any unauthorized repairs, replacements or product modifications, nor will it be responsible for any product failures resulting from such unauthorized repairs, replacements or product modifications negligently or otherwise made by persons other than Company employees or authorized representatives of the Company. The buyer shall assume transportation charges to ship the product to and from the Company's factory and the costs of travel, room and board if the Company's employees conduct repair at the Buyer's location within the warranty period if the product was not installed by the Company's and/or is not located within the Company's service travel areas.

THE COMPANY DOES NOT MAKE AND EXPRESSLY DISCLAIMS ANY WARRANTY OF MERCHANTABILITY OR FITNESS FOR A PARTICULAR PURPOSE OR ANY OTHER WARRANTY, EXPRESSED OR IMPLIED, WITH RESPECT TO THE SALE, INSTALLATION, DESIGN OR USE OF ITS PRODUCTS. ADDITIONALLY, THE COMPANY SHALL NOT BE LIABLE FOR ANY CONSEQUENTIAL DAMAGES RESULTING FROM THE USE OF OR ANY DEFECTS IN ITS PRODUCTS.

The Company's employees are available to provide general advice to customers concerning the use of the Company's products; however, oral representations are not warranties with respect to particular products or their uses and may not be relied upon if they are inconsistent with the relevant product specifications for the items set forth herein.

Notwithstanding the above, the terms and conditions set forth in the Company's formal sales contracts shall be controlling and supersede any inconsistent terms contained herein, and any changes to such contracts must be made in writing and signed by an authorized executive of the Company.

WARNING! THE DISPOSAL AND/OR EMISSION OF SUBSTANCES USED IN CONNECTION WITH THIS EQUIPMENT MAY BE GOVERNED BY VARIOUS FEDERAL, STATE OR LOCAL REGULATIONS. ALL USERS OF THIS EQUIPMENT ARE URGED TO BECOME FAMILIAR WITH ANY REGULATIONS THAT APPLY IN THE USERS AREA CONCERNING THE DUMPING OF WASTE MATERIALS IN OR UPON WATER, LAND OR AIR AND TO COMPLY WITH SUCH REGULATIONS.

© SP Scientific 2017

© SP Scientific 2017

Contents

Important Symbols ii
Freeze Dryer Safety Warnings ii
Warranty Information (VirTis Lyophilizers) iii

Introduction 1

Features 1
BenchTop Pro Usage 1
Cold Trap Condenser Module 1
Available Configurations 2

Installation and Startup 3

Initial Inspection 3
Lifting Instructions 3
Service Connections 4
Vacuum Pump Installation 4
Installing the Vacuum Pump 5
Oil Mist Eliminators 6
BenchTop Pro Setup 7
Vacuum Baffle Plate 8

Basic Operation 9

Getting Started 9
Product Preparation: Flask/Manifold Drying 9
Product Preparation: Drum Manifold Shelf Drying 9
Product Preparation: Chamber Drying 10
Quickseal Valves 10
Basic Operation Instructions 11
Meltback 13
Preventing Glassware Breakage 13
Product Dryness End Point 13

Cold Trap Condenser 15

Overview 15
Product Requirements 15
Cold Trap Setup 16

Accessories and Options 17

Manifolds 17
Shelf Racks 17
Liquid Nitrogen Trap 19
Filter Trap 20
Degassing Filter Trap Cartridges 20
Stoppering-Tainer 21
Stoppering-Tainer Operation 21

General Maintenance 23

Vacuum System 23
Vacuum Pump 23

© SP Scientific 2017

Changing Vacuum Pump Oil 23
Clearing the Vacuum Pump Maintenance Alarm 24
Scheduling Oil Changes 24
Vacuum Tubing and Gaskets 24
Condenser Gasket 25
Vacuum Pump Gas Ballast Valve 25
Quickseal Valves 25
Refrigeration System 26
The Air-Cooled Condenser 26
Condenser Chamber 26
Appendix A: Troubleshooting 27
Vacuum Problems 27
Product Melting 28
Appendix B: Serum Vial Capacities 29
Appendix C: Stainless Steel Cleaners 31
Appendix D: Chemical Resistance Charts 33
Acrylic Parts 33
BenchTop Pro Bezel (ABS) 33
BenchTop Pro Front Panel (Kydex) 38
BenchTop Pro: Miscellaneous Parts 40
BenchTop Pro Top 53
Protective Cover for Omnitronics™ Controller 57
Appendix E: Refrigerant Information 58

© SP Scientific 2017

Chapter 1

Introduction

VirTis BenchTop Pro freeze dryers offer a solution for laboratories with space constraints. Featuring condenser temperatures of -55 °C to -105 °C, BenchTop Pro freeze dryers can handle a wide range of processing requirements.

Features

- Compact design.
- Direct chamber, flask and/or shelf drying capabilities.
- Versatile Omnitronics™ controller with digital display of temperatures and system status.
- Three- to nine-liter condenser capacity.
- Quickseal valves for processing flasks.[1]
- Manual Stoppering-Tainer (optional).

BenchTop Pro Usage

BenchTop Pro freeze dryers are mechanically refrigerated condenser modules that can be utilized as freeze dryers, as well as cold traps and for initial product freezing. When used in freeze-drying mode, the BenchTop Pro can effectively remove up to 99% of product moisture.

Cold Trap Condenser Module

When using a vacuum concentrator or gel dryer with your BenchTop Pro unit, the condenser module can be used as a cold trap, trapping vapors driven off the product before they reach the vacuum pump. To configure a BenchTop Pro unit for a cold trap application, replace the condenser cover plate or adapter plate with a cold trap adapter plate and a ¾-inch stainless steel port. For more information, refer to *Chapter 4: Cold Trap Condenser.*

Note: *A low condenser temperature is required when trying to trap organic solvents.*

[1] Requires optional manifold.

© SP Scientific 2017

Available Configurations

Freeze-drying in the condenser (3L & 8L Only)

Stainless Steel Vertical Manifold

Vertical Acrylic Drum Manifold with Shelf Rack

Stainless Steel Drum Manifold

Stainless Steel Tree-Type Manifold

Vertical Acrylic Drum Manifold

© SP Scientific 2017

Installation and Startup

Initial Inspection

Inspect the contents of your shipment immediately upon arrival. Check packing material for possible small accessory items. DO NOT ACCEPT damaged shipments from a carrier without a signed notification of damages.

If concealed damage and/or loss is discovered, contact the freight carrier immediately. Keep the contents, packing material and related paperwork intact until the written report is obtained.

Note: *SP Scientific will cooperate in the matter of collecting your claim, but shall not assume responsibility for the collection or free replacement of the material. When possible, replacement parts shall be shipped and invoiced to you, making them a part of your claim.*

Lifting Instructions

If no damage was discovered following the initial inspection of the BenchTop Pro unit, make sure that two (2) individuals are available to safely lift the unit. The BenchTop Pro should be lifted by the metal frame near the unit's four (4) feet, not by the front panel.

WARNING! THE BENCHTOP PRO WEIGHS UP TO APPROXIMATELY 131 LBS (59.4 KG). ALWAYS PRACTICE TEAM LIFTING WHEN MOVING HEAVY EQUIPMENT.

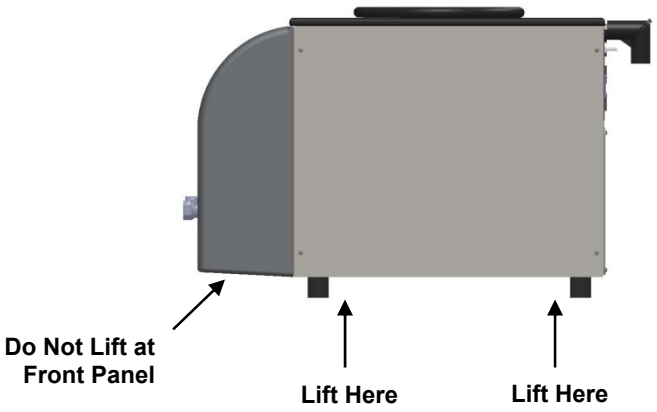

© SP Scientific 2017

Service Connections

Make sure that the outlet you intend to use meets the voltage, and amperage requirements listed on the serial tag of your unit. An IEC 60320 C19 receptacle is provided with the BenchTop Pro unit. If the plug does not match your receptacle, contact SP Scientific for replacement or follow the instructions below.

CAUTION! ONLY A QUALIFIED ELECTRICIAN SHOULD CONNECT THE UNIT DIRECTLY TO THE AVAILABLE ELECTRICAL SUPPLY.

The line cord has three individual conductors inside the outer jacket.[2] To make the appropriate plug connection:

1. Trim back enough of the jacket to facilitate installation of the plug.
2. The three individual conductors are BROWN, BLUE, and GREEN with a YELLOW tracer.
3. Connect the BROWN wire to the line (hot) terminal on the plug.
4. Connect the BLUE wire to the neutral terminal.
5. Connect the GREEN/YELLOW wire to the ground terminal.

Vacuum Pump Installation

A remotely mounted vacuum pump is required for the operation of your BenchTop Pro freeze dryer. The vacuum pump must be a two-stage, rotary vane, dry scroll or equivalent pump that can achieve at least 20 mT or required process vacuum, that does not exceed the maximum allowable amperage listed on the unit's serial tag and back panel label.

The following parts are included with your BenchTop Pro unit for connection to the vacuum pump:

- Four (4) feet of ¾-inch ID (Inside Diameter) rubber vacuum tubing.
- One (1) 90° rubber elbow
- One (1) plastic connector

[2] Consult SP Scientific and a qualified electrician if electrical configurations vary from standard, specified service requirements.

© SP Scientific 2017

Installing the Vacuum Pump

If you are installing a previously used vacuum pump, refer to the vacuum pump's manual and Chapter 6, General Maintenance of this manual. Ensure that the pump was properly maintained prior to installation. A vacuum pump inlet port adapter and sufficient tubing are required for connection to the vacuum pump. If you need assistance, please contact SP Scientific.

1. Position the vacuum pump in a convenient location near the freeze dryer. Ensure that the pump will be easily accessible during routine maintenance.
2. Cut the supplied vacuum tubing as short as possible. Allow enough length between the vacuum pump and the BenchTop Pro unit.

   ***Note**: Clamp and cut the ¾-inch ID vacuum hose. If you do not wish to cut the hose, it may be used at its full length, but might take up more space than necessary.*
3. Locate the inlet port on your vacuum pump.

   ***Note:** Refer to the vacuum pump's manual.*
4. Remove any material with the exception of the inlet filter screen and gasket.
5. Place the adapter on the inlet port and secure with a fitting. If an adapter is not present, contact SP Scientific.
6. Remove all objects from the vacuum pump outlet port, but retain for future use.
7. Connect the BenchTop Pro unit to the vacuum pump using the ¾-inch vacuum tubing. If connecting to a vacuum pump purchased from SP Scientific, attach the ¾-inch tubing from the BenchTop Pro to the vacuum pump intake nipple, add a tubing clamp and tighten securely.
8. Check the vacuum pump oil level. The oil level should read half way up the sight glass.

   ***Note**: Refer to your vacuum pump's manual for more information. Add oil only if necessary. Do not overfill!*

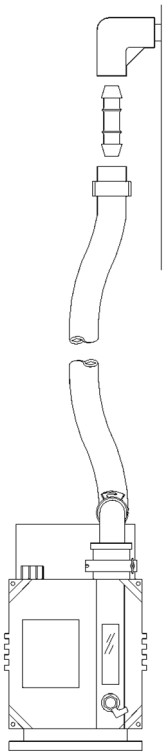

Vacuum pump

© SP Scientific 2017

9. If applicable, check the vacuum pump exhaust piping. SP Scientific suggests that the vacuum pump exhaust piping travel horizontally from the pump, across to a “T” with a drainable trap, then 90° vertically to an outside vent. Place the trap as close to the pump as possible.

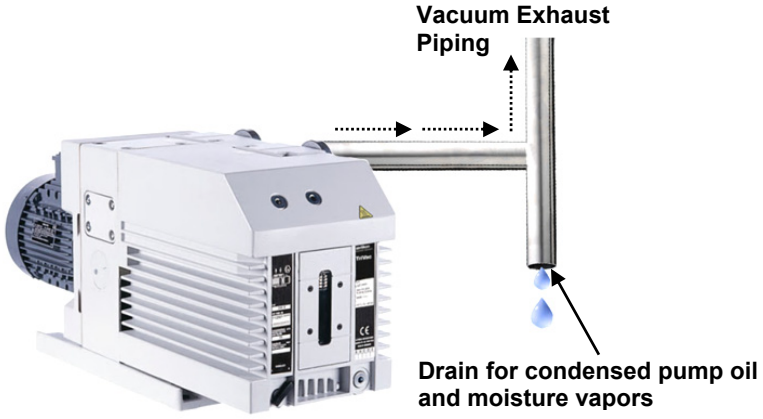

10. Verify that the power switch on the vacuum pump is off.
11. Verify that the **VAC** and **AUTO** buttons on the controller are off (*i.e.,* the buttons are not green).
12. Plug the vacuum pump into the receptacle 60320 C13 marked VACUUM PUMP on the back of the unit. The receptacle is an IEC universal outlet. This allows you to control the pump using the Omnitronics™ controller. The voltage, phase and frequency of the vacuum pump must match the voltage, phase and frequency specified on the back panel of the freeze dryer.

    Note: *You can power your vacuum pump from a wall socket if it does not have an IEC connector, but you will not be able to control the pump from the Omnitronics™ controller. Only a qualified electrician should perform installation of an IEC connector. The pump used should not exceed the amperage listed on the BenchTop Pro serial tag.*

13. Enable power to the vacuum pump by switching the pump’s power switch to the on position.

Oil Mist Eliminators

To reduce fumes from the vacuum pump and/or vent the vacuum exhaust externally, SP Scientific recommends the installation of an Oil Mist Eliminator (OME). An OME should be installed on the vacuum pump’s exhaust port (*i.e.,* the OUT port located on the top of the vacuum pump).

© SP Scientific 2017

BenchTop Pro Setup

To set up your BenchTop Pro freeze dryer:

Note: *Refer to Chapter 3, Basic Operation for complete equipment operation instructions.*

1. Install the condenser gasket (*i.e.,* black rubber ring with a slit in it) on the top of the unit. It should have a light film of vacuum grease on the outer surface.

   Note: *Only apply a light film of vacuum grease. Over greasing gaskets may contribute to a failure in system performance.*

2. Prepare the unit for your intended use.

   a. If the unit is to be used as a standalone freezer, cover the condenser with a plain cover plate to prevent air circulation from warming the samples. Skip to step 5.

   b. If the unit is to be used as a manifold dryer, place a manifold adapter plate (*i.e.,* clear acrylic or stainless steel circular disk with a hole) over the gasket. If you are using an acrylic drum manifold, place a second condenser gasket (*i.e.,* black rubber ring with a slit in it) around the bottom lip of the manifold.

   c. If you are using a vertical or T / tree-type stainless steel manifold, place the manifold directly on the condenser gasket, locating and locking the 4 notched corners.

NEVER RETIGHTEN THUMBSCREWS WHILE THE SYSTEM IS UNDER VACUUM.

3. If using a manifold, attach Quickseal valves to each port on the manifold and ensure that each is in the closed position. For more information, refer to the Quickseal valve section in *Chapter 5: Optional Components*.

   Note: *Quickseal valves are siliconized at the factory. Vacuum grease is not required.*

4. Plug the unit into an appropriate outlet and switch on the circuit breaker located on the left side of the unit. The Omnitronics™ controller will illuminate.

© SP Scientific 2017

Vacuum Baffle Plate

The BenchTop Pro 3L and 8L models include a two-position vacuum baffle plate.

Note: *A vacuum baffle plate is not available on a BenchTop Pro 9L unit.*

- **Baffle Plate on Chamber Bottom (Position 1).**
  By raising the baffle plate handle, the plate can be dropped to the bottom of the chamber. This allows you to pre-freeze items on the baffle plate. In some cases, it may be more convenient to remove the baffle plate completely and freeze items directly on the bottom of the chamber.

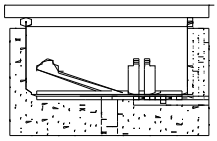

  Note: *Freeze-drying cannot be performed with the baffle on the chamber bottom (position1) as the product will remain too cold for water vapor transfer.*

- **Baffle Plate in Raised Position (Position 2).**
  Lower the baffle plate handle to raise the baffle plate when freeze-drying products directly on the baffle. This allows ice to build up on the condenser below and provides more room for the materials to be dried.

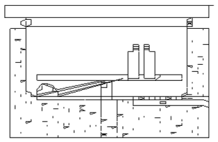

© SP Scientific 2017

Basic Operation

Chapter 3

Getting Started

Prior to operating your freeze dryer, ensure that your condenser is clean, dry and empty.

Product Preparation: Flask/Manifold Drying

BenchTop Pro units include Quickseal valves for processing samples using flasks or other glassware.

To prepare samples for freeze-drying in glassware:

1. Fill flasks with your product.[3] Do not fill more than half of the flask's total capacity. When using Wide Mouth Flasks, ensure that the filter paper and O-ring are positioned correctly within the flask cover. Snap the cover securely onto the flask.[4]
2. Pre-freeze product samples in a laboratory freezer, dry ice bath or shell bath freezer. Freezing to -40 °C is adequate for most products.[5]

Product Preparation: Drum Manifold Shelf Drying

As an alternative to using flasks, you may use an optional drum manifold and racks to dry vials of product.

To prepare samples for rack drying:

1. Fill vials or other suitable containers with product.[3] Do not fill containers to more than half of their total capacity.
2. Pre-freeze product samples. This can be accomplished directly in the condenser of BenchTop Pro 3L and 8L units, or in a laboratory freezer, dry ice bath or shell bath freezer. Freezing to -40 °C is adequate for most products.[5]

   Note: *Pre-freezing directly in the condenser cannot be done in a BenchTop Pro 9L unit.*
3. If your unit is equipped with the Stoppering-Tainer and you are processing product in vials, partially insert a split rubber stopper into each vial.
4. Load samples onto the shelf (or shelves). If you are using product probes, connect the probes to the thermocouple jacks provided.

---

[3] Refer to Appendix B for a list of standard serum vial capacities.

[4] Wide Mouth Flasks are the most popular glassware type, but other types of flasks, vials and ampoules are available. If you are not certain how to use glassware accessories, contact SP Scientific.

[5] Dry ice methods can freeze a product to approximately -78 °C, while liquid nitrogen ($N_{2(liq)}$) methods can freeze a product to approximately -190 °C.

© SP Scientific 2017

Product Preparation: Chamber Drying

BenchTop Pro 3L and 8L freeze dryers can process product in vials or trays directly in the condenser chamber.

Note: *Processing products in vials or trays directly in the condenser cannot be done in a BenchTop Pro 9L unit.*

To process samples in the chamber:

1. Fill a tray or vials with your product.[6] Do not exceed more than half of the container's total capacity.
2. Ensure that the vacuum baffle plate is in the desired position (*i.e.*, position 1 for pre-freezing or position 2 for freeze-drying).

   Note: *Refer to Chapter 2, Vacuum Baffle Plate for further information.*
3. Close and secure the chamber lid.

PRACTICAL OPERATING TIP. TO MINIMIZE DRYING TIME, ALWAYS FREEZE PRODUCTS IN AS THIN A LAYER AS POSSIBLE. NEVER FILL A CONTAINER TO MORE THAN HALF ITS TOTAL CAPACITY.

Quickseal Valves

Quickseal valves are utilized in many methods of drying. They permit the attachment of flasks for **in vitro** freeze-drying. They may also be used to break vacuum after a cycle completes. Quickseal valves operate as follows:

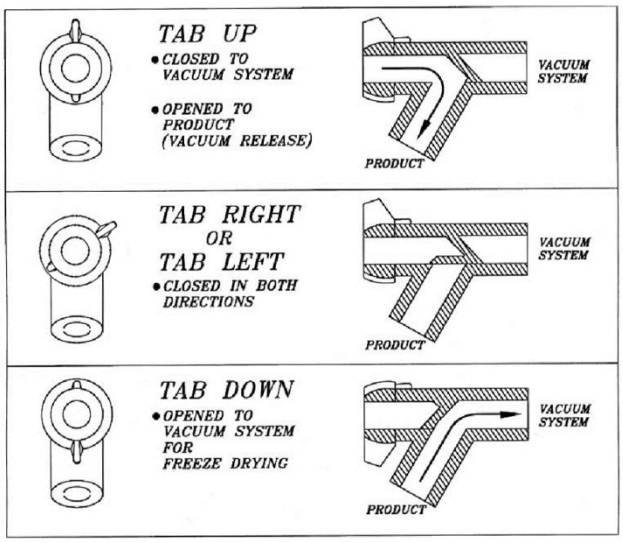

Note: *Quickseal valves are an integral part of the freeze-drying process and must be maintained as such. For information regarding upkeep and service of Quickseal valves, see the General Maintenance section of this manual.*

---

[6] Refer to Appendix B for a list of standard serum vial capacities.

© SP Scientific 2017

Basic Operation Instructions

1. Ensure that the condenser is clean, dry and empty before proceeding. Check the drain line for residual moisture, which can cause slow vacuum pump-down.
2. Ensure that the plastic quick-connect drain fitting is not inserted into the drain fitting receptacle on the front of the unit.
3. Pre-freeze the product to a minimum of -40 °C.
4. Check that all connections and ports are secure. Ensure that Quickseal Valves are closed.

   Press the **COND** button to begin cooling the condenser. Wait for the condenser to reach the controller's Condenser Threshold setpoint (*i.e.,* -40 °C). Before proceeding, confirm that the condenser temperature on the System Status screen has reached the Condenser Threshold setpoint (*i.e.,* -40 °C).

   Alternatively, press the **AUTO** button and allow the system to proceed through the freeze-drying process using the controller's settings. If using the **AUTO** function, skip to step 7.

   Note: *The Condenser Threshold setpoint is configured at the manufacturing facility.*
5. Enable vacuum by pressing the **VAC** button. Allow the system to evacuate. Before proceeding, confirm that the current vacuum level displayed on the System Status screen is at the desired vacuum level.

   Note: *If your vacuum pump is not connected to the BenchTop Pro unit, the Omnitronics™ controller will not be able to enable it. Switch on the vacuum pump manually. See your vacuum pump manual for more information.*
6. Add product as appropriate:
   - If using a manifold, attach a flask to a Quickseal valve and turn the valve to the open position to begin the freeze-drying process. Allow the vacuum level to recover to your vacuum control setpoint (at least 200 millitorr) before connecting additional flasks.
   - If using a vacuum concentrator with your BenchTop Pro, add samples and begin spinning.

     Note: *For more information, refer to* *Chapter 4, Cold Trap Condenser*.
7. Ensure that critical system parameters stay within the acceptable ranges (*i.e.,* refrigeration and vacuum). The condenser temperature and vacuum pressure values displayed on the System Status screen appear as green or red, providing an easy status check. Periodically check the condenser for ice build-up and defrost as needed.
8. Observe the product to determine when drying is complete. For manifold drying, the drying process is typically complete when the exterior glassware reaches ambient temperature and the product appears dry (*i.e.,* approximately 90 to 95% of the moisture has been removed). Lower moisture content may be achieved by allowing the product to continue to dry for several hours.

© SP Scientific 2017

9. For heated shelf and chamber drying, the process is complete when one or more of the following conditions are met:
   - The condenser approaches its maximum low temperature.
   - System vacuum approaches a constant low pressure reading.
   - Appearance of the product indicates dryness (*i.e.,* uniformly powdery or fluffy).
10. Switch off the vacuum and refrigeration systems. If running an automatic cycle, press the **AUTO** button to disable both systems simultaneously.
11. For manifold flask drying, close Quickseal valves and remove flasks. If using a vacuum concentrator, turn off the unit and close Quickseal valves. If using a chamber or manifold with shelves, break vacuum and remove the product.
12. If your system is still under vacuum, release vacuum by inserting the drain plug into the drain fitting or by opening a Quickseal valve.
13. After removing all product, press the **DEFR** button to enable condenser defrost. The defrost function allows ice to be lifted out of the condenser without fully melting. A drain line is connected to a plastic quick-connect fitting, which is then inserted into the drain receptacle on the front of the unit. To open the drain, push the fitting into the drain receptacle. To close the drain line, press the small gray release button on the top of the receptacle. The fitting will pop out.
    Note*: The quick-connect fitting must be removed prior to freeze-drying or the appropriate vacuum pressure will not be achieved.*
14. Once the ice has melted away from the condenser, the ice can be removed. Thoroughly clean and rinse the condenser with a mild detergent or baking soda solution (to neutralize acids).
    Note*: Do not chip away at the ice, as this may damage the condenser. Refer to Appendix D, Chemical Resistance Charts for further information.*
15. The defrost system turns off automatically after one (1) hour or when the condenser reaches 60.0 °C (140.0 °F). To deactivate the defrost process manually, press the green **DEFR** button.

© SP Scientific 2017

Meltback

Products that have low freezing points are prone to meltback during freeze-drying. Meltback is a term used to describe when the product melts or defrosts before sublimation completes. The following suggestions may help to prevent meltback:

- Decrease the volume and depth of the product.
- Insulate the product container to slow down sublimation caused by an ambient heat source.
- Decrease the amount of product or number of samples connected.
- Verify that the equipment is functioning properly and ensure that room temperature is sufficient to assist the air-cooled refrigeration system.
- Consider diluting the product with water.

For products that dry readily, alternative heat sources such as a heat lamp may be used to expedite the freeze-drying process.

Preventing Glassware Breakage

- Avoid cleaning glassware with a wire brush as metal-to-glass abrasion creates microscopic scratches which can cause breakage.
- Never fill a flask to more than half of its total capacity (*e.g.,* a 600 mL flask has a working capacity of 300 mL).
- When pre-freezing samples in a storage freezer, position glassware at a 30° to a 45° angle to increase surface area and reduce stress on the glass.
- To prevent glass-to-glass abrasion when placing flasks in glassware washers, do not allow contact with metal racks or other glassware.

Product Dryness End Point

Because the glassware is exposed to the open air during manifold drying, you can clearly observe drying rates. However, this exposure to ambient temperatures may cause environmental moisture to condense and freeze on the cold outer surface of the flask. This is normal.

As the product ice inside the glassware gradually sublimes, the frost on the outside of the glassware slowly recedes and eventually disappears. When glassware becomes completely free of exterior frost, approximately 99% of moisture has been removed from the product. You can assume drying is complete (*i.e.,* <1% moisture content) when the exterior of the glassware is at room temperature.

© SP Scientific 2017

© SP Scientific 2017

Cold Trap Condenser

Overview

BenchTop Pro freeze dryers can be utilized as a Cold Trap Condenser Module to condense and collect vapors being driven out of a product located in a vacuum concentrator.

Under conditions of high vacuum, vapor pressure of the solvent collecting on the condenser is much lower than that of the product. When vapor molecules leave the product in a vacuum concentrator, they migrate toward low-pressure areas in the condenser. Upon contact with the condenser, the vapors release their heat energy and condense. Whether or not ice forms is dependent on the chemical properties of the solvent. Efficient evaporation rates are dependent on maintaining this vapor pressure differential.

These migrating vapors can be pulled directly into the vacuum pump if condensing does not occur. Condensing the vapors prevents them from migrating to the vacuum pump and causing damage.

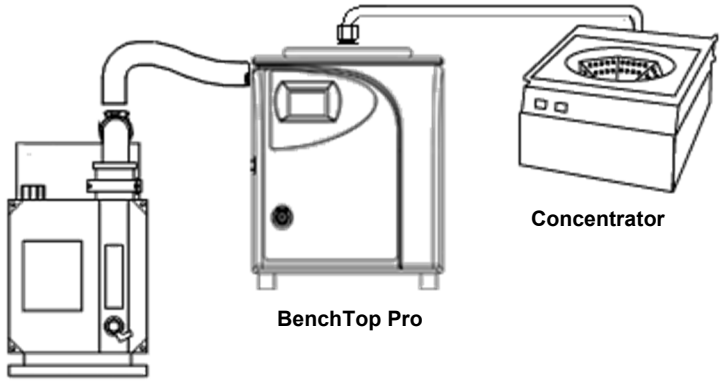

Product Requirements

Before using a Cold Trap Condenser, consider the following:

- Freezing and condensing points of solvents.
- Overall volume.
- Solvent properties, such as toxicity.

***Note**: This process is completely product dependent, so each application will vary in terms of temperature requirements and process time.*

© SP Scientific 2017

Cold Trap Setup

The following instructions will help you utilize your BenchTop Pro unit as a cold trap to condense vapors from a gel dryer or vacuum concentrator:

1. Position the vacuum concentrator, BenchTop Pro unit and vacuum pump in a convenient location with sufficient space to connect all components easily.
2. Place the vacuum cover plate (*i.e.,*acrylic plate with stainless steel elbow) on the gasket of the BenchTop Pro unit.
3. Connect the BenchTop Pro unit to the vacuum concentrator using ¾-inch tubing.

   Note: *¾ inch tubing is supplied with the purchase of a vacuum pump.*
4. Estimate the length of tubing required to adequately reach the back of the vacuum concentrator without any tension.
5. If necessary, cut the tubing to the proper length and secure both ends with tubing clamps.
6. Connect the vacuum pump to your BenchTop Pro unit as described in *Chapter 2, Installation and Setup*.

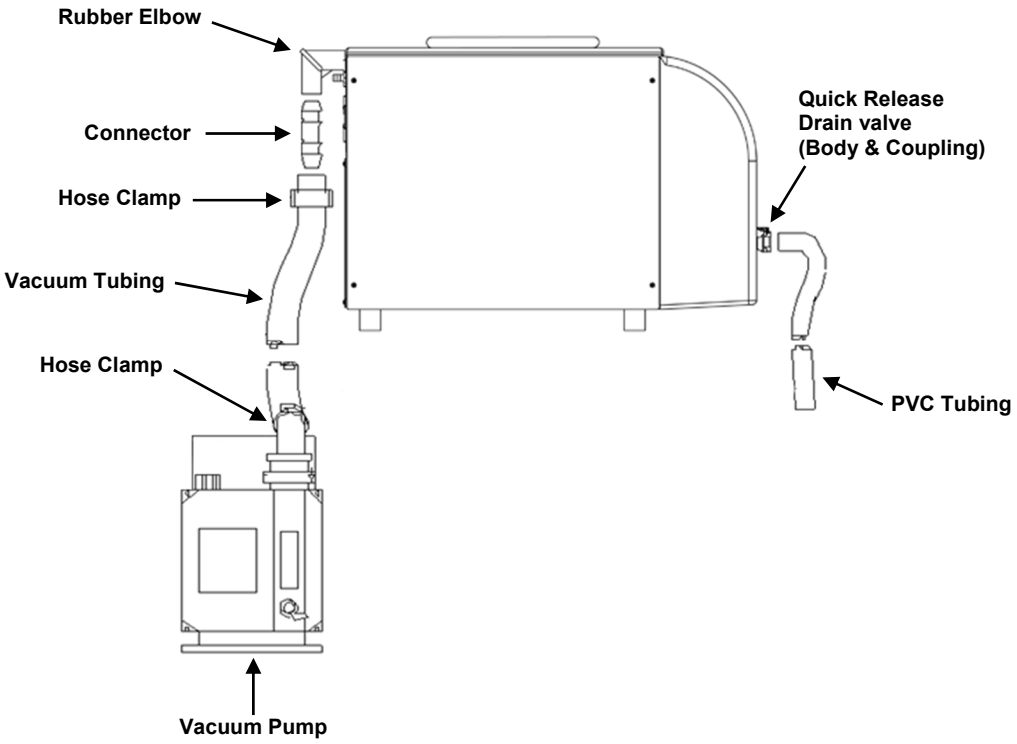

© SP Scientific 2017

Chapter 5

Accessories and Options

VirTis BenchTop Pro units offer a wide variety of optional components to match an assortment of product or process applications.

Manifolds

Many manifolds are available for BenchTop Pro freeze dryers. Optional manifolds include VirTis ¾-inch (19 mm) Quickseal valves for attaching a variety of flasks, bottles or vials. Stainless steel vertical manifolds are available for flask drying, while stainless steel and acrylic drum manifolds are available for the versatility of both flask and shelf rack drying.

Available manifolds include (listed from left to right):

- Stainless steel vertical manifold with 12 ports.
- Stainless steel drum manifold with 18 ports.
- Vertical acrylic drum manifold with 8 or 12 ports.
- Stainless steel tree-type manifold with 8 or 12 ports

For more information about manifolds and product availability, contact SP Scientific.

© SP Scientific 2017

Shelf Racks

VirTis BenchTop Pro units have shelf racks available for use with the optional stainless steel and acrylic drum manifolds. Racks are available in both heated and unheated configurations.

Available rack assemblies include:

- Bulk processing 3-shelf rack with heated or non-heated shelves.

For more information about shelf racks and product availability, contact SP Scientific.

© SP Scientific 2017

Liquid Nitrogen Trap

The optional Liquid Nitrogen ($N_{2(liq)}$) Trap protects your vacuum pump from the corrosive properties of acid and alkaline vapors, as well as the low temperatures and organic solvents associated with the freeze-drying process. The trap is available in both 2.8- and 5-liter capacities.

WARNING! LIQUID NITROGEN CAN CAUSE SEVERE CRYOGENIC BURNS. EXERCISE CAUTION WHEN HANDLING. WEAR PROTECTIVE GLOVES AND AVOID SKIN CONTACT.

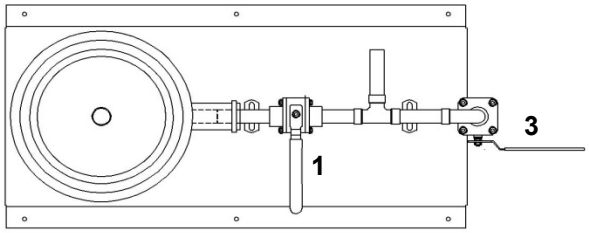

Top View

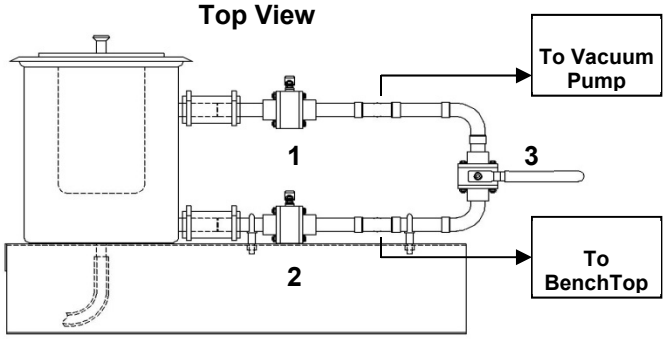

Side

To operate a liquid nitrogen trap:

1. Enable the condenser and wait for the system to reach normal operating temperature.
2. Remove the plastic cover from the stainless steel vessel and add a small amount of liquid nitrogen to the center well. If adding liquid nitrogen from a tank, use adequate ventilation to protect from gaseous vapors.

   ***Note**: The liquid nitrogen will expand and bubble when it meets the warm center well. Wear protective eyewear and gloves to avoid contact with skin.*
3. Replace cover and wait one (1) minute.
4. Open the center well and slowly fill it with liquid nitrogen (2.8- or 5-liters, depending on capacity).
5. Open valves 1 and 2, and close valve 3 (see diagram).
6. Enable the vacuum and wait until vacuum pressure reaches 100 mT.
7. The trap is now in operation. Over time, Liquid Nitrogen evaporates rapidly and solvent is condensed. Check center well often and refill with liquid nitrogen as needed.

© SP Scientific 2017

Filter Trap

VirTis filter traps protect your vacuum pump from damaging and corrosive vapors released during freeze-drying. If purchased, the filter trap is typically located between your freeze dryer and the vacuum pump.

Disposable Sodasorb®, activated charcoal and molecular sieve trap drop-in wire mesh cartridges are available and must be purchased separately.

To install the filter trap:

1. Connect the vacuum pump to the port marked OUT.
2. Connect the rest of the system to the port marked IN.

Degassing Filter Trap Cartridges

Filter trap cartridges are highly absorbent and may require degassing prior to freeze-drying. If you do not degas filter trap cartridges, vacuum pump pull-down time be increased. Degassing is necessary each time you change your filter trap cartridge. Most filters require an overnight degassing to achieve proper vacuum.

To degas the filter trap cartridge:

1. Unscrew the clear polypropylene housing from the white plastic top.
2. To begin degassing, enable the vacuum pump, open the gas ballast valve slightly and close all ports.

   ***Note**: See Vacuum Pump Gas Ballast Valve in Chapter 6, General Maintenance for more information.*

3. Degassing is complete when vacuum pressure reaches 50 mT or less.

   ***Note**: Degassing may take between 12 and 24 hours.*

4. Once vacuum pressure reaches 50 mT or less, close the gas ballast then turn off the vacuum pump.

Filter trap cartridges are disposable. Their lifespan depends on frequency of use and the volume of contaminants they absorb. The Sodasorb® cartridges contain an “Absorbent Exhaustion Indicator,” which turns purple to signify the need for replacement. Full exhaustion is indicated by a deep purple color.

The activated charcoal cartridges contain no absorption limit indicator. Pump oil must be routinely checked for clarity to assess the charcoal’s absorbing capacity. Depending on the usage and concentration, changing the charcoal cartridge every three to six months may suffice.

WARNING! BE SURE TO PROPERLY HANDLE AND DISPOSE OF USED CARTRIDGES.

© SP Scientific 2017

Stoppering-Tainer

The Stoppering-Tainer mechanism manually applies pressure to partially-inserted stoppers, forcing them into the vials. Manual stoppering must be performed with evenly distributed vials of equal height to ensure uniform stoppering force distribution and prevent vial shifting. Vials should contain pre-frozen product.

Stoppering-Tainer Operation

1. Place an evenly distributed amount of vials containing pre-frozen product and partially inserted rubber stoppers into the Stopping-Tainer stainless steel container.
2. Place the Stoppering-Tainer top plate on the opening of the stainless steel container. The top plate should seal to the container with an O-ring.
3. Turn the Stoppering-Tainer handle until the clear stoppering plate is almost touching the stoppers.
4. Fit the 1/2” Hose Nipple (located on the top plate) into a Quik-Dry valve, or connect it to an existing auxiliary port using rubber tubing and the appropriate adapters.
5. After system drying is complete but while the system is under vacuum, turn the Stoppering-Tainer handle clockwise to firmly press the stoppers into the vials.
6. Once stoppering and the system process is complete, disconnect the Stoppering-Tainer hose nipple, and remove the top plate by turning the Stoppering-Tainer handle in the opposite direction.
7. Remove the vials from the Stoppering-Tainer stainless steel container.

© SP Scientific 2017

© SP Scientific 2017

General Maintenance

Proper routine maintenance is the key to an efficiently operating unit with minimal downtime. The following section provides instructions on how to maintain your BenchTop Pro freeze dryer.

Vacuum System

Vacuum Pump

Clean oil is necessary for the best vacuum and overall efficiency of the system. Checking and changing the oil on a consistent basis will greatly extend the life of the vacuum pump.

Check the vacuum pump oil after each freeze-dry cycle by draining a small amount (~ 100 mL) from the pump drain line. Use a clear container to capture the sample. Oil should be changed as needed.

When visually inspecting vacuum pump oil, use the following guidelines:

- Pale yellow or clear vacuum pump oil indicates good condition.
- Dark vacuum pump oil indicates acid contamination.
- Cloudy gray vacuum pump oil indicates water contamination.

Changing Vacuum Pump Oil

Change the oil immediately after shutting down the freeze dryer while the oil is still hot.
***Note**: Consult your vacuum pump's manual for more information.*

1. Protect your hands from the hot oil.
2. Make sure vacuum is released from the system.
3. Remove the top fill plug and open the drain valve located at the bottom of the pump. Drain the contaminated oil into a suitable container.
4. When the oil has completely drained, close the valve and add new oil to the pump while visually checking the sight glass to ensure proper level (*i.e.,* near the MAX line). Reinstall the fill plug.
5. If the pump oil was contaminated, operate the vacuum pump for about 10 to 15 minutes with the new oil to flush any residual oil from the system's interior components. Repeat steps 3 and 4 to complete the process.

PROPERTY CAUTION! OIL MUST BE CHECKED AND CHANGED FREQUENTLY IF YOUR PRODUCT CONTAINS CORROSIVE MATERIALS OR ORGANIC SOLVENTS. IN ADDITION, A FILTER TRAP MAY BE INSTALLED TO PROTECT THE VACUUM PUMP.

© SP Scientific 2017

Clearing the Vacuum Pump Maintenance Alarm

The Vacuum Pump Maintenance Alarm will generate after the number of vacuum pump running hours (*i.e.,* Current Hours) has exceeded the Vacuum Pump Maintenance Alarm Setpoint, both of which are located on the Vacuum Pump Maintenance screen. Before the alarm is cleared, check if any routine maintenance is needed for the vacuum pump (*e.g.,* oil needs to be changed). Once the vacuum pump is checked and any needed maintenance is complete, the Current Hours may be reset and the alarm may be cleared. To reset the Current Hours and clear the alarm:

1. Ensure that the System Status screen on the Omnitronics™ controller is open.
2. Press the **MENU** button.
3. Press the **Maintenance** button.
4. Press the **Vac Pump Maint** button.
5. Press the **VAC Reset** button. A confirmation popup will open.
6. Press the **YES** button to set the Vacuum Pump Current Hours to zero (0).
7. Press the back button twice to return to the Main Menu screen.
8. Press the **Alarms** button on the Main Menu screen.
9. Press the **Active Alarms** button.
10. Press the **magnifying glass** button(s) and locate the Vacuum Pump Maintenance Alarm.
11. Press the **Reset** button for the Vacuum Pump Maintenance Alarm.
12. Press the **Esc** button to return to the Alarms Screen.
13. Press the back button twice to return to the System Status screen.

Scheduling Oil Changes

After clean oil is loaded into the vacuum pump and all necessary connections have been made between the vacuum pump and the freeze dryer, perform a full capacity test cycle.

Have a qualified technician check the oil after the test cycle. If the oil appears dirty, change the oil after every use. If the used oil appears clean, change the oil after the next two uses or cycles. If the oil remains clean after two cycles, change the oil after the next four cycles. Continue to monitor the vacuum pump oil after each cycle until a change of condition is noted or a period of one month has elapsed. If the oil remains clean after several cycles, changing the oil once per month may be sufficient.

Vacuum Tubing and Gaskets

Inspect tubing and gaskets periodically for signs of wear. Check gaskets by removing and inspecting interior surfaces for potential problems. A light coating of vacuum grease on the exterior surfaces will protect gaskets and tubing. Reapply grease as needed.

© SP Scientific 2017

Condenser Gasket

The condenser gasket should be removed routinely and inspected for cracks.

To check the condenser gasket:

1. Remove the condenser gasket.
2. Take the gasket in both hands and turn it inside out.
3. Inspect the inside of the gasket. This is where you are most likely to find a potential problem.
4. If you find the slightest inconsistency in the surface of the material, replace the gasket as soon as possible (*e.g.,* cuts, cracks, dry rot, rippling).
5. Always install gaskets on a clean, grease-free metal rim. Remove excess grease from the metal using isopropyl alcohol on a fresh paper towel or clean cloth. Clean the gasket with isopropyl alcohol.
6. Once the new or cleaned gasket is installed, apply a very thin coating of high vacuum grease to the outer surface of the gasket only. The gasket should appear moist.

Vacuum Pump Gas Ballast Valve

The gas ballast valve removes some contaminants from the pump oil. During freeze-drying or cold trap use, vapors may bypass the condenser and end up in the vacuum pump. If this occurs, the vapors will degrade the oil causing excessive wear and poor vacuum pressure.

When the ballast is open, it allows a controlled amount of air into the second stage pump cylinder. This reduces the partial pressure, increases the pump's operating temperature and releases the vapors.

Note*: Refer to the vacuum pump manual for the location of the gas ballast valve.*

Quickseal Valves

VirTis BenchTop Pro units come equipped with Quickseal valves. These valves should be serviced at least once a year.

To service a Quickseal valve:

1. Remove a valve from its port.
2. Twist and pull the white selector until it's dislodged from the black rubber body.
3. Clean the valve thoroughly with isopropyl alcohol to remove grease and dirt.
4. Inspect the cleaned selector carefully for damage.

   Note*: Do not use a broken flask adaptor, as it can damage the white selector.*
5. If scratches or cracks are found, the selector part(s) should be replaced.
6. Apply a thin film of high vacuum grease to an acceptable selector and reassemble the valve.
7. Repeat for all remaining Quickseal valves.

© SP Scientific 2017

Refrigeration System

The Air-Cooled Condenser

It is very important to keep the air-cooled condenser clean. This is where high-pressure vapor from the compressor is converted to liquid refrigerant by rejecting the heat gained from the vapor condenser into the ambient air. Reduced airflow over the condenser can result in severely reduced performance and may shorten the life of the compressor.

To maintain the air-cooled condenser and compressor:

1. Do not allow any paper products or cloth to slip underneath the unit (*e.g.,* paper towels, Kimwipes®). These items will obstruct the airflow.
2. Always maintain at least four (4) inches of clearance on all sides of the unit.
3. Maintain the room temperature at approximately 20 °C. Higher temperatures may result in reduced performance and shortened compressor life.
4. Clean the fins on the bottom of the unit. Dust buildup may cause the unit to malfunction.

Keep these fins clean.

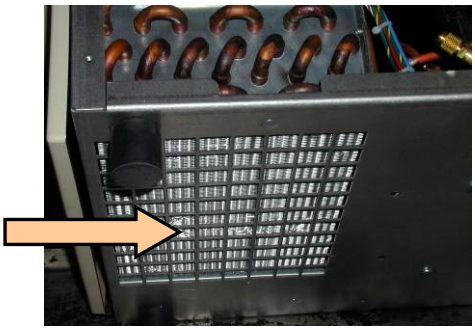

Condenser Chamber

The condenser is fabricated from stainless steel. Under normal use, it can be rinsed and kept clean with mild detergent. If corrosive materials are being freeze-dried, thoroughly clean and rinse all parts of the freeze dryer that come in contact with product vapor. Add baking soda or a mild buffering agent to the rinse water to help neutralize acidic residue. A siphon-type squeeze bottle can be used to direct the rinse spray into difficult to reach areas.

Refer to *Appendix C, Stainless Steel Cleaners* for more information.

© SP Scientific 2017

Appendix A: Troubleshooting

Vacuum Problems

Remember that maximum vacuum is only achievable with a clean, dry system. Initial vacuum will be affected by the amount of product loaded on the unit. For efficient freeze-drying, vacuum pressure should be below 200 millitorr. When using Quickseal valves, product may need to be introduced in stages to keep the vacuum below acceptable levels.

Consider the following when attempting to pinpoint vacuum-related problems:

- Was the condenser defrosted and drained after the last run?
- Is the chamber clean and dry?
- Is the drain fitting inserted into the drain receptacle? If so, it must be removed.
- Are all accessory ports, valves and filters closed tightly? Check all connections for integrity.
- Is the door gasket clean and properly greased?
- Are all Quickseal valves in the closed position?
- Are the Quickseal valves in good condition? Is a light coating of vacuum grease visible on the valve plug and on the stainless steel valve port?
- Is the vacuum pump oil clean and at the proper level? Check sight glass.
- Is the condenser maintaining the proper temperature? If the temperature rises due to refrigeration problems, moisture may be leaving the condenser walls and migrating to the vacuum pump, causing poor vacuum.

If none of the above applies, try to isolate the problem by removing the manifold or the vacuum cover plate and placing a stopper in the vacuum intake tube at the bottom of the condenser. This will seal the vacuum tube. When the vacuum pump is operated, check the components between the pump and the end of the tube.

If you get a vacuum reading below 500 millitorr within one (1) minute, you can rule out any problem with the vacuum's pump probe or tubing connections. Recheck the manifold and gasket for joint separations and dirty or rough surfaces.

If you do not get a normal vacuum reading on the Omnitronics™ controller display or vacuum gauge within one (1) minute, start checking components individually.

© SP Scientific 2017

If none of these suggestions eliminates the vacuum problem:

1. Change and flush the oil in the vacuum pump.
2. Disassemble all vacuum tubing connections, clean with a mild alcohol (such as methanol), apply a light coating of vacuum grease and reassemble.
3. Check all threaded and welded connections and seal with vacuum sealant.

If poor vacuum persists, or if testing vacuum with a calibrated gauge indicates a good vacuum reading, the problem is likely related to the vacuum probe. Replace the vacuum probe and retest.

***Note**: If this does not resolve your vacuum problem, contact SP Scientific for assistance.*

Product Melting

The most common reason for product melting is poor vacuum. Adequate vacuum is required to keep products in a frozen state. Check for a vacuum leak or possible restrictions in the vacuum hose as described in the previous section.

If the unit is functioning properly but the product is still melting, the product's freezing point (eutectic temperature) may be too low to remain in a frozen state. Retest using a water sample to determine if a mechanical or product-related problem exists.

© SP Scientific 2017

Appendix B: Serum Vial Capacities

VirTis Part Number	Height (mm)[7]	Body OD (mm)	Capacity (mL)
179077[8]	35	18	**2**
179275[9]	85	12	**2**
179101[8]	40	22	**6**
179085	47	23	**5**
179143[8]	50	23	**10**
179135	54	26	**10**
178855[8]	62	28	**20**
178830	58	33	**20**
178897	63	37	**30**
178921	73	43	**50**
178954	95	52	**100**
178988	**107**	**54**	**125**

[7] Add 8mm for partially inserted stopper.

[8] Thin Wall.

[9] Special Stoppering Ampoule (add 10mm for partially inserted stopper).

© SP Scientific 2017

© SP Scientific 2017

Appendix C: Stainless Steel Cleaners

The following table lists possible problem situations and suggests corrective actions. For additional information, contact SP Scientific.

Cleaning Required	Cleaning Agent[10]	Application Method[11]	Effect on Finish
HEAT TINT OR HEAVY DISCOLORATION	Penny-Brite or Copper-Brite	Use in direction of polish lines on No. 4 (polished) finish. Wipe with dry cloth.	**May scratch No. 2 (mil) and Nos. 7 and 8 (polished) finishes.**
	Paste Nu-Steel, DuBois Temp, Tarnite, or Kelox	Rub with dry cloth or stainless steel wool.	**Use in direction of polish lines on No. 4 (polished) finish. May scratch No. 2 (mil) and No. 7 and 8 (polished) finishes.**
	Revere Stainless Steel Cleaner, Take-Off, or AC-60	Apply with damp sponge or cloth.	**Use in direction of polish lines on No. 4 (polished) finish. May scratch No. 2**
	Allen Polish, Steel Bright, Wyandotte, Bob-O, Zud, Dubrite, or Prepare Dex	Rub with a damp cloth.	**Use in direction of polish lines on No. 4 (polished) finish. May scratch No. 2 (mil) and Nos. 7 and 8 (polished) finishes.**
TENACIOUS DEPOSITS, RUSTY DISCOLORATIONS, INDUSTRIAL ATMOSPHERIC STAINS.	Oakite No. 33, Dilac, Texo 12, Texo N.Y., Flash-Klenz, Caddy Cleaner, Turco Scale 4368, or Permag 57	Swab and soak with clean cloth. Allow to stand 15 minutes or more, per directions on package. Then rinse and dry.	**Satisfactory for use on all finishes.**
HARD WATER SPOTS AND SCALE.	Vinegar	Swab or wipe with cloth. Rinse with water and dry.	**Satisfactory for use on all finishes.**
	Dilac, Oakite No 33, Texo 12, Texo N.Y.	**Swab with cloth or soak. Let stand 10-15 minutes. Always follow with neutralizer rise, and dry.**	**Satisfactory for use on all finishes. Effective on tenacious deposits or where scale has built up.**

[10] Use of proprietary names is only intended to indicate a type of cleaner, and does not constitute any endorsement (nor does omission of any proprietary name imply its inadequacy). All products should be used in strict accordance with instructions and warnings on the product package.

[11] In all applications, a stainless steel wool, sponge fibrous brush, or pad is recommended. Avoid use of ordinary steel wool or steel brushes for scouring stainless steel.

© SP Scientific 2017

© SP Scientific 2017

Appendix D: Chemical Resistance Charts

Acrylic Parts

Clean acrylic covers and manifolds with a mild detergent. Use a soft cloth or Kimwipes® to avoid scratching the acrylic.The following table may be used as a general guide to acrylic chemical resistances.

Chemical	Code	Chemical	Code	Chemical	Code
Acetic Acid (5%)	R	Ethyl Acetate	NR	Nitric Acid (10%)	R
Acetic Acid (Glacial)	NR	Ethyl Alcohol (50%)	LR	Nitric Acid (40%)	LR
Acetic Anhydride	LR	Ethyl Alcohol (95%)	NR	Nitric Acid (Conc.)	NR
Acetone	NR	Ethylene Dichloride	NR	Oleic Acid	R
Acetonitrile	NR	Ethylene Glycol	R	Olive Oil	R
Ammonium Chloride (Saturated)	R	2-Ethylhexyl Sebacate	R	Phenol Solution (5%)	NR
Ammonium Hydroxide (10%)	R	Formaldehyde (40%)	R	Soap Solution (Ivory)	R
Ammonium Hydroxide (Conc.)	R	Gasoline (Regular, Leaded)	LR	Sodium Carbonate (2%)	R
Aniline	NR	Glycerine	R	Sodium Carbonate (20%)	R
Battery Acid	R	Heptane	R	Sodium Chloride (10%)	R
Benzene	NR	Hexane (Commercial Grade)	R	Sodium Hydroxide (1%)	R
Benzyl Alcohol	NR	Hydrochloric Acid	NR	Sodium Hydroxide (10%)	R
Butyl Acetate	NR	Hydrofluoric Acid (40%)	R	Sodium Hydroxide (60%)	R
Calcium Chloride (Sat.)	R	Hydrogen Peroxide (3%)	R	Sodium Hypochlorite (5%)	R
Calcium Hypochlorite	R	Hydrogen Peroxide (28%)	NR	Sulfuric Acid (3%)	R
Carbon Tetrachloride	NR	Isooctane	R	Sulfuric Acid (30%)	R
Chloroform	NR	Isopropyl Alcohol	LR	Sulfuric Acid (Conc.)	NR
Chromic Acid (40%)	NR	Kerosene	R	Toluene	NR
Citric Acid (10%)	R	Lacquer Thinner	NR	Transformer Oil	R
Cottonseed Oil (Edible)	R	Methyl Alcohol (50%)	LR	Trichloroethylene	NR
Detergent Solution (Heavy Duty)	R	Methyl Alcohol (100%)	NR	Turpentine	LR
Diesel Oil	R	Methyl Ethyl Ketone (MEK)	NR	Water (Distilled)	R
Diethyl Ether	NR	Methylene Chloride	NR	Xylene	NR
Dimethyl Formamide	NR	Mineral Oil	R	Trifluroacetic Acid	NR
Dioctyl Phthalate	NR	Naphtha (VM&P)	R		

CODES

R = Resistant (withstands long periods of exposure at temperatures up to 50 °C).

LR = Limited Resistance (withstands short periods of exposure at room temperature).

NR = Not Resistant (immediate damage may occur upon exposure).

PROPERTY CAUTION! DO NOT USE ORGANIC SOLVENTS OR ABRASIVE CLEANERS.

BenchTop Pro Bezel (ABS)

© SP Scientific 2017

The following table may be used as a general guide to ABS chemical resistances.

Chemical	Concentration	Resistance Level 20 °C / 68 °F
Acetaldehyde	-	SE
Acetic Acid	10%	EX
Acetic Acid	glac./anh.	SE
Acetic Anhydride	-	SE
Aceto-Acetic Ester	-	SE
Acetone	-	SE
Other Ketones	-	SE
Acetonitrile	-	ND
Acetylene	-	ND
Acetyl Salicylic Acid	-	SE
Acid Fumes	-	SE
Alcohols	-	SE
Aliphatic Esters	-	SE
Alkyl Chlorides	-	SE
Alum	-	EX
Aluminium Chloride	-	EX
Aluminium Sulphate	-	EX
Ammonia, Anhydrous	-	EX
Ammonia, Aqueous	-	EX
Ammonium Chloride	-	EX
Amyl Acetate	-	SE
Aniline	-	SE
Antimony Trichloride	-	EX
Aqua Regia	-	SE
Aromatic Solvents	-	SE
Ascorbic Acid	-	SE
Beer	-	EX
Benzaldehyde	-	EX
Benzene	-	SE
Benzoic Acid	-	EX
Benzoyl Peroxide	-	EX
Boric Acid	-	EX
Brines, Saturated	-	EX
Bromide (K) Solution	-	EX
Bromine	-	SE
Bromine Liquid, Tech.	-	SE
Bromine water, Saturated Aqueous	-	SE
Butyl Acetate	-	ND
Calcium Chloride	-	EX

CODES
EX = Excellent Resistance
SE = Severe Effect
ND = No Data

Carbon Disulphide	-	SE
Carbonic Acid	-	EX

© SP Scientific 2017

Chemical	Concentration	Resistance Level 20 °C / 68 °F
CarbonTetrachloride	-	SE
Caustic Soda & Potash	-	EX
Cellulose Paint	-	ND
Chlorates of Na, K, Ba	-	EX
Chlorine, dry	-	EX
Chlorine, wet	-	EX
Chlorides of Na, K, Ba	-	EX
Chloroacetic Acid	-	SE
Chlorobenzene	-	SE
Chloroform	-	SE
Chlorosulphonic Acid	-	SE
Chromic Acid	80%	EX
Citric Acid	-	EX
Copper Salts	most	EX
Cresylic Acids	50%	SE
Cyclohexane	-	SE
Detergents, Synthetic	-	EX
Emulsifiers, Concentrated	-	ND
Esters	-	SE
Ether	-	SE
Fatty Acids	>C6	EX
Ferric Chloride	-	EX
Ferrous Sulphate	-	EX
Fluorinated Refrigerants	-	SE
Fluorine, dry	-	SE
Flourine, wet	-	SE
Fluorosilic Acid	-	SE
Formaldehyde	40%	EX
Formic Acid	-	EX
FruitJuices	-	EX
Gelatine	-	EX
Glycerine	-	EX
Glycols	-	SE
Glycol, Ethylene	-	EX
Glycolic Acid	-	SE
Hexamethylene Diamine	-	ND
Hexamine	-	SE
Hydrazine	-	ND
Hydrobromic Acid	50%	EX
Hydrochloric Acid	10%	EX
Hydrochloric Acid	conc.	EX

CODES
EX = Excellent Resistance
SE = Severe Effect
ND = No Data

Hydrocyanic Acid	-	EX
Hydrofluoric Acid	40%	EX

© SP Scientific 2017

Chemical	Concentration	Resistance Level 20 °C / 68 °F
Hydrofluoric Acid	75%	SE
Hydrogen Peroxide	30%	EX
Hydrogen Peroxide	30 - 90%	SE
Hydrogen Sulphide	-	ND
Hypochlorites	-	EX
Hypochlorites	Na 12-14%	EX
Iso-Butyl-Acetate	-	ND
Lactic Acid	90%	EX
Lead Acetate	-	EX
Lead Perchlorate	-	ND
Lime (CaO)	-	EX
Maleic Acid	-	EX
Manganate, Potassium (K)	-	EX
Meat Juices	-	EX
Mercuric Chloride	-	EX
Mercury	-	EX
Methanol	-	SE
Methylene Chloride	-	SE
Milk Products	-	EX
Moist air	-	EX
Molasses	-	EX
Monoethanolamine	-	SE
Naptha	-	EX
Napthalene	-	SE
Nickel Salts	-	EX
Nitrates of Na	K and NH3	EX
Nitric Acid	<25%	SE
Nitric Acid	50%	SE
Nitric Acid	90%	SE
Nitric Acid (fuming)	-	SE
Nitrite	Na	EX
Nitrobenzene	-	SE
Oils, Diesel	-	ND
Oils, Essential	-	EX
Oils,Lubricating + Aromatic Additives	-	SE
Oils, Mineral	-	EX
Oils, Vegetable and Animal	-	EX
Oxalic Acid	-	EX
Ozone	-	SE
Paraffin Wax	-	EX
Perchloric Acid	-	ND

CODES
EX = Excellent Resistance
SE = Severe Effect
ND = No Data

Petroleum Spirits	-	SE
Phenol	-	SE

© SP Scientific 2017

Chemical	Concentration	Resistance Level 20 °C / 68 °F
Phosphoric Acid	20%	EX
Phosphoric Acid	50%	EX
Phosphoric Acid	95%	EX
Phosphorous Chlorides	-	ND
Phosphorous Pentoxide	-	ND
Phthalic Acid	-	ND
Picric Acid	-	ND
Pyridine	-	SE
Salicyl Aldehyde	-	EX
Sea Water	-	EX
Silicic Acid	-	EX
Silicone Fluids	-	ND
Silver Nitrate	-	EX
Sodium Carbonate	-	EX
Sodium Peroxide	-	EX
Sodium Silicate	-	EX
Sodium Sulphide	-	EX
Stannic Chloride	-	SE
Starch	-	EX
Sugar, Syrups & Jams	-	EX
Sulphamic Acid	-	ND
Sulphates (Na, K, Mg, Ca)	-	EX
Sulphites	-	EX
Sulphonic Acids	-	ND
Sulphur	-	EX
Sulphur Dioxide, dry	-	EX
Sulphur Dioxide, wet	-	EX
Sulphur Dioxide	96%	SE
Sulphur Trioxide	-	EX
Sulphuric Acid	<50%	SE
Sulphuric Acid	70%	SE
Sulphuric Acid	95%	SE
Sulphuric Acid, Fuming	-	SE
Sulphur Chlorides	-	ND
Tallow	-	EX
Tannic Acid	10%	ND
Tartaric Acid	-	EX
Trichlorethylene	-	SE
Urea	30%	EX
Vinegar	-	EX
Water, Distilled.	-	EX

CODES
EX = Excellent Resistance
SE = Severe Effect
ND = No Data

Water, Soft	-	EX
Water, Hard	-	EX

© SP Scientific 2017

Chemical	Concentration	Resistance Level 20 °C / 68 °F
Wetting Agents	<5%	EX
Yeast	-	EX
Zinc Chloride	-	SE

CODES
EX = Excellent Resistance
SE = Severe Effect
ND = No Data

BenchTop Pro Front Panel (Kydex)

The following table may be used as a general guide to chemical resistances.

Chemical or Substance	Resistance	Chemical or Substance	Resistance
30% Hydroflouric Acid	No Change	**10% Sodium Chloride**	No Change
63% Pechloric Acid	No Change	**3% Hydrogen Peroxide**	No Change
50% Pechloric Acid	No Change	**95% Ethyl Alcohol**	No Change
10% Hydrochloric Acid	No Change	**50% Ethyl Alcohol**	No Change
30% Sulfuric Acid	No Change	**Acetone**	Attacked
3% Sulfuric Acid	No Change	**Ethyl Acetate**	Attacked
70% Nitric Acid	No Change	**Ethylene Dichloride**	Attacked
50% Nitric Acid	No Change	**Carbon Tetrachloride**	Very Slightly Whitened
30% Nitric Acid	No Change	**Toluene**	Attacked
10% Nitric Acid	No Change	**Heptane**	No Change
10% Citric Acid	No Change	**Tichloroethylene**	Attacked
5% Acetic Acid	No Change	**Lube Oil MIL-0-5606**	No Change
10% Citric Acid	No Change	**Lube Oil MIL-L-7808**	No Change
Oleic Acid	No Change	**Lube Oil MIL-L-23699**	No Change
10% Sodium Hydroxide	No Change	**ASTM Oil No. 3**	No Change
1% Sodium Hydroxide	No Change	**Jet Fuel JP-4**	No Change
10% Ammonium Hydroxide	No Change	**Jet Fuel JP-5**	No Change
2% Sodium Carbonate	No Change	**Water**	No Change
100% Potassium Hydroxide	No Change	**Propylene Glycol**	No Change
Skydrol Hydraulic Fluid	Attacked	**Perchloroethylene**	Attacked
Motor Oil	No Change	**Transmission Fluid**	No Change
Brake Fluid	No Change	**Ammonia**	No Change
Coffee	No Change	**Lestoil**	No Change
Gasoline	No Change	**Isopropyl Alcohol**	No Change
10% Hydrocloric Acid	No Change		

© SP Scientific 2017

The following table may be used as a general guide to chemical and stain resistance to potable liquids, cleaners, polishes, detergents, etc. after 30 days of contact.

Material	Chemical Resistance 23 °C / 73 °F	Staining Tendency 23 °C / 73 °F
Wesson Oil	No Change	None
Mazola Corn Oil	No Change	None
Coppertone Suntan Oil	No Change	None
Skol Suntan Oil	No Change	None
Lestoil	No Change	None
Simoniz Wax	No Change	Very Slight
Household Ammonia	No Change	None
All® Detergent	No Change	None
Exxon Gasoline	No Change	Very Slight
Mennen Skin Bracer	No Change	None
Tomato Juice	No Change	Very Slight
Prune Juice	No Change	Very Slight
Orange Juice Concentrate	No Change	Very Slight
Coffee	No Change	Very Slight
Bright Sail Bluing	No Change	Medium
Johnson's Pride	No Change	None
Isopropyl Alcohol	No Change	None
Cold Cream, Pond's	No Change	None
Butter	No Change	None
Mayonnaise	No Change	None
Mustard	No Change	Slight
Grape Juice	No Change	Slight
Clorox	No Change	None
Rinso Blue	No Change	None
Easy Monday Bluing	No Change	Medium
Pepsi-Cola	No Change	None
Water	No Change	None

© SP Scientific 2017

BenchTop Pro: Miscellaneous Parts

The following table may be used as a general guide to chemical resistances at a resistance level of 20 °C / 68 °F.

Chemical	Drain Gasket (EPDM)	Condenser Gasket (Neoprene)	Overlay Label (Polycarbonate)	Drain Valve (Polypropelene)
Acetaldehyde	R	LR	NR	LR
Acetic Acid (50%)	ND	ND	ND	R
Acetates	ND	ND	ND	R
Acetic Acid (10%)	ND	ND	R	R
Acetic Acid (5%)	ND	ND	R	R
Acetic Acid (80%)	ND	ND	ND	R
Acetic Acid (conc.)	ND	ND	NR	ND
Aceto-Acetic Ester	ND	ND	ND	ND
Acetone	R	LR	NR	R
Acetonitrile	ND	ND	NR	NR
Acetophenone	R	NR	ND	LR
Acetyl Bromide	ND	ND	ND	ND
Acetyl Chloride (dry)	NR	NR	ND	ND
Acetyl Salicylic Acid	ND	ND	ND	ND
Acetylene	R	R	ND	R
Adipic Acid	R	R	R	R
Alcohols	ND	ND	ND	ND
Aliphatic Esters	ND	ND	ND	ND
Alkyl Chlorides	ND	ND	ND	ND
Allyl Alcohol	ND	ND	R	LR
Alum	ND	ND	ND	R
Aluminium Chloride	R	R	R	R
Aluminium Chloride (20%)	ND	ND	ND	R
Aluminium Sulphate	R	R	R	R
Aluminum Fluoride	R	R	ND	R
Aluminum Hydroxide	ND	ND	NR	R
Aluminum Nitrate	R	R	ND	R
Aluminum Oxalate	ND	ND	ND	ND
Aluminum Potassium Sulfate (10%)	ND	ND	ND	R
Aluminum Potassium Sulfate (100%)	ND	ND	ND	R
Amines	ND	ND	ND	ND
Ammonia (10%)	ND	ND	NR	R
Ammonia Nitrate	ND	ND	ND	ND
Ammonia, Anhydrous	R	R	ND	R
Ammonia, Aqueous	ND	ND	ND	R
Ammonium Acetate	ND	ND	R	R

CODES

R = Resistant

LR = Limited Resistant

NR = Not Recommended

ND = No Data

© SP Scientific 2017

Chemical	Drain Gasket (EPDM)	Condenser Gasket (Neoprene)	Overlay Label (Polycarbonate)	Drain Valve (Polypropelene)
Ammonium Bifluoride	ND	ND	ND	R
Ammonium Carbonate	ND	R	NR	R
Ammonium Caseinate	ND	ND	ND	ND
Ammonium Chloride	R	R	LR	R
Ammonium Fluoride (20%)	ND	ND	ND	ND
Ammonium Hydroxide	R	R	LR	R
Ammonium Metaphosphate	ND	ND	ND	R
Ammonium Nitrate	R	R	ND	R
Ammonium Oxalate	ND	ND	R	R
Ammonium Persulfate	R	R	ND	R
Ammonium Phospate	R	R	ND	R
Ammonium Sulfate	R	R	ND	R
Ammonium Sulfide	ND	ND	ND	R
Ammonium Sulfite	ND	ND	ND	ND
Ammonium Thiosulfate	ND	ND	ND	ND
Amyl Acetate	LR	NR	ND	NR
Amyl Alcohol	R	R	ND	R
Amyl Choride	ND	ND	NR	NR
Aniline	R	NR	NR	R
Aniline Hydrocloride	R	NR	ND	NR
Anise Oil	ND	ND	ND	ND
Anitfreeze	ND	ND	ND	R
Antimony Trichloride	ND	ND	ND	R
Aqua Regia	LR	NR	ND	LR
Aromatic solvents	ND	ND	ND	ND
Arsenic	ND	ND	ND	ND
Arsenic Acid	ND	R	ND	R
Ascorbic Acid	ND	ND	ND	ND
Banzaldehyde	ND	ND	ND	NR
Barium Carbonate	ND	ND	ND	R
Barium Chloride	R	R	ND	R
Barium Cyanide	ND	ND	ND	ND
Barium Hydroxide	R	R	ND	R
Barium Nitrate	ND	ND	ND	ND
Barium Sulfate	R	R	ND	LR
Barium Sulfide	R	R	ND	R
Battery Acid	ND	ND	ND	ND
Bay Oil	ND	ND	ND	ND
Benzaldehyde	R	NR	NR	R
Benzene	NR	NR	NR	NR

CODES

R = Resistant

LR = Limited Resistant

NR = Not Recommended

ND = No Data

© SP Scientific 2017

Chemical	Drain Gasket (EPDM)	Condenser Gasket (Neoprene)	Overlay Label (Polycarbonate)	Drain Valve (Polypropelene)
Benzene Sulfonic Acid	LR	R	ND	LR
Benzoic Acid	LR	NR	R	R
Benzonitrile	ND	ND	ND	ND
Benzoyl Peroxide	ND	ND	ND	R
Benzyl Alcohol	R	R	R	NR
Benzyl Choride	NR	NR	ND	R
Bismuth Carbonate	ND	ND	ND	R
Bitumen	ND	ND	ND	ND
Bleach	R	NR	ND	NR
Bone Oil	ND	ND	ND	ND
Borax (Sodium Borate)	R	R	ND	R
Boric Acid (10%)	ND	ND	NR	R
Brines, Saturated	R	R	ND	ND
Bromic Acid (10%)	ND	ND	ND	ND
Bromide (K) Solution	ND	ND	ND	ND
Bromine	ND	R	NR	NR
Butadiene	LR	NR	NR	NR
Butane	NR	R	ND	R
Butanediol	ND	ND	ND	ND
Butanol	ND	ND	ND	ND
Butraldehyde	ND	ND	ND	ND
Butyl Acetate	LR	NR	NR	LR
Butyl Alcohol	R	R	R	R
Butyl Amine	R	NR	ND	NR
Butyl Lactate	ND	ND	ND	ND
Butyl Stereate	LR	NR	ND	ND
Butylene Glycol	ND	ND	R	ND
Butyric Acid	ND	ND	NR	NR
Calcium Bisulfide	ND	ND	ND	R
Calcium Bisulfite	NR	R	ND	R
Calcium Carbonate	ND	ND	ND	R
Calcium Chlorate	ND	ND	ND	R
Calcium Chloride (10%)	ND	ND	R	R
Calcium Disulphide	ND	ND	ND	NR
Calcium Hydroxide	R	R	NR	R
Calcium Hypochorite	R	LR	NR	R
Calcium Nitrate	R	R	ND	R
Calcium Oxide	ND	ND	ND	ND
Calcium Sulfate	ND	ND	ND	R
Carbolic Acid (Phenol)	R	LR	ND	R
Carbon Bisulfide	NR	NR	ND	NR

CODES

R = Resistant

LR = Limited Resistant

NR = Not Recommended

ND = No Data

© SP Scientific 2017

Chemical	Drain Gasket (EPDM)	Condenser Gasket (Neoprene)	Overlay Label (Polycarbonate)	Drain Valve (Polypropelene)
Carbon Dioxide	R	R	ND	R
Carbon Disulphide	ND	ND	NR	NR
Carbon Monoxide	R	R	ND	R
Carbon Tetrachloride	NR	NR	NR	LR
Carbonic Acid	R	R	ND	R
Castor Oil	R	R	ND	R
Caustic Soda & Potash	ND	ND	ND	R
Cellosolve	R	NR	NR	LR
Chlorates of Na, K, Ba	ND	ND	ND	ND
Chloric Acid	ND	ND	ND	NR
Chlorides of Na, K, Ba	ND	ND	ND	ND
Chlorine	ND	ND	R	R
Chloroacetic Acid	ND	NR	NR	R
Chlorobenzene	NR	NR	NR	NR
Chloroethyl Acetate	ND	ND	ND	ND
Chloroform	NR	NR	NR	NR
Chlorophnol	ND	ND	ND	ND
Chlorosulphonic Acid	NR	NR	ND	NR
Chromic Acid (80%)	ND	ND	LR	R
Citric Acid (10%)	ND	ND	R	R
Citric Oils	ND	ND	ND	R
Clophen A 60 (50%)	ND	ND	ND	ND
Cod Liver Oil	R	R	ND	R
Copper Chloride	R	R	ND	R
Copper Cyanide	R	R	ND	R
Copper Fluoride	ND	ND	ND	R
Copper Nitrate	ND	ND	ND	R
Copper Sulphate	R	R	R	R
Corn Oil	LR	LR	ND	ND
Creosote Oil	NR	ND	ND	ND
Cresol	NR	LR	NR	NR
Cresylic Acids (50%)	ND	ND	ND	NR
Cupric Acid	ND	ND	ND	ND
Cyanic Acid	ND	ND	ND	ND
Cycloheaxanol	LR	R	ND	NR
Cyclohexane	NR	LR	R	NR
Cyclohexanone	GR	NR	ND	NR
Cyclohexene	ND	ND	ND	ND
Decahydronaphthalene	ND	ND	R	ND
Detergents, Synthetic	R	R	ND	R
Dextrin	ND	ND	ND	R

CODES

R = Resistant

LR = Limited Resistant

NR = Not Recommended

ND = No Data

© SP Scientific 2017

Chemical	Drain Gasket (EPDM)	Condenser Gasket (Neoprene)	Overlay Label (Polycarbonate)	Drain Valve (Polypropelene)
Dextrose	ND	ND	ND	R
Diacetone Alcohol	ND	R	ND	NR
Diamyl Phthalate	ND	NR	ND	ND
Dibutyl Sebecate	R	NR	ND	ND
Dibutylphtalate	R	ND	ND	R
Dichlorobenzene	ND	ND	ND	NR
Diesel	ND	ND	ND	LR
Diethyl Ether	NR	LR	NR	NR
Diethylamine	R	R	ND	LR
Diethylene Glycol	ND	R	R	R
Diglycolic Acid	ND	ND	ND	R
Dimethyl Aniline	R	LR	ND	ND
Dimethylamine	ND	ND	ND	R
Dimethylformamide	R	LR	NR	R
Dioctyl Sebacate	R	NR	ND	ND
Dioctylphthalate	R	NR	ND	NR
Dioxane	R	NR	NR	R
Diphenyl	ND	ND	ND	NR
Diphenyl Oxide	NR	NR	ND	ND
Disodium Phospate	ND	ND	ND	ND
Edible Oil, Edible Fat	ND	ND	R	ND
Emulsifiers, Concentrated	ND	ND	ND	ND
Esters	ND	ND	ND	ND
Ethane	NR	R	ND	NR
Ethanol (96%)	ND	ND	ND	ND
Ether	ND	ND	NR	NR
Ethyl Acetate	R	LR	NR	R
Ethyl Alcohol	R	R	R	R
Ethyl Alcohol (<15%)	ND	ND	ND	ND
Ethyl Alcohol (>30%)	ND	ND	ND	ND
Ethyl Alcohol (15-30%)	ND	ND	ND	ND
Ethyl Bromide	ND	ND	ND	ND
Ethyl Butyrate	ND	ND	NR	LR
Ethyl Choride	LR	NR	NR	NR
Ethyl Ether	LR	LR	NR	NR
Ethyl Sulfate	ND	ND	ND	ND
Ethylene Chloride	LR	NR	NR	NR
Ethylene Chlorohydrin	R	R	ND	NR
Ethylene Diamine	R	R	ND	R
Ethylene Dibromide	ND	ND	ND	LR
Ethylene Dichloride	LR	NR	ND	NR

CODES

R = Resistant

LR = Limited Resistant

NR = Not Recommended

ND = No Data

© SP Scientific 2017

Chemical	Drain Gasket (EPDM)	Condenser Gasket (Neoprene)	Overlay Label (Polycarbonate)	Drain Valve (Polypropelene)
Ethylene Glycol	R	R	LR	R
Ethylene Oxide	LR	NR	NR	LR
Ethylene Sulfate	ND	ND	ND	ND
Ferric Chloride	R	R	ND	R
Ferric Nitrate	R	R	ND	R
Ferric Sulfate	R	R	ND	R
Ferrous Chloride	ND	ND	ND	R
Ferrous Sulphate	ND	ND	ND	R
Fluoboric Acid	R	R	ND	R
Fluorinated Refrigerants	ND	ND	ND	ND
Fluorine	NR	NR	R	NR
Fluorosilic Acid	ND	ND	ND	R
Formaldehyde (40%)	ND	ND	R	R
Formamide	ND	ND	ND	ND
Formic Acid (1-%)	ND	ND	R	R
Formic Acid (40-%)	ND	ND	ND	R
Freon	NR	LR	R	R
Frigen, Freon	ND	ND	NR	ND
Fruit Juices	ND	ND	R	R
Fuel Oil	NR	R	R	R
Gallic Acid	R	R	ND	R
Gasoline	NR	LR	NR	NR
Gelatine	R	R	ND	R
Ginger Oil	ND	ND	ND	ND
Glucose	R	R	ND	R
Glycerine	R	R	R	R
Glycerol	ND	ND	ND	ND
Glycol	R	R	R	R
Glysantin (40%)	ND	ND	R	ND
Grease	ND	ND	ND	ND
Heptane	ND	ND	LR	LR
Hexamethylene Diamine	ND	ND	ND	ND
Hexamine	ND	ND	ND	ND
Hexane	NR	R	R	LR
Hexyl Alcohol	LR	R	ND	ND
Hydraulic Oil	NR	R	ND	NR
Hydrazine	R	R	ND	NR
Hydrobromic Acid (50%)	ND	ND	ND	R
Hydrochloric Acid (10%)	ND	ND	ND	LR
Hydrochloric Acid (conc.)	ND	ND	ND	R

CODES

R = Resistant

LR = Limited Resistant

NR = Not Recommended

ND = No Data

© SP Scientific 2017

Chemical	Drain Gasket (EPDM)	Condenser Gasket (Neoprene)	Overlay Label (Polycarbonate)	Drain Valve (Polypropelene)
Hydrochloric Acid (2%)	ND	ND	R	ND
Hydrochloric Acid (36%)	ND	ND	R	ND
Hydrocyanic Acid	ND	R	ND	R
Hydrofluoric Acid (75%)	ND	ND	ND	R
Hydrofluoric Acid (30%)	ND	ND	LR	R
Hydrogen Bromide (10%)	ND	ND	ND	ND
Hydrogen Peroxide (>40%)	ND	ND	ND	R
Hydrogen Peroxide (0.5%)	ND	ND	R	R
Hydrogen Peroxide (30%)	ND	ND	R	R
Hydrogen Phospide	ND	ND	ND	ND
Hydrogen Sulphide	ND	ND	R	R
Hydroquinone	R	NR	ND	R
Hypochlorites	ND	ND	ND	ND
Ink	ND	ND	R	ND
Iodine	ND	ND	ND	R
Isobutyl Alcohol	R	R	ND	R
Iso-Butyl-Acetate	ND	ND	ND	ND
Isooctane	NR	R	ND	R
Isopropanol	ND	ND	LR	ND
Isopropyl Acetate	R	NR	ND	LR
Isopropyl Alcohol	R	R	ND	R
Isopropyl Ether	NR	LR	ND	NR
Jet Fuel	ND	ND	ND	NR
Kerosene	NR	R	R	NR
Ketones	ND	ND	ND	NR
Lacquers	NR	NR	ND	NR
Lactic Acid (10%)	ND	ND	R	R
Lactic Acid (90%)	ND	ND	R	R
Lead Acetate	R	R	ND	R
Lead Perchlorate	ND	ND	ND	ND
Lead Sulfamate	R	R	ND	R
Lemon Oil	ND	ND	ND	NR
Ligroin	ND	ND	ND	NR
Lime (CaO)	ND	ND	ND	R
Linoleic Acid	NR	NR	ND	LR
Linseed Oil	LR	R	R	R
Lubricants	NR	ND	R	LR
Lugal Solution	ND	ND	ND	ND
Magnesium Carbonate	ND	ND	ND	R
Magnesium Chloride	R	R	R	R

CODES

R = Resistant

LR = Limited Resistant

NR = Not Recommended

ND = No Data

© SP Scientific 2017

Chemical	Drain Gasket (EPDM)	Condenser Gasket (Neoprene)	Overlay Label (Polycarbonate)	Drain Valve (Polypropelene)
Magnesium Hydroxide	R	R	ND	R
Magnesium Nitrate	ND	ND	ND	R
Magnesium Oxide	ND	ND	ND	ND
Magnesium Sulfate	R	R	ND	R
Maleic Acid	R	LR	ND	R
Maleic Anhydride	R	LR	ND	ND
Malic Acid	R	LR	ND	R
Manganate, Potassium (K)	ND	ND	ND	ND
Manganese Sulphate	ND	ND	ND	LR
Melamine	ND	ND	ND	ND
Mercuric Chloride	R	R	ND	R
Mercuric Cyanide	ND	ND	ND	R
Mercuric Nitrate	ND	ND	ND	R
Mercury	R	R	ND	LR
Methane	NR	R	ND	R
Methanol	ND	ND	NR	R
Methyl Acetate	R	R	ND	R
Methyl Acetone	ND	ND	ND	ND
Methyl Acrylate	R	R	ND	ND
Methyl Alcohol	R	R	R	R
Methyl Benzoate	ND	ND	ND	ND
Methyl Bromide	NR	NR	ND	LR
Methyl Butyl Ketone	ND	ND	ND	ND
Methyl Cellosolve	R	LR	ND	LR
Methyl Chloride	LR	NR	NR	NR
Methyl Cyclohexanol	ND	ND	ND	ND
Methyl Dichloride	ND	ND	ND	ND
Methyl Ethyl Ketone	R	LR	NR	NR
Methyl Methacrylate	LR	NR	ND	ND
Methyl Naphthalene	ND	ND	ND	ND
Methyl Salicylate	R	NR	ND	R
Methylamine	ND	ND	ND	ND
Methylene Chloride	LR	NR	NR	LR
Methylene DiChloride	ND	ND	ND	ND
Methylsulfuric Acid	ND	ND	ND	ND
Milk	ND	ND	R	R
Mineral Oil	LR	R	LR	LR
Mineral Spirits	ND	ND	ND	ND
Molasses	ND	ND	ND	R
Monobromonaphthalene	ND	ND	ND	ND

CODES

R = Resistant

LR = Limited Resistant

NR = Not Recommended

ND = No Data

© SP Scientific 2017

Chemical	Drain Gasket (EPDM)	Condenser Gasket (Neoprene)	Overlay Label (Polycarbonate)	Drain Valve (Polypropelene)
Monochloroacetic Acid	ND	ND	ND	R
Monoethanolamine	R	NR	ND	R
Monoethanolamine	ND	ND	ND	ND
Motor Oil/Engine Oil	ND	ND	ND	NR
Naptha	NR	LR	ND	NR
Napthalene	NR	NR	ND	LR
Nickel Chloride	R	R	ND	R
Nickel Nitrate	ND	ND	ND	R
Nickel Salts	ND	ND	ND	ND
Nickel Sulfate	R	R	R	R
Nitrates of Na, K and NH3	ND	ND	ND	ND
Nitric Acid (<25%)	ND	ND	R	R
Nitric Acid (50%)	ND	ND	R	NR
Nitric Acid (90%)	ND	ND	LR	NR
Nitric Acid (2%)	ND	ND	R	R
Nitric Oxide	ND	ND	ND	ND
Nitrite (Na)	ND	ND	R	ND
Nitrobenzene	R	NR	NR	NR
Nitrocellulose	ND	ND	ND	ND
Nitromethane	R	R	ND	ND
Nitrous Acid	ND	ND	ND	ND
Octyl Alcohol	ND	R	ND	ND
Oils Lubricating	ND	ND	ND	ND
Oleic Acid	NR	LR	LR	LR
Oleum (100%)	ND	ND	ND	NR
Oleum (25%)	ND	ND	ND	NR
Olive Oil	R	R	ND	R
Oxalic Acid (10%)	ND	ND	R	R
Ozone	R	LR	NR	NR
P3-Solution, Aqueous	ND	ND	NR	ND
Paint Thinner	NR	NR	ND	ND
Palmitic Acid	R	R	ND	LR
Paraffin Oil	ND	ND	R	R
Peanut Oil	LR	LR	ND	NR
Pentane	ND	ND	ND	ND
Perchlorethylene	NR	NR	LR	NR
Perchloric Acid	R	R	NR	NR
Petrolatum	ND	ND	ND	ND
Petroleum	ND	R	LR	LR
Phosphorous Chlorides	ND	ND	ND	ND

CODES

R = Resistant

LR = Limited Resistant

NR = Not Recommended

ND = No Data

© SP Scientific 2017

Chemical	Drain Gasket (EPDM)	Condenser Gasket (Neoprene)	Overlay Label (Polycarbonate)	Drain Valve (Polypropelene)
Petroleum White Spirit	ND	ND	NR	ND
Phenol, Aqueous	R	LR	NR	R
Phosphoric Acid (10%)	ND	ND	R	LR
Phosphoric Acid (20%)	R	R	R	R
Phosphoric Acid (20%)	ND	ND	R	R
Phosphoric Acid (95%)	ND	ND	R	R
Phosphorous Pentoxide	ND	ND	ND	ND
Phthalates	ND	ND	ND	ND
Phthalic Acid	ND	ND	ND	LR
Phthalic Anhydride	ND	ND	ND	ND
Picric Acid	R	R	ND	ND
Pine Oil	NR	NR	ND	ND
Potash (Potassium Carbonate)	ND	ND	ND	R
Potassium Bicarbonate	ND	ND	ND	R
Potassium Bromide	ND	ND	ND	R
Potassium Carbonate	ND	ND	ND	R
Potassium Chlorate	ND	ND	ND	R
Potassium Chloride	R	R	R	R
Potassium Chromate	ND	ND	ND	R
Potassium Cyanide Solutions	R	R	ND	R
Potassium Dichromate (10%)	ND	ND	R	R
Potassium Ferricyanide	ND	ND	ND	R
Potassium Fluoride	ND	ND	ND	ND
Potassium Hydroxide Solution (10%)	ND	ND	NR	R
Potassium Hydroxide Solution (50%)	ND	ND	NR	R
Potassium Nitrate	R	R	ND	R
Potassium Oxalate	ND	ND	ND	ND
Potassium Perborate	ND	ND	ND	ND
Potassium Perchlorate (10%)	ND	ND	ND	ND
Potassium Permanganate (1%)	ND	ND	R	R
Potassium Persulfate	ND	ND	ND	R
Potassium Sulfate	R	R	ND	R
Potassium Sulfite	ND	ND	ND	R
Propane	NR	R	LR	LR
Propanol	ND	ND	R	ND
Propargyl Alcohol	ND	ND	ND	ND
Propyl Alcohol	R	R	ND	R
Propylene Glycol	ND	ND	LR	R
Pyridene	R	ND	NR	R
Pyridine	ND	NR	ND	R

CODES

R = Resistant

LR = Limited Resistant

NR = Not Recommended

ND = No Data

© SP Scientific 2017

Chemical	Drain Gasket (EPDM)	Condenser Gasket (Neoprene)	Overlay Label (Polycarbonate)	Drain Valve (Polypropelene)
Pyrogallic Acid	ND	ND	ND	R
Rosins	ND	ND	ND	R
Salicylic Acid	R	R	ND	R
Sea Water	R	R	ND	R
Selenic Acid	ND	ND	ND	ND
Shellac	ND	ND	ND	R
Silicic Acid	ND	ND	ND	ND
Silicone	ND	ND	ND	R
Silicone Oil	ND	ND	R	R
Silver Bromide	ND	ND	ND	ND
Silver Nitrate	R	R	R	R
Soap Solution	R	R	R	R
Soda Solution (10%)	ND	ND	R	ND
Sodium Acetate	R	R	ND	R
Sodium Aluminate	ND	ND	ND	ND
Sodium Benzoate	ND	ND	ND	R
Sodium Biocarbonate	ND	ND	R	R
Sodium Bisulfate	ND	ND	ND	R
Sodium Bisulphite	R	R	R	R
Sodium Borate	R	R	ND	R
Sodium Bromide	ND	ND	ND	R
Sodium Carbonate (10%)	ND	ND	R	R
Sodium Chlorate	ND	ND	ND	R
Sodium Chloride (10%)	ND	ND	R	R
Sodium Chromate	ND	ND	ND	R
Sodium Cyanide	R	R	ND	R
Sodium Dichromate	ND	ND	ND	R
Sodium Ferrocyanide	ND	ND	ND	R
Sodium Fluoride	ND	ND	ND	R
Sodium Hydroxide Solution (5%)	ND	ND	NR	R
Sodium Hydroxide Solution (50%)	ND	ND	NR	R
Sodium Hydroxide Solution (80%)	ND	ND	ND	R
Sodium Hypochlorite (<20%)	ND	ND	R	R
Sodium Hypochlorite (100%)	R	NR	ND	R
Sodum Acetate	ND	ND	ND	ND
Sodium Metaphosphate	R	R	ND	NR
Sodium Metasilicate	ND	ND	ND	ND
Sodium Nitrate (10%)	ND	ND	ND	R
Sodium Perborate	R	R	ND	R
Sodium Peroxide	R	R	ND	LR

CODES

R = Resistant

LR = Limited Resistant

NR = Not Recommended

ND = No Data

© SP Scientific 2017

Chemical	Drain Gasket (EPDM)	Condenser Gasket (Neoprene)	Overlay Label (Polycarbonate)	Drain Valve (Polypropelene)
Sodium Phospate	R	R	ND	R
Sodium Polyphosphate	ND	ND	ND	ND
Sodium Silicate	R	R	ND	R
Sodium Sulfate	R	R	ND	R
Sodium Sulphide	ND	ND	ND	R
Sodium Tetraborate	ND	ND	ND	R
Sodium Thiosulphate	R	R	ND	R
Sorghum	ND	ND	ND	ND
Soybean Oil	LR	R	ND	R
Stannic Chloride	R	R	ND	R
Stannic Fluoborate	ND	ND	ND	ND
Starch	ND	ND	ND	R
Steanic Acid	ND	ND	ND	ND
Stearic Acid	R	R	ND	R
Stoddard Solvent	NR	R	ND	NR
Styrene	NR	NR	NR	ND
Sulphamic Acid	ND	ND	ND	ND
Sulphates (Na, K, Mg, Ca)	ND	ND	ND	ND
Sulphites	ND	ND	ND	ND
Sulphonic Acids	ND	ND	ND	ND
Sulphut	ND	ND	ND	ND
Sulphuric Acid (98%)	ND	ND	NR	R
Sulphuric Acid (2%)	ND	ND	R	R
Sulphur Dioxide (96%)	ND	ND	ND	ND
Sulphur Dioxide, dry	R	NR	ND	R
Sulphur Chlorides	NR	LR	ND	NR
Sulphur Dioxide, wet	R	R	ND	NR
Sulphur Trioxide	R	NR	ND	NR
Tallow	ND	ND	ND	ND
Tannic Acid (10%)	ND	ND	ND	R
Tanning Oil	ND	ND	ND	ND
Tantaric Acid	ND	ND	ND	R
Tar	ND	ND	ND	ND
Tartaric Acid	R	R	R	R
Tetrachloroethane	ND	ND	ND	R
Tetrachloroethylene	NR	NR	ND	NR
Tetrahydrofuran	LR	NR	NR	NR
Tetrahydronaphthalene	ND	ND	NR	NR
Thionyl Chloride	LR	NR	NR	NR
Tincture of Iodine (alc.)	ND	ND	LR	ND

CODES

R = Resistant

LR = Limited Resistant

NR = Not Recommended

ND = No Data

© SP Scientific 2017

Chemical	Drain Gasket (EPDM)	Condenser Gasket (Neoprene)	Overlay Label (Polycarbonate)	Drain Valve (Polypropelene)
Toluene	NR	NR	NR	NR
Tomato Juice	ND	ND	ND	R
Trichloroethane	NR	NR	ND	NR
Trichloroethylene	NR	NR	NR	NR
Trichloropropane	ND	ND	ND	ND
Tricresylphosphate	NR	LR	ND	LR
Trichloroacetic Acid	ND	ND	LR	LR
Triethanolamine	R	R	NR	NR
Triethylamine	ND	ND	ND	NR
Trilon B (10%)	ND	ND	ND	ND
Trisodium Phosphate	ND	ND	ND	R
Turbine Oil	NR	NR	ND	R
Turpentine	NR	NR	NR	NR
Urea Aqueous	ND	ND	R	R
Urine	ND	ND	ND	R
Varnish	NR	NR	ND	R
Vaseline	ND	ND	R	ND
Vegetable Oil	LR	LR	ND	R
Vinegar	ND	R	ND	R
Wax, Molten	ND	ND	R	ND
Whey	ND	ND	ND	ND
Wine, Brandy	ND	ND	R	ND
Xylene	NR	NR	NR	NR
Yeast	ND	ND	ND	ND
Zinc Chloride (10%)	ND	ND	LR	R
Zinc Hydrosulfite	ND	ND	ND	ND
Zinc Sulfate	R	R	ND	R

CODES
R = Resistant
LR = Limited Resistant
NR = Not Recommended
ND = No Data

© SP Scientific 2017

BenchTop Pro Top

The following table may be used as a general guide to HDPE chemical resistances.

Chemical	Concentration	Resistance Level 20 °C / 68 °F
Acetaldehyde	-	R
Acetic Acid	10%	R
Acetic Acid	glac./anh.	R
Acetic Anhydride	-	R
Acetone	-	R
Other Ketones	-	R
Acetonitrile	-	R
Acetylene	-	R
Acid Fumes	-	R
Alcohols	-	R
Aliphatic Esters	-	R
Alkyl Chlorides	-	R
Alum	-	R
Aluminium Chloride	-	R
Aluminium Sulphate	-	R
Ammonia, Anhydrous	-	R
Ammonia, Aqueous	-	R
Ammonium Chloride	-	R
Amyl Acetate	-	R
Aniline	-	R
Aromatic Solvents	-	R
Ascorbic Acid	-	R
Beer	-	R
Benzaldehyde	-	R
Benzoic Acid	-	R
Boric Acid	-	R
Brines, Saturated	-	R
Bromide (K) Solution	-	R
Butyl Acetate	-	R
Calcium Chloride	-	R
Carbon Disulphide	-	R
Carbonic Acid	-	R
Carbon Tetrachloride	-	NR
Caustic Soda & Potash	-	R
Cellulose Paint	-	R
Chlorates of Na, K, Ba	-	R
Chlorine, dry	-	LR
Chlorine, wet	-	LR

CODES
R = Resistant
LR = Limited Resistant
NR = Not Recommended
ND = No Data

© SP Scientific 2017

Chemical	Concentration	Resistance Level 20 °C / 68 °F
Chlorides of Na, K, Ba	-	R
Chloroacetic Acid	-	R
Chlorobenzene	-	NR
Chloroform	-	NR
Chlorosulphonic Acid	-	NR
Chromic Acid	80%	R
Citric Acid	-	R
Copper Salts	most	R
CresylicAcids	50%	R
Cyclohexane	-	NR
Detergents, Synthetic	-	R
Emulsifiers, Concentrated	-	R
Esters	-	ND
Ether	-	R
Fatty Acids	>C6	R
Ferric Chloride	-	R
Ferrous Sulphate	-	R
Fluorinated Refrigerants	-	R
Fluorine, dry	-	NR
Flourine, wet	-	NR
Fluorosilic Acid	-	R
Formaldehyde	40%	R
Formic Acid	-	R
Fruit Juices	-	R
Gelatine	-	R
Glycerine	-	R
Glycols	-	R
Glycol, Ethylene	-	R
Glycolic Acid	-	R
Hexamethylene Diamine	-	R
Hexamine	-	R
Hydrazine	-	R
Hydrobromic Acid	50%	R
Hydrochloric Acid	10%	R
Hydrochloric Acid	conc.	R
Hydrocyanic Acid	-	R
Hydrofluoric Acid	40%	R
Hydrofluoric Acid	75%	R
Hydrogen Peroxide	30%	R
Hydrogen Peroxide	30 - 90%	R
Hydrogen Sulphide	-	R
Hypochlorites	-	R

CODES

R = Resistant

LR = Limited Resistant

NR = Not Recommended

ND = No Data

© SP Scientific 2017

Chemical	Concentration	Resistance Level 20 °C / 68 °F
Hypochlorites	Na 12-14%	R
Iso-Butyl-Acetate	-	ND
Lactic Acid	90%	R
Lead Acetate	-	R
Lead Perchlorate	-	ND
Lime (CaO)	-	R
Maleic Acid	-	R
Manganate, Potassium (K)	-	R
Meat juices	-	R
Mercuric Chloride	-	R
Mercury	-	R
Methanol	-	R
Methylene Chloride	-	LR
Milk Products	-	R
Moist Air	-	R
Molasses	-	R
Monoethanolamine	-	ND
Naptha	-	NR
Napthalene	-	R
Nickel salts	-	R
Nitrates of Na, K and NH3	-	R
Nitric Acid	<25%	R
Nitric Acid	50%	R
Nitric Acid	90%	NR
Nitric Acid (fuming)	-	NR
Nitrite	Na	R
Nitrobenzene	-	NR
Oils, Diesel	-	R
Oils, Essential	-	R
Oils, Lubricating + Aromatic Additives	-	R
Oils, Mineral	-	R
Oils, Vegetable and Animal	-	R
Oxalic Acid	-	R
Ozone	-	R
Paraffin Wax	-	R
Perchloric Acid	-	R
Petroleum Spirits	-	R
Phenol	-	R
Phosphoric Acid	20%	R
Phosphoric Acid	50%	R
Phosphoric Acid	95%	R
Phosphorous Chlorides	-	NR

CODES

R = Resistant

LR = Limited Resistant

NR = Not Recommended

ND = No Data

© SP Scientific 2017

Chemical	Concentration	Resistance Level 20 °C / 68 °F
Phosphorous Pentoxide	-	R
Phthalic Acid	-	R
Picric Acid	-	R
Pyridine	-	R
Salicyl Aldehyde	-	R
Sea Water	-	R
Silicic Acid	-	R
Silicone Fluids	-	R
Silver Nitrate	-	R
Sodium Carbonate	-	R
Sodium Peroxide	-	R
Sodium Silicate	-	R
Sodium Sulphide	-	R
Stannic Chloride	-	R
Starch	-	R
Sugar, Syrups & Jams	-	R
Sulphamic acid	-	ND
Sulphates (Na, K, Mg, Ca)	-	R
Sulphites	-	R
Sulphonic Acids	-	ND
Sulphur	-	R
Sulphur Dioxide, dry	-	R
Sulphur Dioxide, wet	-	R
Sulphur Dioxide	96%	R
Sulphur Trioxide	-	NR
Sulphuric Acid	<50%	R
Sulphuric Acid	70%	R
Sulphuric Acid	95%	R
Sulphuric Acid, Fuming	-	R
Sulphur Chlorides	-	ND
Tallow	-	R
Tannic Acid	10%	R
Tartaric Acid	-	R
Trichlorethylene	-	R
Urea	30%	R
Vinegar	-	R
Water, Distilled.	-	R
Water, Soft	-	R
Water, Hard	-	R
Wetting Agents	<5%	R
Yeast	-	R
Zinc Chloride	-	R

CODES

R = Resistant

LR = Limited Resistant

NR = Not Recommended

ND = No Data

© SP Scientific 2017

Protective Cover for Omnitronics™ Controller

The following table may be used as a general guide to chemical resistances.

Chemical	Chemical	Chemical	Chemical
Acetone	40% NaOH	Top Job1	Ketchup
MEK	Concentrated HCl	Fantastik2	Tea
Toluene	Gasoline (Regular)	Formula 4093	Tomato Juice
Methylene Chloride	Gasoline (Unleaded)	Windex w/Ammonia D4	Lemon Juice
Isopropyl Alcohol	Butyl Cellosolve	Wisk5	Grape Juice
Cyclohexanone	Mustard	Downy1	Vinegar
Ethyl Acetate	Coffee	Spray 'N Wash2	Milk
Xylene	Mr. Clean1	Clorox3	Vinegar

© SP Scientific 2017

Appendix E: Refrigerant Information

THE REFRIGERANTS AND INSULATING FOAM USED IN THE MANUFACTURE OF THIS EQUIPMENT CONTAIN FLUORINATED GREENHOUSE GASES.

EU F-Gas Regulation (517/2014)

SP Scientific freeze dryers, low temperature chillers, glycol coolers and low temperature vapor condensers utilize several hydrofluorocarbon (HFC) refrigerants and foam blowing agents. The import and use of these HFC refrigerants within the European Union (EU) are regulated by the EU F-Gas Regulation (517/2014). As a result, all SP Scientific products containing HFCs shall be labelled and instruction manuals shall include the information placed on the label.

F-Gas labels shall include:

The type of HFC refrigerants used.

The quantity of HFC refrigerants expressed in weight (Kg),

The GWP (global warming potential) of HFC refrigerants.

The total CO_2 equivalent (CO_2e) of HFC refrigerants contained in the equipment.

A reference that the refrigerants and insulating foam contain fluorinated greenhouse gases.

The following F-Gas information is provided for (MODEL) equipment. This information shall also be included on the F-Gas label attached to equipment after 1 January 2017.

Equipment Model	Gas #1			Gas #2			Gas #3			Total CO_2e (tonnes)
	F-Gas	Charge (Kg)	GWP	F-Gas	Charge (Kg)	GWP	F-Gas	Charge (Kg)	GWP	
BenchTop Pro, 3L ES	MO89	0.370	3805	N/Ap	N/Ap	N/Ap	N/Ap	N/Ap	N/Ap	1.408
BenchTop Pro, 9L ES	MO89	0.370	3805	N/Ap	N/Ap	N/Ap	N/Ap	N/Ap	N/Ap	1.408
BenchTop Pro, 3L XL	R245fa	0.255	1030	R508B	0.28	13396	N/Ap	N/Ap	N/Ap	4.013
BenchTop Pro, 8L ZL	MO89	0.340	3805	R1150	0.025	4	N/Ap	N/Ap	N/Ap	1.292
BenchTop Pro, 8L XL	R245fa	0.255	1030	R508B	0.28	13396	N/Ap	N/Ap	N/Ap	4.013
BenchTop Pro, 9L EL	R407C	0.370	1774	R508B	0.2	13396	N/Ap	N/Ap	N/Ap	3.336

© SP Scientific 2017

General EU Compliance Guidelines

Leak Prevention & Checking

Any equipment with less than 5 tonnes CO_2e (non-hermetic) or 10 tonnes CO_2e (in hermetically sealed systems[12]) is exempt from leak checking under the EU F-Gas regulation as of 01 January 2017. Owners and end-users of SP Scientific products with CO_2 weight limits above the aforementioned may be subject to the automatic leak detection requirement.

Record Keeping / F-Gas Registry

Many SP Scientific products are below the CO_2 weight limit threshold for meeting the record keeping requirement, however, some SP Scientific products are above the size threshold specified. In such cases, owners and end users must understand and comply with the record keeping requirements of the EU F-Gas regulation.

Note: *All importers of equipment pre-charged with HFCs must have a registry account.*

Recovery

Equipment owners and users must understand and meet mandatory obligations regarding the recovery of HFC refrigerants and foam blowing agents at end-of-life from equipment of all sizes. SP Scientific shall not assume responsibility for the disposal and/or recovery of HFC refrigerants and foam blowing agents.

Service, Training and Certification

All servicing that involves breaking into the refrigeration circuit must be performed by technicians holding relevant training certificates. This applies to equipment of all sizes.

Control of Use / Service Ban

The 2014 EU F-Gas Regulation includes a “service ban” that bans the use of HFCs with a GWP above 2500 for the maintenance of existing refrigeration equipment with virgin refrigerant after January 2020.
The ban includes:

A size threshold of 40 tonnes CO_2e.

An exemption for equipment that cools products to below -50 ºC.

An exemption for the use of reclaimed refrigerant until 2030.

Note: *Many SP Scientific products are below size threshold specified or operate with products below -50 ºC. For these products, the service ban has no impact. However, for medium- and large-sized systems that use a refrigerant with a GWP above 2500, and do not operate below -50 ºC, the service ban requires compliance which shall be the responsibility of the equipment owner and/or end user.*

[12] “Hermetically sealed equipment” means equipment in which all fluorinated greenhouse gas containing parts are made tight by welding, brazing or a similar permanent connection, which may include capped valves or capped service ports that allow proper repair or disposal, and which have a tested leakage rate of less than 3 grams per year under a pressure of at least a quarter of the maximum allowable pressure.

© SP Scientific 2017

SP Scientific

3538 Main Street
Stone Ridge, NY 12484 USA

(800) 251-1531
(845) 687-0071

935 Mearns Road
Warminster, PA 18974 USA

(800) 523-2327
(215) 672-7800

815 State Route 208
Gardiner, NY 12525 USA

(800) 431-8232
(845) 255-5000

www.SPScientific.com