EP.V.13001 · 07/2017

asecos®

C LINE | E LINE | SL LINE | G LINE

# BEDIENUNGSANLEITUNG
Sicherheitsschränke

# USER MANUAL
Safety storage cabinets

# GEBRUIKSAANWIJZING
Veiligheidskasten

# NOTICE D'UTILISATION
Amoires de sécurite d'aprés

# MANUAL DE INSTRUCCIONES
Armarios de seguridad

# ISTRUZIONI PER L'USO
Armadi di sicurezza

# INSTRUÇÕES DE SERVIÇO
Armários de segurança

5 Jahre Garantie* 5 years warranty* | SL LINE

**5 JAHRE GARANTIE***
* Bei Abschluss eines **BASICPlus-Vertrages**, mit fester 5-jähriger Laufzeit, genießen Sie 5 Jahre Garantie für Ihren Sicherheitsschrank.

***5 YEARS WARRANTY****
**Upon conclusion of an asecos service and maintenance agreement **(BasicPlus tariff)** with a fixed term of 5 years, you will get a warranty extension for a maximum of 5 years for your safety storage cabinet.*

Weitere Informationen zu unseren Garantieleistungen finden Sie unter
**www.asecos.com/service-leistungen**

*For detailed information about our warranties please visit*
***www.asecos.com/service-conditions***

## SL LINE

**SL-CLASSIC**
- SL.196.120.MV
- SL.196.120.MV.WDC
- SL.196.060.MH
- SL.196.060.MH.WDC
- SL.196.060.MH.R

**SL-CLASSIC-UB**
- SL.060.140.UB
- SL.060.110.UB
- SL.060.059.UB
- SL.060.059.UB.R
- SL.080.059.UB.TCR
- SL.080.110.UB.2TC

## G LINE

**G-OD**
- GOD.215.135
- GOD.215.100
- GOD.215.070.R
- GOD.215.135.WDFW
- GOD.215.100.WDFW
- GOD.215.070.WDFWR
- GOD.215.135.WDHW
- GOD.215.100.WDHW
- GOD.215.070.WDHWR

## E LINE

**E-CLASSIC**
- E.195.095
- E.195.095.2
- E.140.095
- E.140.095.2

**E-CLASSIC-UF**
- E.195.095.F
- E.195.095.F2

**E-CLASSIC-MF**
- EM.195.095.F2

**E-PSM**
- EP.195.095
- EP.195.095.2

**E-PSM-UF**
- EP.195.095.F
- EP.195.095.F2

## C LINE

**C-CLASSIC**
- C.195.120
- C.195.060
- C.195.060.R

**C-CLASSIC-UB**
- C.060.110.UB

**CF-CLASSIC**
- CF.195.120
- CF.195.095
- CF.195.095.F
- CF.195.060
- CF.140.120
- CF.140.095
- CF.140.060.

**CS-CLASSIC**
- CS.195.105
- CS.195.081
- CS.195.054
- CS.195.054.R
- CS.110.105
- CS.110.081
- CS.110.054
- CS.110.054.R
- CS.195.105.MM.4WD
- CS.195.054.MH.3WD

**CS-CLASSIC-G**
- CS.195.105.WDFW
- CS.195.081.WDFW
- CS.195.054.WDFW
- CS.195.054.WDFWR
- CS.110.105.WDFW
- CS.110.081.WDFW
- CS.110.054.WDFW
- CS.110.054.WDFWR

**CS-CLASSIC-F**
- CS.195.105.F

**CS-CLASSIC-GF**
- CS.195.105.F.WDFW

**CS-PHOENIX**
- CS.195.105.FD
- CS.110.105.FD

**asecos GmbH**
Abt. Kundendienst
Weiherfeldsiedlung 16–18
**D-63584 Gründau**
Fax: +49 60 51 – 92 20-10

Sehr geehrte Kundin, sehr geehrter Kunde,

mit dem Kauf Ihres asecos-Sicherheitsschrankes haben Sie eine entscheidende Investition für die Sicherheit in Ihrem Haus getätigt. Vor Ihnen steht ein innovatives Produkt aus hochwertigen Materialien, das höchste Qualität garantiert.

Sicherheitsschränke aus dem Hause asecos verfügen über eine lückenlose Zulassungs-Dokumentation. Wir archivieren Ihre Zulassungsdokumente jedes einzelnen Schrankes für Sie, bis Sie diese im Bedarfsfall (z. B. einer Betriebsbegehung o. ä.) mit diesem Formular von uns anfordern.

Dazu einfach dieses Formular heraustrennen/kopieren und mit Ihrer Adresse und der Seriennummer des Schrankes versehen per Fax zurück an uns.

Mit freundlichen Grüßen

asecos GmbH

Dear Customer,

you have made a decisive investment in safety for your company by purchasing this asecos safety storage cabinet. You now own an innovative product made of top-quality materials guaranteeing the highest quality standards.

asecos safety storage cabinets have complete authorisation documents. We archive the authorisation documents for every individual cabinet, keeping them ready for you should you ever need them (e.g. for a works inspection or similar). Simply request them using this form.

Tear off or copy that page and return to us by fax with your address and serial number of the cabinet on it.

Yours sincerely

asecos GmbH

| | |
|---|---|
| **Firma** ▪ company | |
| **Abteilung** ▪ department | |
| **Name** ▪ name | |
| **Straße** ▪ street | |
| **PLZ** ▪ postal code | |
| **Ort** ▪ city | |
| **Schrank** ▪ cabinet<br>**Seriennummer(n)** ▪ serial number(s) | |

# OPERATING INSTRUCTIONS

Dear customer,

Thank you very much for purchasing a safety storage cabinet from our company, with which you have made a decisive investment in the safety within your company.
Our safety storage cabinets make the storage of hazardous materials at the workplace safe and convenient for you.

Please read these operating instructions very carefully. Get to know the advantages and simple operability of our safety storage cabinets in detail.
This simplifies the daily handling of hazardous materials for you.

Many thanks.

Your asecos team

EN

## TABLE OF CONTENTS


1. NOTES · GUIDELINES · GUARANTEE . . . . . 6
   - 1.1. General safety notes . . . . . 6
   - 1.2. Guarantee. . . . . 6
   - 1.3. Cabinet details . . . . . 6
2. TRANSPORT . . . . . 7
3. ERECTION · COMMISSIONING · FUNCTION . . . . . 7
   - 3.1. Alignment of the cabinets . . . . . 7
   - 3.2. Anti-tilt device . . . . . 7
4. TYPES OF CLOSING · LOCKING. . . . . 8
5. INTERIOR FITTINGS: C-LINE · E-LINE · SL-LINE . . . . . 8
   - 5.1. Shelves . . . . . 8
   - 5.2. Spill containment sump . . . . . 9
6. INTERIOR FITTINGS: G-OD . . . . . 9
   - 6.1. Mounting rails . . . . . 9
   - 6.2. Cylinder retainer. . . . . 9
   - 6.3. Rolling ramp (optional) . . . . . 9
   - 6.4. Side cylinder retainer (optional) . . . . . 10
   - 6.5. Shelf (optional) . . . . . 10
   - 6.6. Pipe / cable lead-through . . . . . 10
7. VENTILATION . . . . . 10
   - 7.1. Overview . . . . . 10
   - 7.2. Ventilation connection . . . . . 11
8. FIRE · DISPOSAL . . . . . 12
   - 8.1. Opening the Safety box after the fire . . . . . 12
   - 8.2. Disposal . . . . . 12
9. SAFETY CHECKS. . . . . 12

# 1. NOTES · GUIDELINES · GUARANTEE

## 1.1. GENERAL SAFETY NOTES

- Observe applicable statutes and regulations, and the notes in these operating instructions, when handling hazardous materials.
- Work on the electrical system is to be carried out only with the power turned off and only by qualified electricians – refer here to the regulations of the local electricity supply company.
- The on-site installation conditions are to be observed (e.g. bolting the cabinets to the building).
- The instructions of the supervisory engineering department must be followed.
- Observe accident prevention regulations and workplace ordinance.
- Ensure that necessary safety checks are only carried out by authorised staff using original spare parts.
- Only use the cabinet after having been properly instructed; access is to be forbidden to unauthorised persons.
- The pivoting area of the doors is to be kept free at all times; doors/drawers are to be kept closed.
- By assigning trained/authorised technical personnel you can prevent the malfunctions, damage and corrosion damage that result from inappropriate transport.
- Observe the upper limits for stored quantities, loading etc.
- Containers with a volume larger than that of the spill containment sump may not be placed inside the cabinet; spilt hazardous materials are to be collected immediately and removed.
- Vessels containing aggressive chemicals (acids/alkalis) are to be kept in special cabinets for acids and alkalis or on shelves for acids and alkalis as well as in cabinets with metal-free interior equipment.
- Sufficient technical ventilation must be ensured.
- Before storing such materials, check that the cabinet's surface is resistant to the chemicals.
- The storage of corrosive liquids or gases can affect the function of the shut-off equipment for the air supply and exhaust.
- Before the initial commissioning, the safety storage cabinet is to be examined by the user for possible damage.

## 1.2. GUARANTEE

The guarantee for this product is agreed between you (the customer) and your dealer (the seller). As the manufacturer, asecos guarantees the products listed in the operating instructions for a period of 24 months from the date of delivery. All model safety equipment are subject to a compulsory annual inspection by specialised staff authorised by the manufacturer. Otherwise the customer's guarantee claim against the manufacturer expires.

## 1.3. CABINET DETAILS

**A complete overview of the models can be found at the start of the operating instructions.**

**C-CLASSIC · CS-CLASSIC · CS-CLASSIC-G · CS-PHOENIX**
secure storage of chemicals in accordance with regulations (not for the storage of inflammable liquids)

**CS-CLASSIC-F · CS-CLASSIC-GF**
secure storage of chemicals in accordance with regulations, safety box for the storage of inflammable liquids, aerosol cans, etc

**CF-CLASSIC:** secure storage of chemicals and combustible liquids in accordance with the valid national regulations

**E-CLASSIC · E-PSM:** secure storage of liquids hazardous to the aquatic environment in accordance with regulations (not for the storage of inflammable liquids)

**E-CLASSIC-UF**
secure storage of liquids hazardous to the aquatic environment in accordance with regulations, safety box for the storage of inflammable liquids, aerosol cans, etc.

**E-CLASSIC-MF:** for the storage of consumables, tools etc., safety box for the storage of inflammable liquids, aerosol cans etc.

**SL-LINE:** secure storage of aggressive liquids in accordance with regulations (not for the storage of inflammable liquids)

**G-OD:** for maintaining a stock, emptying and storing pressurised gas cylinders in the open or inside buildings, in accordance with regulations.

**Cabinet data**
➡ Logbook
(included with the cabinet)

**Technical drawing**
➡ Appendix 1

**Technical data**
➡ Table in Appendix 2

## 2. TRANSPORT

**GENERAL**

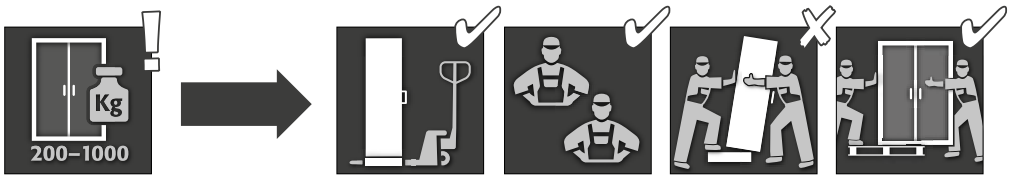


**CAUTION:**

Transport the cabinet in an upright position on a pallet truck, tied and secured against slipping, until the final place of installation is reached. Inappropriate transport can lead to concealed damage to the cabinet! We can only guarantee the necessary quality if the cabinet is transported to the place of its use by our specially trained staff.

**Written notification of any damage to the cabinet must be given immediatly!**

**Tilting the cabinet (may only be done without jolts)**

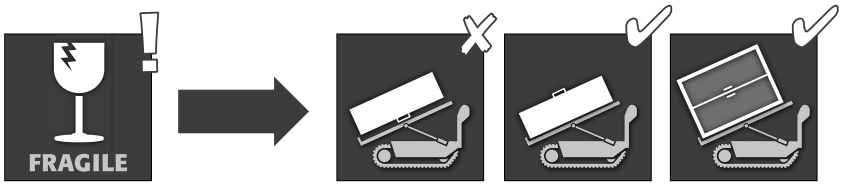


## 3. ERECTION · COMMISSIONING · FUNCTION

### 3.1. ALIGNMENT OF THE CABINETS

**GENERAL**

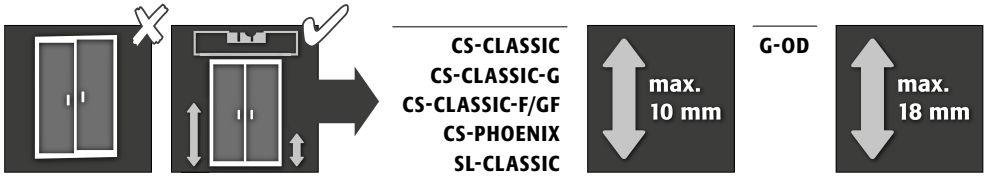

**CS-CLASSIC**
**CS-CLASSIC-G**
**CS-CLASSIC-F**
**CS-CLASSIC-GF**
**CS-PHOENIX**
**SL-CLASSIC**
**G-OD**

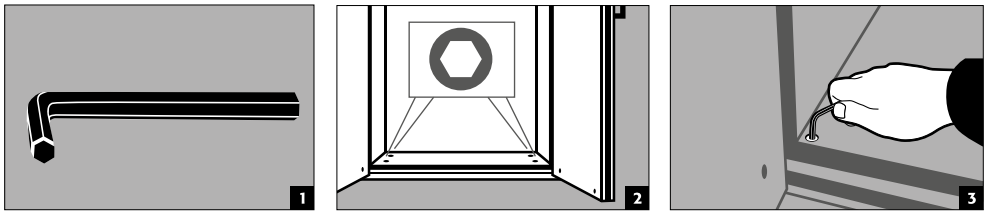


### 3.2. ANTI-TILT DEVICE

**SL-CLASSIC**
**C-LINE**
**E-LINE**

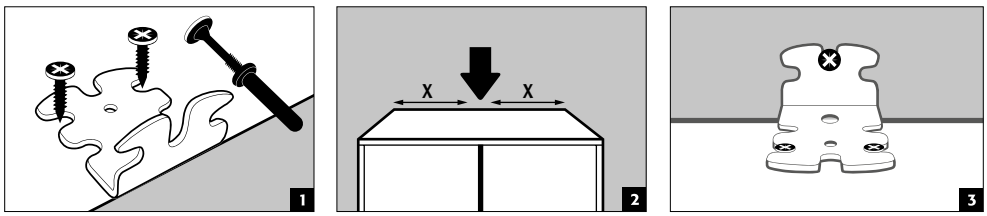




asecos

**G-OD**

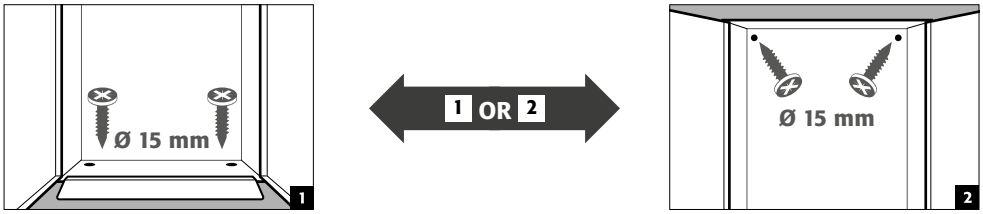


## 4. TYPES OF CLOSING · LOCKING

**CAUTION:**
Make sure that the door(s) are always closed again after use. The door is/doors are always locked by hand.

- the cabinets are lockable by means of safety cylinders

**SL-CLASSIC**
**G-OD (OPTIONAL)**

- are available with profile lock (G-OD optional)

## 5. INTERIOR FITTINGS: C-LINE · E-LINE · SL-LINE

### 5.1. SHELVES

**CAUTION:**
When adjusting the shelves, ensure that no containers are resting on the shelf so that they cannot be pushed over or damaged by the modification work in the cabinet.

**C-CLASSIC**
**CF-CLASSIC**
**E-LINE**

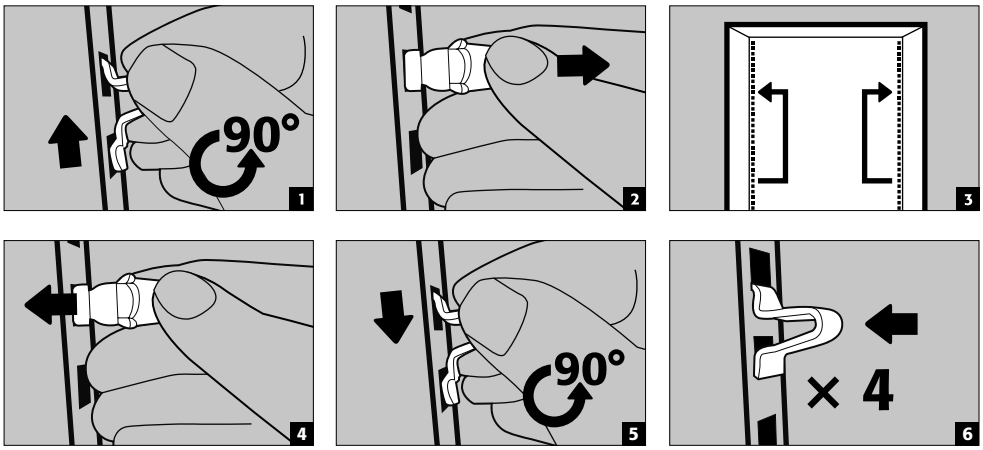


**CS-CLASSIC**
**CS-CLASSIC-G**
**CS-CLASSIC-F**
**CS-CLASSIC-GF**
**CS-PHOENIX**

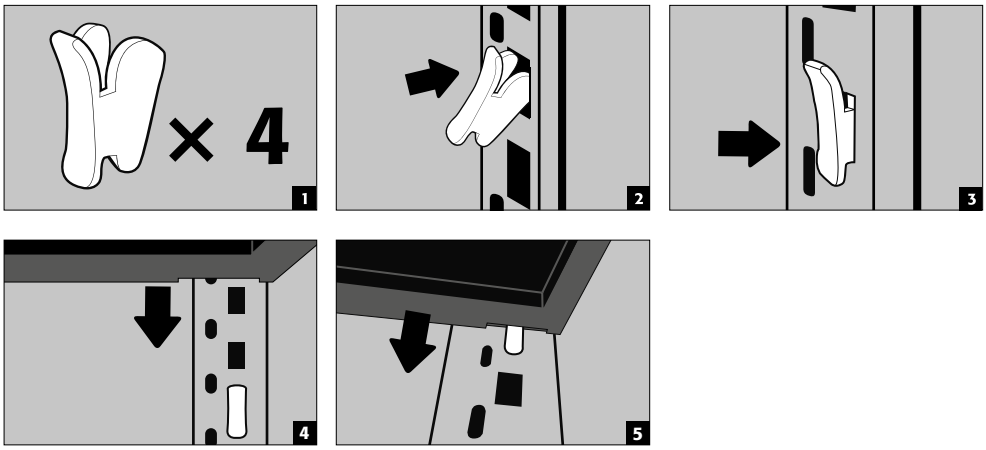

**SL-LINE**
**CS-CLASSIC**
**CS-CLASSIC-G**
**CS-PHOENIX**

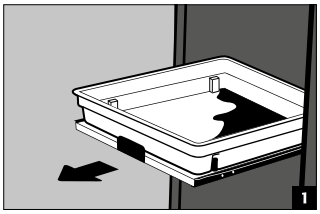

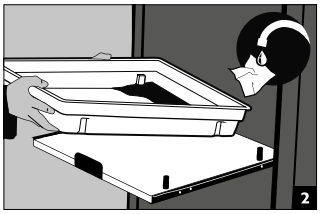

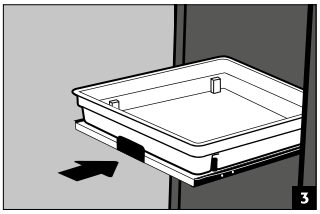


**CAUTION:**
The drawers are permanently installed in the cabinet and are fitted with drawer stops. They must be pushed into the cabinet by hand after use. Cabinets with drawers must be fastened to the wall by means of an anti-tipping device (see 3.2)!

EN

## 5.2. SPILL CONTAINMENT SUMP

**CAUTION:**
The individual volumes that can be collected can be found in the table of technical data in the appendix.

**C-LINE**
- It is the purpose of the spill containment sump to collect any liquids that might escape inside the cabinet.

**SL-LINE**
- Plastic sumps, impervious to liquids, at each storage level for trapping any liquid leaks

**E-CLASSIC**
**E-PSM**
- Insertable sumps, impervious to liquids, at each storage level for trapping any liquid leaks.

**E-CLASSIC-UF/MF**
**E-PSM-UF**
- Safety box additionally equipped with separate spill containment sump

# 6. INTERIOR FITTINGS: G-OD

## 6.1. MOUNTING RAILS

- for fittings for pressurised gases, height-adjustable

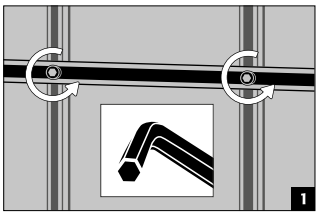

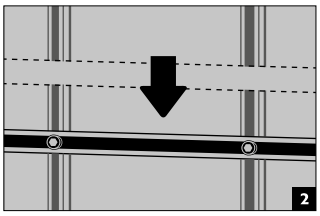

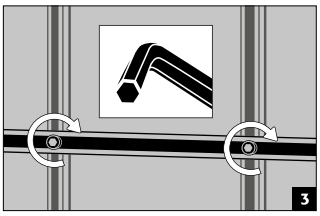


## 6.2. CYLINDER RETAINER

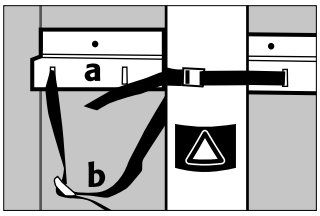


**a** permanently mounted on the rear wall

**b** tension belts for securing the gas cylinders

## 6.3. ROLLING RAMP (OPTIONAL)

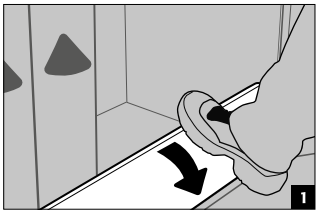

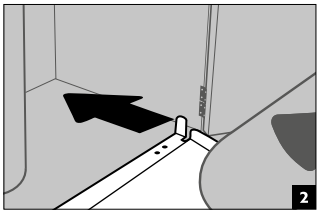

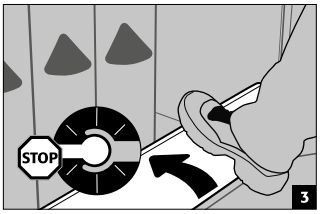

## 6.4. SIDE CYLINDER RETAINER (OPTIONAL)

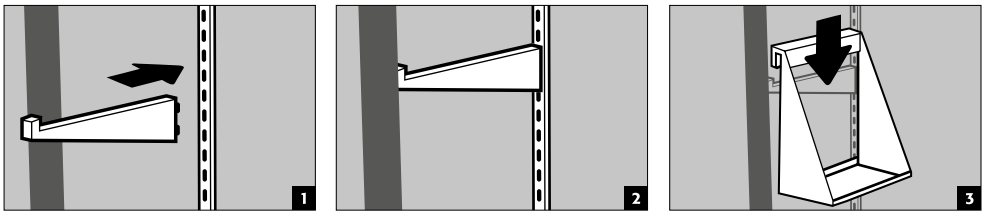


## 6.5. SHELF (OPTIONAL)

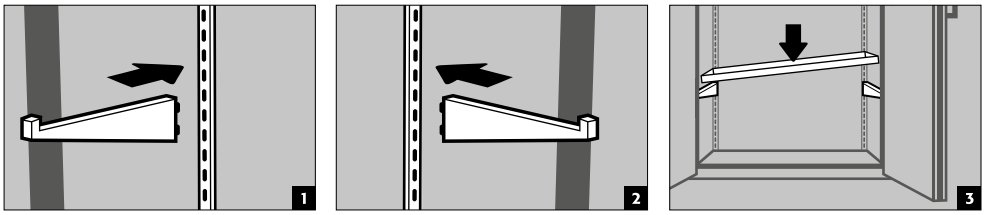


## 6.6. PIPE / CABLE LEAD-THROUGH

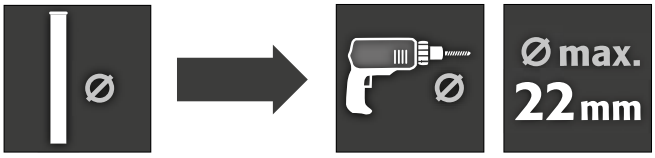


- prepared on top section

Pipe diameter < 20 mm

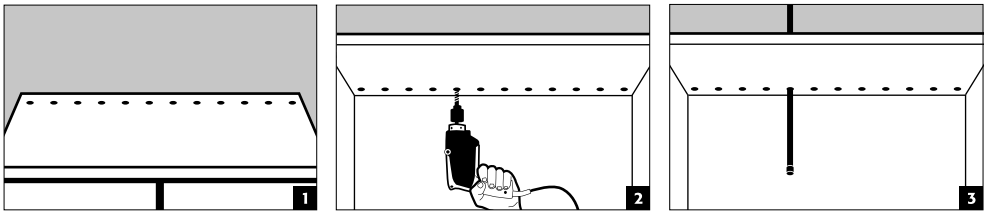


Pipe diameter = 20 mm

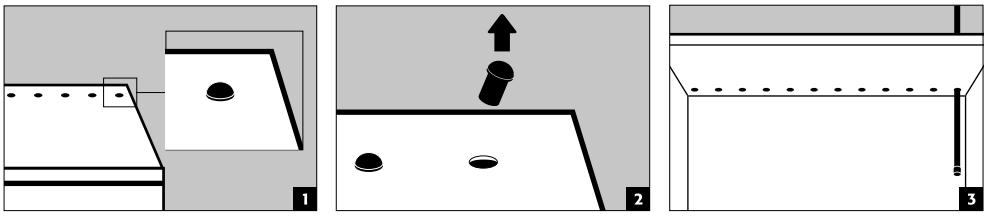


# 7. VENTILATION

## 7.1. OVERVIEW

| | not necessary | recommended | mandatory | !! NOTE !! |
|---|---|---|---|---|
| **C-LINE** | | When storing volatile chemicals | | **Observe national regulations** for prescribed air recirculation rate, max. pressure drops, exhaust air ducts! |
| **CF.195.095.F**<br>**CS.195.105.F · CS.195.105.F.WDFW** | | Safety box connection | | |
| **SL-LINE** | | | When storing aggressive substances | min. air recirculation rate 30x per hour,<br>**Observe national regulations** for prescribed air recirculation rate, max. pressure drops, exhaust air ducts! |
| **E-LINE** | | | | **Observe national regulations** for prescribed air recirculation rate, max. pressure drops, exhaust air ducts! |
| **E-CLASSIC-UF/MF · E-PSM-UF** | | Safety box connection | | |
| **G-LINE** | | | When installed in buildings | **Observe national regulations** for prescribed air recirculation rate, max. pressure drops, exhaust air ducts! |

## 7.2. VENTILATION CONNECTION

**C-LINE**
**(EXCEPT CF.195.095.F)**

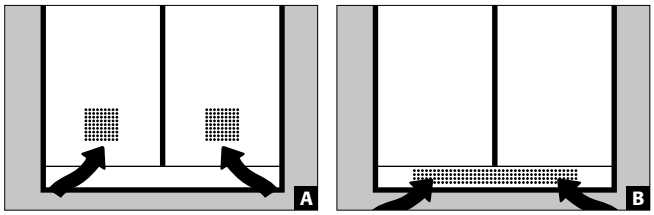


**A** C-CLASSIC
CF-CLASSIC

**B** CS-CLASSIC
CS-CLASSIC-G
CS-CLASSIC-F
CS-CLASSIC-GF
CS-PHOENIX

**Supply air**

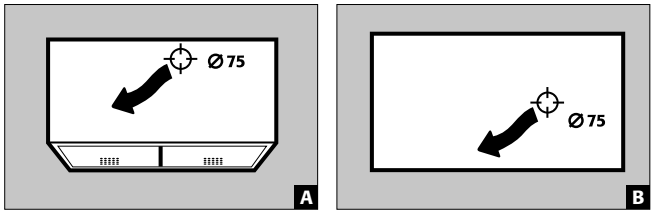


**A** C-CLASSIC
CF-CLASSIC
CS-CLASSIC
CS-CLASSIC-F
CS-CLASSIC-GF
CS-CLASSIC-G
CS-PHOENIX

**B** C-CLASSIC-UB

**Exhaust air**

**SL-LINE**

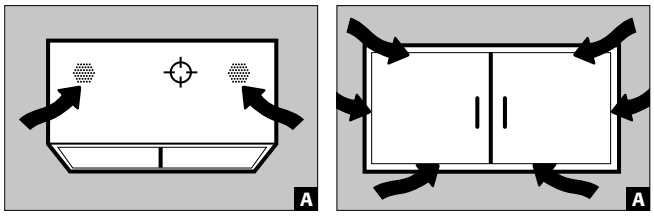


**A** SL-CLASSIC

**B** SL-CLASSIC-UB

**Supply air**

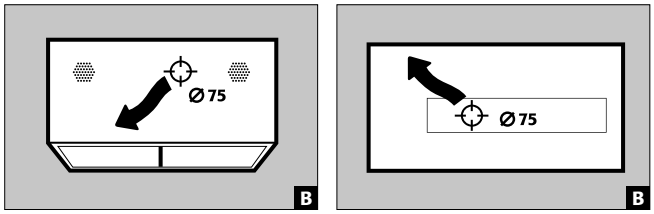


**A** SL-CLASSIC

**B** SL-CLASSIC-UB

**Exhaust air**

**SAFETY BOX:**
**E-CLASSIC-UF**
**E-CLASSIC-MF**
**E-PSM-UF**

**CF.195.095.F**

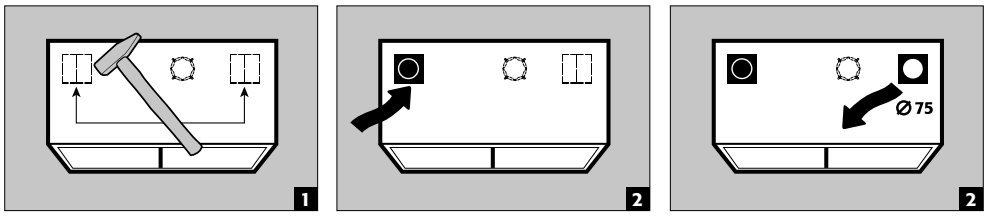


**Supply air** **Exhaust air**

**E-CLASSIC**
**E-PSM**

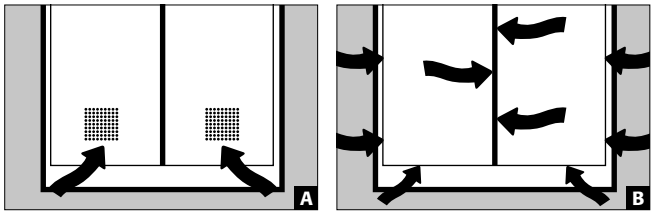


**A** E-PSM

**B** E-CLASSIC

**Supply air**

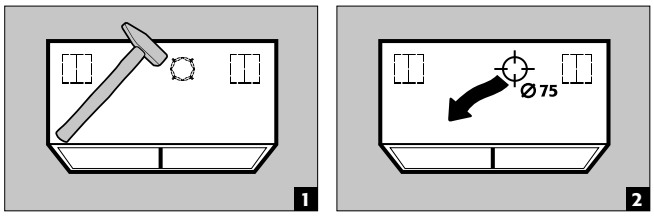


**Exhaust air**

EN

**G-OD**

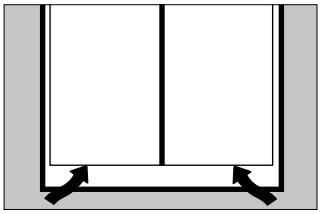

**Supply air**

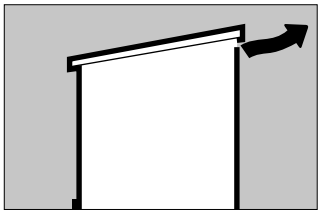

**Exhaust air**

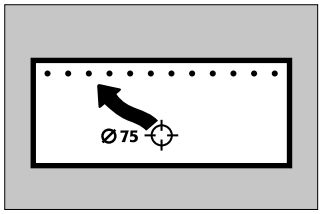


**Exhaust air (optional)**

# 8. FIRE · DISPOSAL

## 8.1. OPENING THE SAFETY BOX AFTER THE FIRE

**CAUTION:**
Depending upon the duration of the fire an ignitable vapour/air mixture may have formed; therefore remove all sources of ignition within a 10 metre radius of the cabinet before opening it.

- use only spark-free tools
- open the cabinets with extreme caution

## 8.2. DISPOSAL

Die Modelle können zerlegt sortenrein der Entsorgung zugeführt werden. Sie sind frei von Materialien, die dem Sondermüll zugeführt werden müssten.

# 9. SAFETY CHECKS

**ALL MODELS**

The cabinets are designed and built in such a way that no significant servicing is required. If safety-relevant damage (such as to the seals in acid and alkali cabinets) is found, the operator must ensure that original parts are used to restore the cabin to good order before it is used again. In order to check the evacuation, take a light piece of fluff or a smoke tube, and check that you can observe a draught inside the cabinet in the area of the outlet opening (on the right of the cabinet or at the rear wall).

**SAFETY BOX**

**Daily functional check**
- applies to the spill containment sumps (collect and remove any leakages)

**monthly functional check**
- perfect function of the doors
- correct seating and condition of the fire protection seals

In the event of damage, please contact your dealer immediately so that the manufacturer can repair the safety box with tested original parts.

**CONTACT:**
In the case of defects or complaints about our products (within and also after the warranty period), and for requesting safety checks or taking out a service contract, please contact our service hotline on:

**Tel: +44 1785 22 70-90** **info@asecos.co.uk**

## C-LINE

C.195.120
CF.195.120:0004
CF.140.120:0005

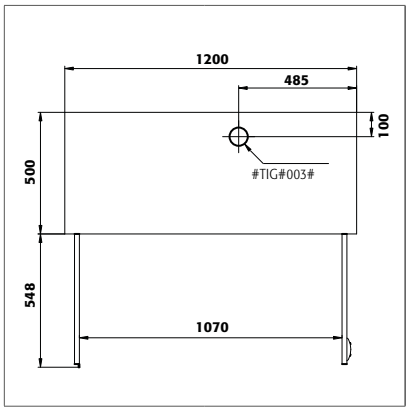


C.195.060
CF.140.060.R:0005
C.195.060.R
CF.195.060.R:0004

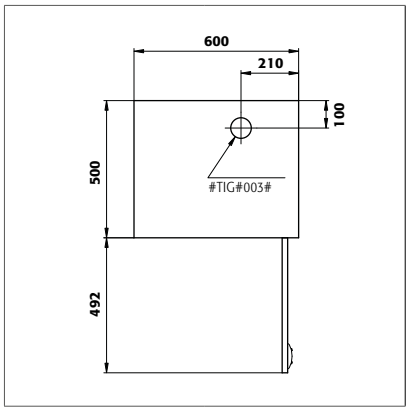


C.060.110.UB

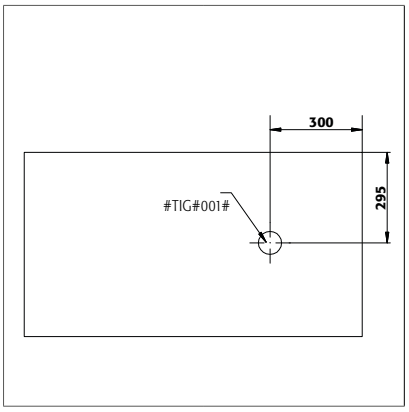


CF.140.095:0005
CF.195.095:0004

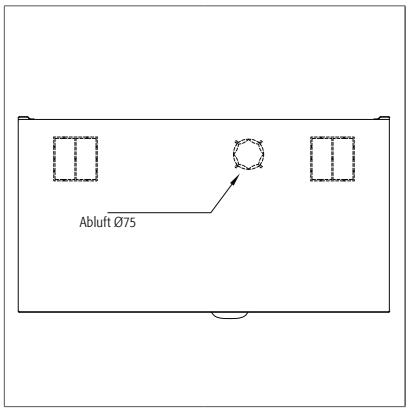


CF.195.095.F:0005

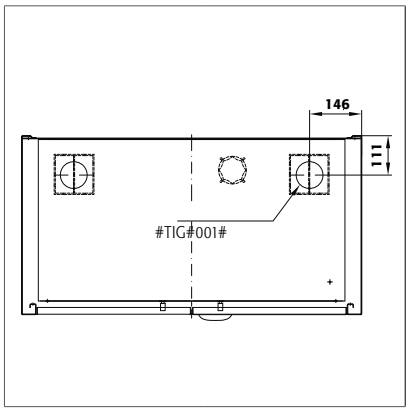


CS.195.105.F
CS.195.105.FWDFW

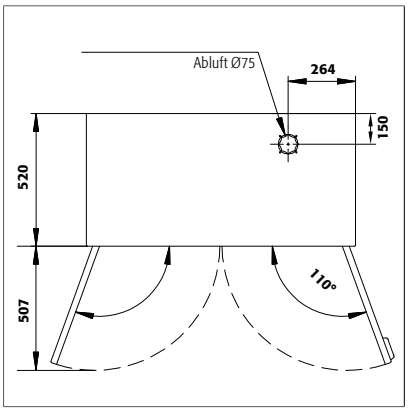


CS.110.105
CS.110.105.WDFW:0002
CS.195.105
CS.195.105.WDFW
CS.195.105:0003
CS.110.105.WDFW
CS.110.105:0002
CS.195.105.MM.4WD
CS.195.105.WDFW:0003

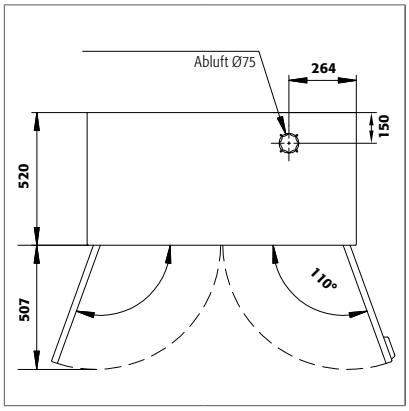


CS.110.081
CS.195.081
CS.110.081.WDFW
CS.195.081.WDFW

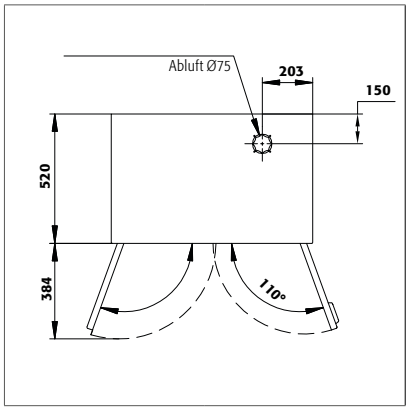


CS.110.054
CS.110.054.WDFW
CS.195.054
CS.195.054.R
CS.195.054.WDFW:0401
CS.195.054:0402
CS.110.054.R
CS.110.054.WDFWR
CS.195.054.MH.3WDR
CS.195.054.WDFW
CS.195.054.WDFWR
CS.195.054:0404

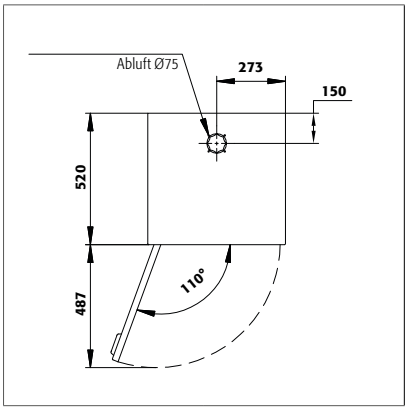


CS.110.105.FD
CS.195.105.FD

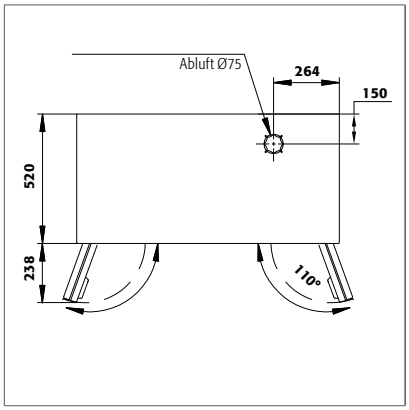

# E-LINE

E.195.095.F
EM.195.095.F
E.195.095.F2

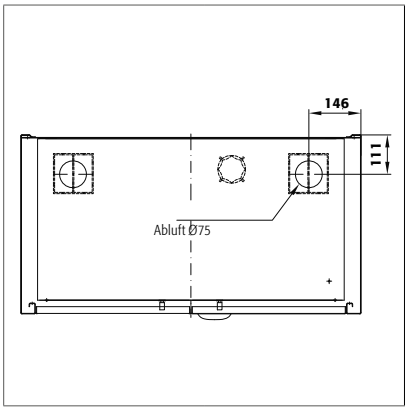


E.140.095
E.195.095
EP.195.095
E.140.095.2
E.195.095.2
EP.195.095.2

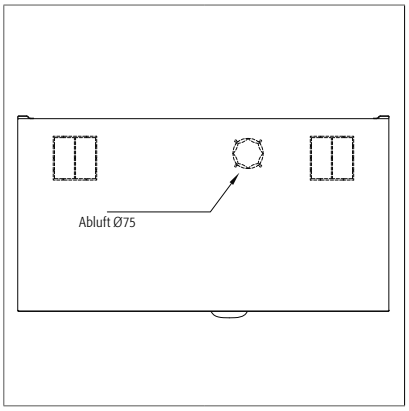


# SL-LINE

SL.196.120.MV

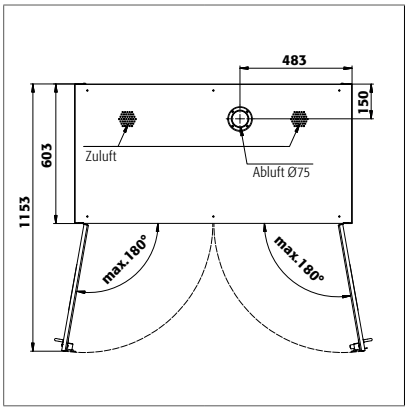


SL.196.120.MV.WDC

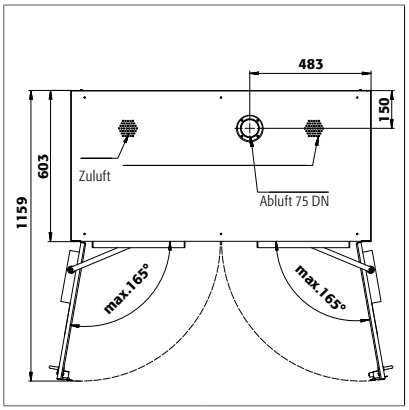


SL.196.060.MH
SL.196.060.MH.R

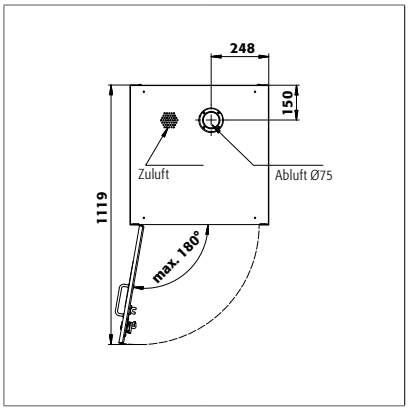


SL.060.140.UB.3T

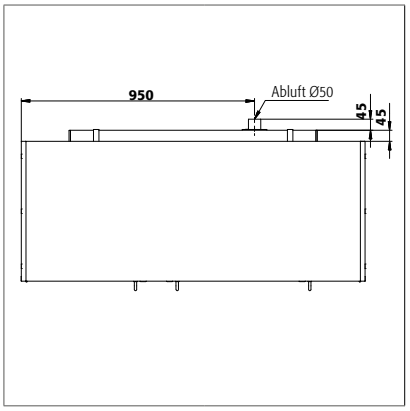


SL.060.110.UB.2T

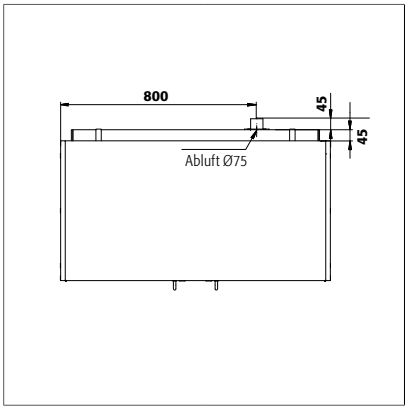


SL.080.110.UB.2T

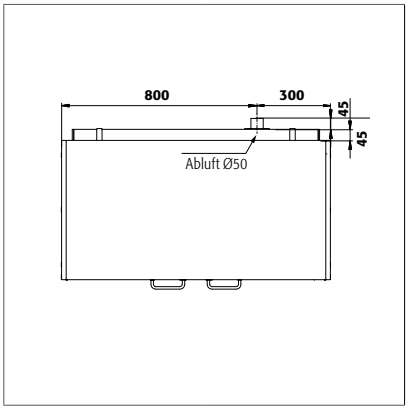


SL.080.110.UB.2TC

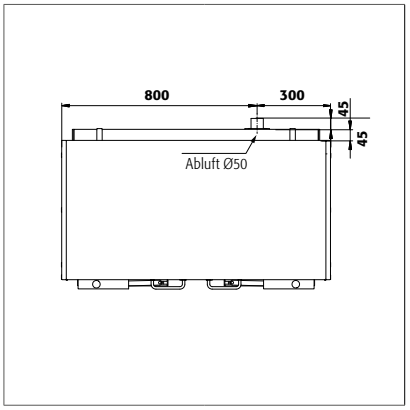

SL.080.059.UB.TCR

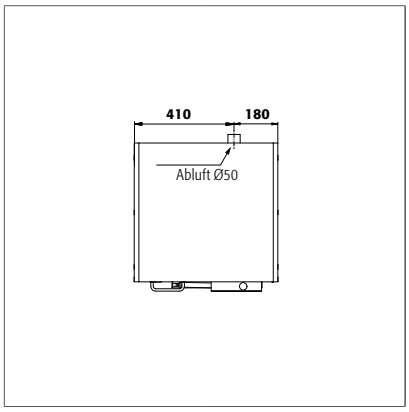


SL.080.059.UB.TR

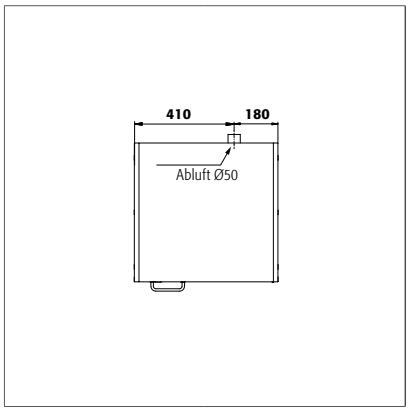


SL.060.059.UB.T
SL.060.059.UB.TR
SL.060.059.UB.T:0001
SL.060.059.UB.TR:0001

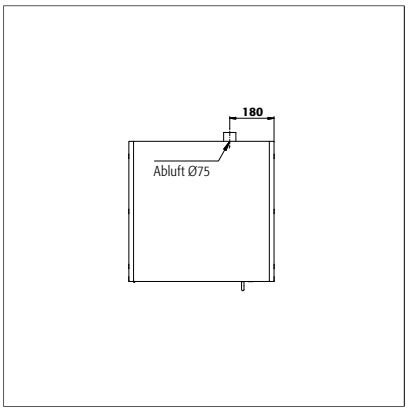


D

## G-LINE

GOD.215.135
GOD.215.135.WDHW
GOD.215.135.WDFW

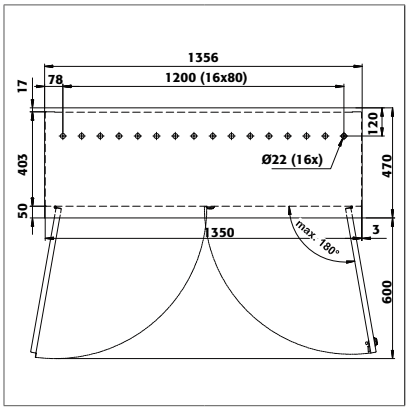


GOD.215.100
GOD.215.100.WDHW
GOD.215.100.WDFW

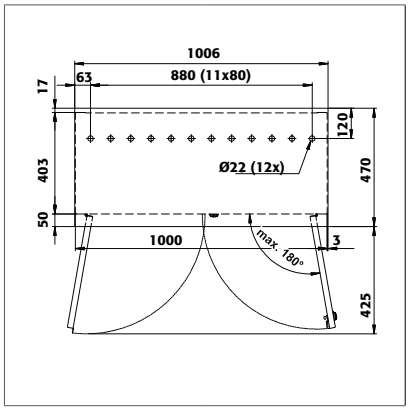


GOD.215.070.R
GOD.215.070.WDHWR
GOD.215.070.WDFWR

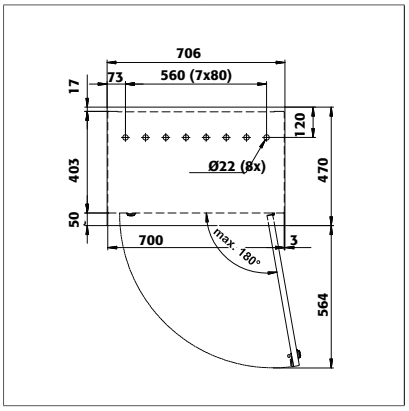




asecos

# APPENDIX 2: TECHNICAL DATA

Legende für Tabelle „Technische Daten“
Key for “Technical data” table
Legende voor tabel „Technische gegevens“

Légende du tableau « Caractéristiques techniques »
Leyenda de la tabla “Datos técnicos“
Legenda per tabella "Dati tecnici"
Legenda para a tabela "Dados técnicos"

| | | | | | | | | |
|---|---|---|---|---|---|---|---|---|
| | (mm) | Abmessungen | Dimensions | Afmetingen | Dimensions | Dimensiones | Dimensioni | Dimensões |
| | (kg) | Leergewicht gesamt | Net Weight | Leeggewicht totaal | Poids total à vide | Peso en vacío total | Peso a vuoto completo | Peso total em vazio |
| | (kg) | Max. Belastung | max. Load Cabinet | max. belading | Chargement max. | Carga máx | Carico max. | Carga máx. |
| | (kg) | Max. Belastung Fachboden | max. Load Shelf | max. belasting opvanglegbord | Charge max. d’étagère | Carga máx. bandeja | Carico max. ripiano fisso | Carga máx. da prateleira |
| | (kg) | Max. Belastung Auszug | max. Load Drawer | max. belasting schuiflade | Charge max. de tiroir | Carga máx. cajón | Carico max. cassetto | Carga máx. do extrato |
| | (l) | Auffangvolumen Bodenauffangwanne | Capacity Bottom collecting sump | Opvangcapaciteit bodemopvangbak | Volume de rétention de bac de rétention | Volumen de recogida del cubeto de retención | Volume di raccolta vasca di raccolta sul fondo | Volume de recolha da bacia de retenção inferior |
| | ($m^3$/h, Pa) | Volumen und Druckverlust bei 10fachem Luftwechsel | Air flow and Pressure Loss at 10times Air change | volume en drukverlies bij 10-voudige luchtverversing | volume et perte de pression avec un taux de renouvellement de l’air de 10 | Volumen y caída de presión con renovación de aire de 10 veces | Volume e perdita di pressione con decuplo cambio dell'aria | Volume e perda de pressão até 10 vezes a renovação de ar |
| | ($m^3$/h, Pa) | Volumen und Druckverlust bei 120fachen Luftwechsel | Air flow and Pressure Loss at 120times Air change | volume en drukverlies bij 120-voudige luchtverversing | volume et perte de pression avec un taux de renouvellement de l’air de 120 | Volumen y caída de presión con renovación de aire de 120 veces | Volume e perdita di pressione con centoventesimo cambio dell'aria | Volume e perda de pressão até 120 vezes a renovação de ar |

| | X | Y | Z | | | | | | m³ | Pa | m³ | Pa |
|---|---|---|---|---|---|---|---|---|---|---|---|---|
| C.195.120 | 1202 | 500 | 1950 | 55 | 300 | 30 | – | 33 | 9,7 | <2 | – | – |
| C.195.060(.R) | 602 | 500 | 1950 | 36 | 300 | 30 | – | 19 | 4,9 | <1 | – | – |
| C.060.110 | 1102 | 500 | 600 | 21 | 200 | 30 | – | 29 | 2,1 | <1 | – | – |
| CF.195.120 | 1202 | 500 | 1950 | 55 | 300 | 30 | – | 33 | 9,7 | <2 | – | – |
| CF.195.095 | 952 | 500 | 1950 | 52 | 300 | 30 | – | 20 | 7,7 | <2 | – | – |
| CF.195.095.F | 952 | 500 | 1950 | 52+ | 300 | 30 | – | 20 | 7,7 | <2 | – | – |
| Sicherheitsbox F30 | 850 | 450 | 450 | 55,5 | 150 | 30 | – | 5,8 | 1,4 | <1 | – | – |
| CF.195.060 | 602 | 500 | 1950 | 36 | 300 | 30 | – | 19 | 4,9 | <1 | – | – |
| CF.140.120 | 1202 | 500 | 1400 | 41 | 200 | 30 | – | 33 | 6,7 | <1 | – | – |
| CF.140.095 | 952 | 500 | 1400 | 37 | 200 | 30 | – | 20 | 5,3 | <1 | – | – |
| CF.140.060 | 602 | 500 | 1400 | 32 | 200 | 30 | – | 19 | 3,3 | <1 | – | – |
| CS.195.105(.FD/.WDFW) | 1055 | 520 | 1950 | 75 | 600 | 100 | 30 | 33 | 9,0 | <2 | – | – |
| CS.195.081(.WDFW) | 810 | 520 | 1950 | 68 | 600 | 60 | 30 | 33 | 6,8 | <1 | – | – |
| CS.195.054(.WDFW[R]) | 545 | 520 | 1950 | 51 | 600 | 50 | 30 | 22 | 4,4 | <1 | – | – |
| CS.195.105.MM.4WD | 1055 | 520 | 1950 | 75 | 600 | 50 | 30 | 22 | 9,0 | <2 | – | – |
| CS.195.054.MH.3WD | 545 | 520 | 1950 | 51 | 600 | 50 | 30 | 22 | 4,4 | <1 | – | – |
| CS.195.105.F(.WDFW) | 1055 | 520 | 1950 | 75+ | 600 | 100 | 30 | 33 | 9,0 | <2 | – | – |
| Sicherheitsbox F30 | 978 | 455 | 450 | 62,5 | 150 | 25 | – | 6 | 1,6 | <1 | – | – |
| CS.110.105(.FD/.WDFW) | 1055 | 520 | 1105 | 48 | 400 | 100 | 30 | 33 | 4,9 | <1 | – | – |
| CS.110.081(.WDFW) | 810 | 520 | 1105 | 41 | 400 | 60 | 30 | 33 | 3,7 | <1 | – | – |
| CS.110.054(.WDFW[R]) | 545 | 520 | 1105 | 31 | 400 | 50 | 30 | 22 | 2,4 | <1 | – | – |
| E.195.095(.2) ■ EP.195.095 | 950 | 520 | 1950 | 52 | 300 | 50 | – | 20 | 7,1 | <1 | – | – |
| E.140.095 | 950 | 520 | 1400 | 43 | 300 | 50 | – | 20 | 4,9 | <1 | – | – |
| E.195.095.F(2) ■ EP.195.095.F(2) | 950 | 500 | 1950 | 52+ | 300 | 50 | – | 20 | 5,0 | <5 | – | – |
| Sicherheitsbox F30 | 850 | 450 | 450 | 55,5 | 150 | 30 | – | 5,8 | 1,4 | <1 | – | – |
| EM.195.095.F | 950 | 500 | 1950 | 52+ | 300 | 50 | – | 20 | 5,0 | <5 | – | – |
| Sicherheitsbox F30 | 850 | 450 | 450 | 55,5 | 150 | 30 | – | 5,8 | 1,4 | <1 | – | – |
| SL.196.120.MV | 1200 | 605 | 1970 | 160 | 200 | – | 25 | – | – | – | 31 | <56 |
| SL.196.120.MV.WDC | 1200 | 605 | 1970 | 160 | 200 | – | 25 | – | – | – | 31 | <56 |
| SL.196.060.MH(.R) | 600 | 605 | 1970 | 125 | 200 | – | 25 | – | – | – | 24,6 | <40 |
| SL.196.060.MH.WDC | 600 | 605 | 1970 | 125 | 200 | – | 25 | – | – | – | 24,6 | <40 |
| SL.080.110.UB.2TC | 1100 | 570 | 800 | 73 | 100 | – | 25 | – | – | – | 6 | <10 |
| SL.080.059.UB.TCR | 590 | 570 | 800 | 48 | 100 | – | 25 | – | – | – | 6 | <10 |
| SL.060.140.UB | 1400 | 570 | 600 | 80 | 100 | – | 25 | – | – | – | 8,8 | <10 |
| SL.060.110.UB | 1100 | 570 | 600 | 60 | 100 | – | 25 | – | – | – | 8,8 | <10 |
| SL.060.059.UB(.R) | 590 | 570 | 600 | 40 | 100 | – | 25 | – | – | – | 4,4 | <5 |
| GOD.215.135(.WDFW/WDHW) | 1350 | 400 | 2150 | 138 | 600 | 75 | – | – | 10,3 | <5 | – | – |
| GOD.215.100(.WDFW/WDHW) | 1000 | 400 | 2150 | 113 | 600 | 75 | – | – | 7,6 | <5 | – | – |
| GOD.215.070(.WDFW[R]/ WDHW[R]) | 700 | 400 | 2150 | 85 | 600 | 75 | – | – | 5,3 | <5 | – | – |

asecos GmbH
Abt. Kundendienst
Weiherfeldsiedlung 16-18
D-63584 Gründau

Fax: +49 60 51 – 92 20-10

**www.asecos.com**

Ihr Fachhändler:

Your partner:

Uw partner:

Votre partenaire :

Su distribuidor:

su richiesta: