Overview: model class G-OD

Safe and approved outdoor storage of flammable or toxic gases – for up to 5 x 50-litre gas cylinders

Robust, high-quality construction

- perfect for the installation in outside areas
- completely galvanised sheet steel construction with plastic laminated structured surface
- stainless steel base
- sloping roof with supernatant allows water to drain

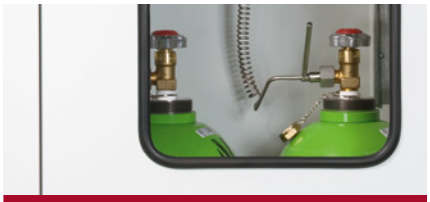

Door variations

- folding doors with large opening angle
- doors also available with fixed or hinged window – all fittings at a glance, even with doors closed

Maximum storage volume

- for up to five 50-litres pressurised gas cylinders

Further features of this model class

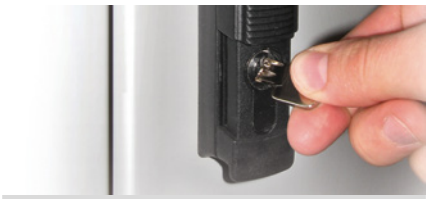

Locking

- solid 3-point locking with lockable turning lever (also available as profile cylinder lock, cabinets can be integrated by the customer in an existing master key system)

Ventilation

- effective ventilation through openings beneath the doors and at the rear wall

Comfortable adjusting possibilities

- integrated adjusting aids in the cabinet base ensure a fast and effective compensation for uneven floor of up to 10 mm

Possible interior equipment

- **standard interior equipment** complete with mounting rails, cylinder retainer and matching tension belts

- **rolling ramp** simple rolling in and removal of the gas cylinders

- **lateral cylinder retainer** for two 10-litre cylinders, height-adjustable version (no tools required)

- **shelves** height-adjustable version (no tools required), load capacity 75 kg

Safety storage cabinets for the storage of pressurised gas cylinders in outdoor areas according to TRGS 510

Safe and approved outdoor storage of flammable or toxic gases – for up to 5 x 50-litre gas cylinders

Function / construction:

- **robust construction and longevity:** completely galvanised and powder-coated structured surface and stainless steel base
- **no unauthorised use:** lockable turning lever (doors also available with profile cylinder, compatible for locking system)
- **easy alignment:** adjusting aids to compensate for uneven floor
- **easy mounting of connecting pipes and gas fittings:** lead-through points in the ceiling of the cabinet
- **ventilation:** effective ventilation through openings beneath the doors and at the rear wall

Available equipment

- shelf – across the entire width of the cabinet (load capacity 75 kg), height adjustable without tools
- standard interior equipment – complete with mounting rails, cylinder retainer and matching tension belts
- lateral cylinder retainer – height adjustable (no tools required), distributed load 55 kg
- rolling ramp – simple rolling in and removal of the gas cylinders
- window – optionally available as fixed or hinged version

Gas cylinder cabinet
G-OD model GOD.215.135
in Light grey (RAL 7035), with standard interior equipment for 5 x 50 litre gas cylinders
Order No. 30692-015 1
(rolling ramp optional)

Fixed window
All stored gas cylinders at a glance even with doors closed

Shelf
Can be installed over the whole width of the cabinet, optionally available and height adjustable without tools

Lateral cylinder retainer
For 10-litre cylinder, height adjustable without tools

Lockable turning lever with profile cylinder lock (optional)
The cabinet can be integrated into a locking system

Front view

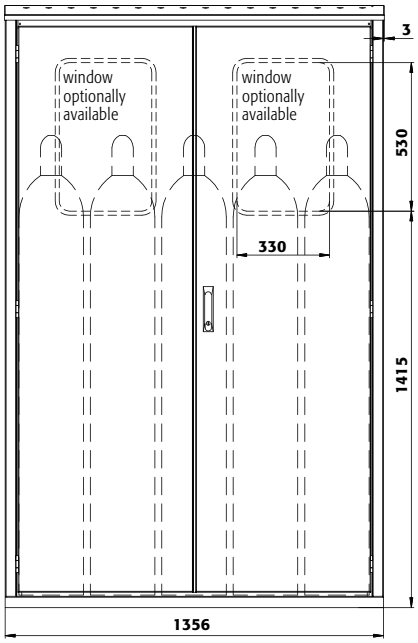

Side view

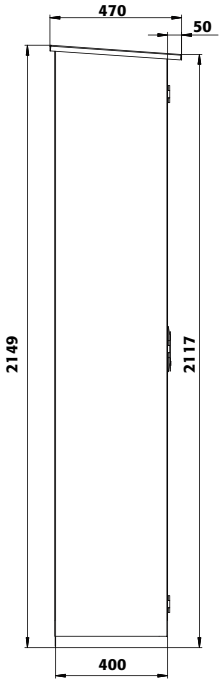

Top view

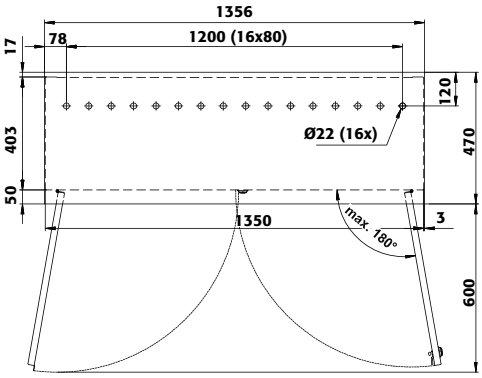

Technical data

External dimensions W x D x H	mm	1356 x 400 x 2149
Internal dimensions W x D x H	mm	1345 x 370 x 2070
Weight without interior equip.	kg	138
Extraction air	DN	75
Air change **10 times**	m³/h	10
Maximum load	kg	600
Distributed load	kg/m²	390

Gas cylinder cabinet
G-OD model GOD.215.135.WDFW
in Light grey (RAL 7035), with fixed window and standard interior equipment for 5 x 50 litre gas cylinders
Order No. 30730-015 4
(lockable turning lever with cylinder lock optional)

Order example - how to order correctly

30730 — 015

Model	Information / equipment	Order No.
GOD.215.135	with standard interior equipment for 5 x 50 litre gas cylinders	30692
GOD.215.135.WDFW	with fixed window and standard interior equipment for 5 x 50 litre gas cylinders	30730
GOD.215.135.WDHW	with hinged window and standard interior equipment for 5 x 50 litre gas cylinders	30731

Body colour	Door colour	Order No.
Light grey RAL 7035	Light grey RAL 7035	015 1

Interior equipment	Material	W x D x H (mm)	1)	2)	3)	Order No.
extraction air outlet, with flange	PP					30791 4
rack system, for installation of various cabinets in a row						30792 4
shelf	sheet steel powder-coated RAL 7035	1340 x 340 x 35	75.00			30694 2
rolling ramp	sheet steel coated black	1200 x 220 x 50				30693 2
cylinder retainer on the sidewall, height adjustable without tools	sheet steel powder-coated RAL 7035	312 x 183 x 450*				30695 2
handle, version turning lever with profile cylinder locking	polyamide					30790 4
document holder, DIN A5	polystyrene					30793 2

* W x D usable storage space / 1) load capacity (kg), 2) capacity (litres), 3) maximum container volume inside the cabinet (litres)

Safe and approved outdoor storage of flammable or toxic gases – for up to 3 x 50-litre gas cylinders

Function / construction:

- **robust construction and longevity:** completely galvanised and powder-coated structured surface and stainless steel base
- **no unauthorised use:** lockable turning lever (doors also available with profile cylinder, compatible for locking system)
- **easy alignment:** adjusting aids to compensate for uneven floor
- **easy mounting of connecting pipes and gas fittings:** lead-through points in the ceiling of the cabinet
- **ventilation:** effective ventilation through openings beneath the doors and at the rear wall

Available equipment

- shelf – across the entire width of the cabinet (load capacity 75 kg), height adjustable without tools
- standard interior equipment – complete with mounting rails, cylinder retainer and matching tension belts
- lateral cylinder retainer – height adjustable (no tools required), distributed load 55 kg
- rolling ramp – simple rolling in and removal of the gas cylinders
- window – optionally available as fixed or hinged version

Gas cylinder cabinet
G-OD model GOD.215.100
in Light grey (RAL 7035), with standard interior equipment for 3 x 50 litre gas cylinders
Order No. 30697-015 1

Rolling ramp
Optionally available, mounted in the safety storage cabinet

Shelf
Can be installed over the whole width of the cabinet, optionally available and height adjustable without tools

Adjusting aids
To compensate for uneven floor and an easy alignment

Lateral cylinder retainer
height adjustable without tools

Lockable turning lever with profile cylinder lock (optional)
The cabinet can be integrated into a locking system

Front view

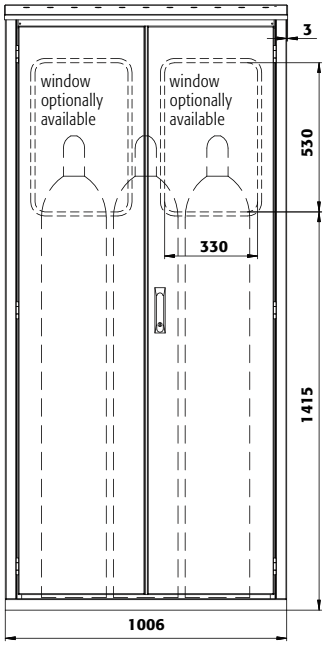

Side view

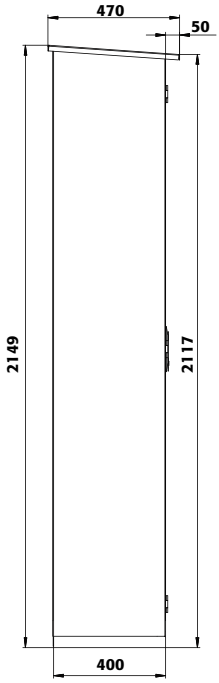

Top view

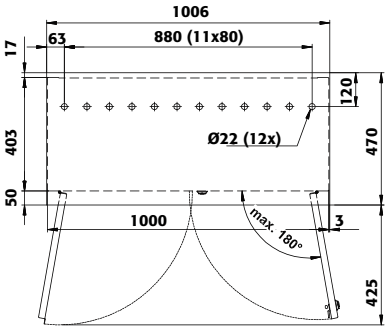

Technical data

External dimensions W x D x H	mm	1006 x 400 x 2149
Internal dimensions W x D x H	mm	995 x 370 x 2070
Weight without interior equip.	kg	113
Extraction air	DN	75
Air change **10 times**	m³/h	8
Maximum load	kg	600
Distributed load	kg/m²	509

Gas cylinder cabinet
G-OD model GOD.215.100.WDFW
in Light grey (RAL 7035), with fixed window and standard interior equipment for 3 x 50 litre gas cylinders
Order No. 30732-015 4
(lockable turning lever with cylinder lock optional)

Order example - how to order correctly

30732 – 015

Model	Information / equipment	Order No.
GOD.215.100	with interior equipment for 3 x 50 litre gas cylinders	30697
GOD.215.100.WDFW	with fixed window and standard interior equipment for 3 x 50 litre gas cylinders	30732
GOD.215.100.WDHW	with hinged window and standard interior equipment for 3 x 50 litre gas cylinders	30735

Body colour	Door colour	Order No.
Light grey RAL 7035	Light grey RAL 7035	015 6

Interior equipment	Material	W x D x H (mm)	1)	2)	3)	Order No.
extraction air outlet, with flange	PP					30791 4
rack system, for installation of various cabinets in a row						30792 4
shelf	sheet steel powder-coated RAL 7035	990 x 340 x 35	75.00			30699 2
rolling ramp	sheet steel coated black					30698 2
cylinder retainer on the sidewall, height adjustable without tools	sheet steel powder-coated RAL 7035	312 x 183 x 450*				30695 2
handle, version turning lever with profile cylinder locking	polyamide					30790 4
document holder, DIN A5	polystyrene					30793 2

* W x D usable storage space / 1) load capacity (kg), 2) capacity (litres), 3) maximum container volume inside the cabinet (litres)

Safe and approved outdoor storage of flammable or toxic gases – for up to 2 x 50-litre gas cylinders

Function / construction:

- **robust construction and longevity:** completely galvanised and powder-coated structured surface and stainless steel base
- **no unauthorised use:** lockable turning lever (door also available with profile cylinder, compatible for locking system)
- **easy alignment:** adjusting aids to compensate for uneven floor
- **easy mounting of connecting pipes and gas fittings:** lead-through points in the ceiling of the cabinet
- **ventilation:** effective ventilation through openings beneath the doors and at the rear wall

Available equipment

- shelf – across the entire width of the cabinet (load capacity 75 kg), height adjustable without tools
- standard interior equipment – complete with mounting rails, cylinder retainer and matching tension belts
- lateral cylinder retainer – height adjustable (no tools required), distributed load 55 kg
- rolling ramp – simple rolling in and removal of the gas cylinders
- window – optionally available as fixed or hinged version

Gas cylinder cabinet
G-OD model GOD.215.070.R
in Light grey (RAL 7035), with standard interior equipment for 2 x 50 litre gas cylinders
Order No. 30701-015 1
(rolling ramp optional)

Hinged window
Lockable with simple hasp locking

Shelf
Can be installed over the whole width of the cabinet, optionally available and height adjustable without tools

Rolling ramp
Optionally available, mounted in the safety storage cabinet

Lockable turning lever with profile cylinder lock (optional)
The cabinet can be integrated into a locking system

Front view

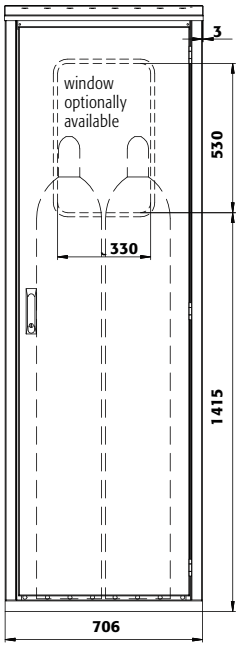

Side view

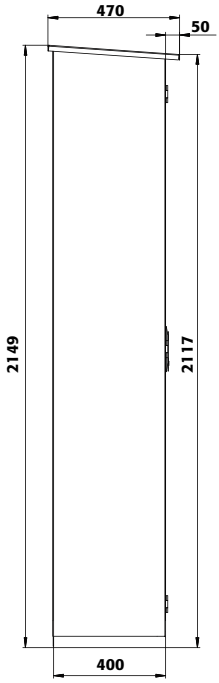

Top view

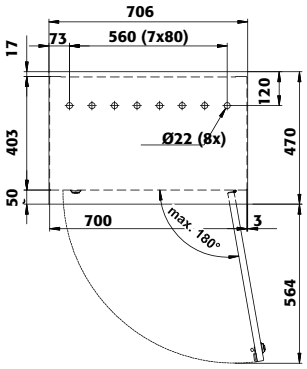

Technical data

External dimensions W x D x H	mm	706 x 400 x 2149
Internal dimensions W x D x H	mm	695 x 370 x 2070
Weight without interior equip.	kg	85
Extraction air	DN	75
Air change **10 times**	m³/h	5
Maximum load	kg	600
Distributed load	kg/m²	699

Gas cylinder cabinet
G-OD model GOD.215.070.WDFWR
in Light grey (RAL 7035), with fixed window and standard interior equipment for 2 x 50 litre gas cylinders
Order No. 30752-015 4
(lockable turning lever with cylinder lock optional)

Order example - how to order correctly

30752 — 015

Model	Information / equipment	Order No.
GOD.215.070.R	with interior equipment for 2 x 50 litre gas cylinders	30701
GOD.215.070.WDFWR	with fixed window and standard interior equipment for 2 x 50 litre gas cylinders	30752
GOD.215.070.WDHWR	with hinged window and standard interior equipment for 2 x 50 litre gas cylinders	30753

Body colour	Door colour	Order No.
Light grey RAL 7035	Light grey RAL 7035	015 1

Interior equipment	Material	W x D x H (mm)	1)	2)	3)	Order No.
extraction air outlet, with flange	PP					30791 4
rack system, for installation of various cabinets in a row						30792 4
shelf	sheet steel powder-coated	690 x 340 x 35				30703 2
rolling ramp	sheet steel coated black					30702 2
cylinder retainer on the sidewall, height adjustable without tools	sheet steel powder-coated RAL 7035	312 x 183 x 450*				30695 2
handle, version turning lever with profile cylinder locking	polyamide					30790 4
document holder, DIN A5	polystyrene					30793 2

* W x D usable storage space / 1) load capacity (kg), 2) capacity (litres), 3) maximum container volume inside the cabinet (litres)

Wolf Laboratories Limited

www.wolflabs.co.uk

Wolflabs

Tel: 01759 301142 Fax:01759 301143 sales@wolflabs.co.uk

Use the above details to contact us if this literature doesn't answer all your questions.

Pricing on any accessories shown can be found by keying the part number into the search box on our website.

The specifications listed in this brochure are subject to change by the manufacturer and therefore cannot be guaranteed to be correct. If there are aspects of the specification that must be guaranteed, please provide these to our sales team so that details can be confirmed.